Table 6-8. Machine Configuration Parameters

Configuration Digit	Parameter (Displayed on Analyzer 1st Line)	Parameter Value (Displayed on Analyzer 2nd Line)	Description	Range	Definition	Data Increment	Default Value
1	Model Number:	1=400 2=450 3=600 4=601 5=800	Displays/adjusts machine model	1 2 3 4 5	400 450 600 601 800	1	1
2	Engine:	1=FORD EFI GAS 2=FORD EFI D/F 3=DEUTZ F4 4=DEUTZ F3	Displays/adjusts engine manufacturer/type	1 2 3	Ford LRG425EFI Gas Ford LRG425EFI Gas with dual fuel Deutz F4M1011F Diesel Deutz F3M1011F Diesel	1	1
3	Glow Plug:	0=NO 1="NUMBER OF MINUTES"	Display/adjusts glow plug presence and on-time	0 1-10	No glow plugs installed. Setting this number tells the controller how many minutes after the EMS is pulled to output to the glow plugs before permitting the engine to be started.	1	0
4	ENG SHUTDOWN:	0=NO 1=SHUTDOWN	Displays/adjusts presence of the engine shutdown feature.	0 1	No engine shutdown Shutdown engine when coolant temperature is greater than 130° C (266° F) or the oil pressure is less than 0.5 bar (8 psi).	1	0
5	JOYSTICK TYPE:	1=RESISTIVE 2=INDUCTIVE	Displays/adjusts joystick type	1 2	Resistive Inductive	1	0
6	Tilt:	1=5Deg 2=4Deg 3=3Deg	Displays/adjusts tilt sensor function	1 2 3	5 degree – reduces the maximum speed of all boom functions to creep when tilted and above elevation. Reduces drive speed to creep when tilted ANSI (US); ANSI (EXPORT); CSA; JAPAN-All Models 4 degree - reduces the maximum speed of all boom functions to creep when tilted and above elevation. Reduces drive speed to creep when tilted. CE; AUSTRALIA - Model 400S Only 3 degree – reduces the maximum speed of all boom functions to creep when titled and above elevation. Reduces drive speed to creep when tilted. CE; AUSTRALIA - Models 450, 600, 601, and 800.	1	1

Go to Discount-Equipment.com to order your parts

Table 6-8. Machine Configuration Parameters

Configuration Digit	Parameter (Displayed on Analyzer 1st Line)	Parameter Value (Displayed on Analyzer 2nd Line)	Description	Range	Definition	Data Increment	Default Value
7	Tower Lift:	0=NO 1=YES	Displays/adjusts tower lift presence	0 1	No Tower Lift installed Yes	1	0
8	Tower Tele:	0=NO 1=YES	Displays/adjusts tower telescope presence	0 1	No Tower Telescope installed Yes	1	0
9	Jib:	0=NO 1=YES 2=SIDESWING	Displays/adjusts jib presence	0 1 2	No Jib installed Jib installed which has up and down movements only Jib installed which has up and down movements and side to side movements	1	0
10	4ws	0=NO 1=YES	Displays/adjusts 4 wheel steer presence	0 1	No 4 wheel steer installed Yes	1	0
11	soft touch	0=NO 1=YES	Displays presence of soft touch system	0 1	No Soft Touch System installed Yes	1	0
12	generator	0=NO 1=YES	Displays presence of generator	0 1	No Generator installed Yes	1	0
13	Head & Tail LIGHTS	0=NO 1=YES	Displays presence of head and tail lights	0 1	No Head and Tail Lights installed Yes	1	0
14	BROKEN Cable switch	0=NO 1=YES	Displays presence of broken cable switch	0 1	No Broken Cable Switch installed Yes	1	0
15	load SENSOR	0=NO 1=WARN ONLY 2=WARN & CUTOUT	Displays presence/function of load sensor	0 1 2	No Load Sensor installed Functions in Creep, Overload Lamp Lit, Platform Alarm Beeps Continuously All functions cutout, flash overload light (500mS on, 500mS off), Platform Alarm beeps (5 sec on, 55 sec off, 5 sec on)	1	0
16	angle SENSOR	0=NO 1=DIGITAL 2=ANALOG	Displays presence/function of angle sensor	0 1 2	No Angle Sensor installed Limit switches are installed An analog sensor is installed	1	0

Go to Discount-Equipment.com to order your parts

Table 6-8. Machine Configuration Parameters

Configuration Digit	Parameter (Displayed on Analyzer 1st Line)	Parameter Value (Displayed on Analyzer 2nd Line)	Description	Range	Definition	Data Increment	Default Value
17	length SENSOR	0=NO 1=DIGITAL 2=ANALOG	Displays presence/function of length sensor	0 1 2	No Length Sensor Installed Limit switch installed An analog sensor is installed	1	0
18	FUNCTION CUTOUT	0=NO 1=BOOM CUTOUT 2=DRIVE CUTOUT 3=DRIVE CUT E & T	Displays presence/function of drive cutout.	0 1 2 3	No Drive Cutout Boom Function Cutout While Driving Above Elevation. (CE) Drive Cutout Above Elevation Drive Cutout Above Elevation And Tilted	1	0
19	ground alarm	0=NO 1=DRIVE 2=LIFT DOWN 3=BOOM & DRIVE	Displays/adjusts ground alarm presence/function	0 1 2 3	No Ground Alarm installed Travel alarm – sounds when the drive function is active. (Option) Descent alarm – sounds when either lift down is active. (Option) Motion alarm – sounds when any function is active. (Option)	1	0
20	PLATFORM ALARM	0=NO 1=FAULT CODE	Displays/adjusts platform alarm presence/functions	0 1	Sounds Continuously When Above Elevation And Tilted Only. Sounds Continuously When Above Elevation And Tilted, And In Conjunction With Fault Code Flashes. (Option)	1	0
21	Tower Prox Switches	0=NO 1=YES	Displays presence/function of Tower Proximity switches for the models specified.	0 1	No Tower Prox Switches Installed Tower Prox Switches Installed	1	0

Go to Discount-Equipment.com to order your parts

6.4 MACHINE PERSONALITY SETTINGS

NOTE: *Personality settings can be adjusted within the adjustment range in order to achieve optimum machine performance.*

Table 6-9. Personality Ranges/Defaults

FUNCTION	PERSONALITY	RANGE	DEFAULTS (Sauer Danfoss)	DEFAULTS (Eaton)
DRIVE	ACCELeration	0.0 to 5.0s	2.0	2.0
	DECELeration	0.0 to 3.0s	2.0	1.5
	FORward MINimum speed	1 to 35%	4	15
	FORward MAXimum speed	1 to 100%	30	50
	REVerse MINimum speed	1 to 35%	4	15
	REVerse MAXimum speed	0 to 100%	30	50
	ELEVATED MAXimum speed	1 to 100%	15	32
	CREEP MAXimum speed	1 to 90%	15	32
STEER	MAXimum speed	1 to 100%	100	100
TOWER LIFT	ACCELeration	0.0to 5.0s	1.5	1.5
	DECELeration	0.0 to 3.0s	0.5	0.5
	MINimum UP speed	1 to 60%	39	39
	MAXimum UP speed	1 to 100%	100	100
	MINimum DOWN speed	1 to 60%	38	38
	MAXimum DOWN speed	1 to 100%	100	100
	MEDIUM speed	0.01 to 1.0	0.60	0.60
MAIN LIFT	ACCELeration	0.0 to 5.0s	2.5	2.5
	DECELeration	0.0 to 3.0s	0.7	0.7
	MINimum UP speed	1 to 60%	30	30
	MAXimum UP speed	1to 100%	67	67
	CREEP Maximum UP speed	1 to 65%	55	55
	MINimum DOWN speed	1 to 60%	45	45
	MAXimum DOWN speed	1 to 100%	76	76
	CREEP maximum DOWN speed	1 to 75%	55	55

Go to Discount-Equipment.com to order your parts

Table 6-9. Personality Ranges/Defaults

FUNCTION	PERSONALITY	RANGE	DEFAULTS (Sauer Danfoss)	DEFAULTS (Eaton)
SWING	ACCELeration	0.1 to 5.0s	2.0	2.0
	DECELeration	0.1 to 3.0s	1.8	1.8
	MINimum LEFT speed	0 to 50%	35	35
	MAXimum LEFT speed	0 to 100%	69	69
	CREEP maximum LEFT speed	0 to 65%	35	35
	MINimum RIGHT speed	0 to 50%	35	35
	MAXimum RIGHT speed	0 to 100%	73	73
	CREEP maximum RIGHT speed	0 to 65%	45	45
TELESCOPE - MAIN	ACCELeration	0.0 to 5.0s	3.5	3.5
	DECELeration	0.0 to 3.0s	0.8	0.8
	MINimum IN speed	1 to 65%	45	45
	MAXimum IN speed	1 to 100%	67	67
	MINimum OUT speed	1 to 65%	50	50
	MAXimum OUT speed	1 to 100%	75	75
	MEDIUM speed	0.01 to 1.0	0.60	0.60
PLATFORM LEVEL	ACCELeration	0.0 to 5.0s	2.5	2.5
	DECELeration	0.0 to 3.0s	0.5	0.5
	MINimum UP speed	1 to 65%	48	48
	MAXimum UP speed	1 to 100%	52	52
	MINimum DOWN speed	1 to 65%	45	45
	MAXimum DOWN speed	1 to 100%	50	50
	MEDIUM speed	0.01 to 1.0	0.60	0.60
PLATFORM ROTATE	ACCELeration	0.0 to 5.0s	1.8	1.8
	DECELeration	0.0 to 3.0s	0.3	0.3
	MINimum LEFT speed	1 to 100%	34	34
	MAXimum LEFT speed	1 to 100%	50	50
	MINimum RIGHT speed	1 to 100%	34	34
	MAXimum RIGHT speed	1 to 100%	50	50
	MEDIUM speed	0.01 to 1.0	0.60	0.60

Go to Discount-Equipment.com to order your parts

Table 6-9. Personality Ranges/Defaults

FUNCTION	PERSONALITY	RANGE	DEFAULTS (Sauer Danfoss)	DEFAULTS (Eaton)
JIB LIFT	Lift ACCELeration	0.0 to 5.0s	5.0	5.0
	Lift DECELeration	0.0 to 3.0s	1.0	1.0
	MINimum UP speed	1 to 65%	46	46
	MAXimum UP speed	1 to 100%	52	52
	MINimum DOWN speed	1 to 65%	45	45
	MAXimum DOWN speed	1 to 100%	52	52
	MEDIUM speed	0.01 to 1.0	0.60	0.60
GROUND MODE	Tower LIFT UP speed	0 to 100%	99	99
	Tower LIFT DOWN speed	0 to 100%	99	99
	Main LIFT UP speed	0 to 100%	60	60
	Main LIFT DOWN speed	0 to 100%	60	60
	SWING speed	0 to 100%	60	60
	Main TELEscope speed	0 to 100%	66	66
	Tower TELEscope speed	0 to 100%	N/A	N/A
	Platform ROTATE speed	0 to 100%	49	49
	Platform LEVEL speed	0 to 100%	49	49
	JIB LIFT speed	0 to 100%	50	50
	JIB Swing	0 to 100%	N/A	N/A

4150365-I

Go to Discount-Equipment.com to order your parts

Table 6-10. Help Fault Codes, Displayed Faults, and Descriptions - Prior to SN 0300066931

Fault Flash Code	Communicated (Displayed on Analyzer) Fault	Description	Priority
None	No flash code is indicated for the following help messages. They are intended to hint at a possible problem if the vehicle is not behaving as expected.		1
	EVERYTHING OK	The "normal" help message in platform mode	
	GROUND MODE OK	The "normal" help message in ground mode	
	DRIVING AT CREEP - TILTED	Drive speed is limited to creep because the vehicle is tilted.	
	FSW OPEN	A drive or boom function has been selected but footswitch is open.	
	RUNNING AT CREEP - CREEP SWITCH OPEN	All function speeds are limited to creep because the creep switch is open.	
	RUNNING AT CREEP - TILTED AND ABOVE ELEVATION	All function speeds are limited to creep because the vehicle is tilted and above elevation.	
	RUNNING AT CUTBACK - ABOVE ELEVATION	Drive speed is limited to "ELEVATED MAX" because the vehicle is above elevation.	
	TESTS ACTIVE- RECYCLE EMS TO END	The system tests have been activated; normal vehicle operation is not allowed.	
1/1	Flash code 1/1 indicates a "sleep" mode. NOT REQUIRED		
2/1	Flash code 2/1 indicates problems with footswitch.		2
	FSW FAULTY	The two foot switch signals do not agree. EMS recycle required.	
	KEYSWITCH FAULTY	Both platform and ground modes are selected simultaneously	
2/2	Flash code 2/2 indicates problems with drive & steer selection.		3
	DRIVE JOYSTICK FAULTY	The drive joystick center tap is out of valid range, or the wiper is wire-off.	
	DRIVE LOCKED - JOYSTICK MOVED BEFORE EMS/FSW	Drive was selected before and during footswitch closure.	
	FSW INTERLOCK TRIPPED	Footswitch was closed for seven seconds with no function selected.	
	STEER LOCKED - SELECTED BEFORE EMS/FSW	Steer was selected before and during footswitch closure.	
	STEER SWITCHES FAULTY	Both steer switches are active together.	
	WAITING FOR FSW TO BE OPEN	Footswitch was closed when platform mode was selected.	
	JOYSTICK FAULTS - CHECK PLATFORM BOX WIRING	More than one of the drive, lift, and swing joystick center tap or wiper voltages is out of range. This is probably due to a short-circuit across a joystick pot.	
2/3	Flash code 2/3 indicates problems with boom function selection.		3
	LIFT/SWING JOYSTICK FAULTY	The lift or swing joystick center tap is out of valid range, or the wiper is wire-off.	
	LIFT/SWING LOCKED - JOYSTICK MOVED BEFORE EMS/FSW	Platform upper lift or swing was selected before and during footswitch closure.	
	PUMP POT FAULTY	The pump pot is open-circuit; all platform boom functions except upper lift & swing will run at creep.	
	PUMP SWITCHES FAULTY - CHECK DIAGNOSTICS/BOOM	A boom function (lower lift, telescope, basket level, basket rotate, jib) has both directions selected together.	
	PUMP SWITCHES LOCKED - SELECTED BEFORE EMS/FSW	A platform boom function (lower lift, telescope, basket level, basket rotate, jib) was selected before key switch or footswitch closure.	
	PUMP SWITCHED LOCKED - SELECTED BEFORE EMS	A ground boom function (lower lift, telescope, basket level, basket rotate, jib) was selected before key switch.	
	SWING/LIFT JOYSTICK FAULTY	The swing joystick center tap is out of valid range, or the wiper is wire-off.	
2/4	Flash code 2/4 indicates that steering digital inputs are faulty. NOT REQUIRED		

Coast Discount Equipment.com to order your parts

Table 6-10. Help Fault Codes, Displayed Faults, and Descriptions - Prior to SN 0300066931

Fault Flash Code	Communicated (Displayed on Analyzer) Fault	Description	Priority
2/5	Flash code 2/5 indicates that a function is prevented due to a cutout.		4
	BOOM PREVENTED - DRIVE SELECTED	A boom function is selected while a drive function is selected and drive cutout is configured to prevent simultaneous drive & boom operation.	
	DRIVE PREVENTED - ABOVE ELEVATION	Drive is selected while above elevation and drive cutout is configured to prevent drive.	
	DRIVE PREVENTED - BOOM MOVEMENT SELECTED	Drive is selected while a boom function is selected and drive cutout is configured to prevent simultaneous drive & boom operation.	
	DRIVE PREVENTED - TILTED & ABOVE ELEVATION	Drive is selected while tilted and above elevation and tilt is configured to cutout drive.	
	BOOM PREVENTED – FUNCTION CUT-OUT ACTIVE	A boom function is selected while function cutout is active and configured to cutout boom functions.	
	BOOM & DRIVE PREVENTED-FUNCTION CUTOUT ACTIVE	Drive or a boom function is selected while function cutout is active and configured to cutout all functions.	
2/7	Flash code 2/7 indicates that the accelerator input is faulty. NOT REQUIRED		
2/8	Flash code 2/8 indicates that the hydraulic filter is being bypassed.		5
	RETURN FILTER BYPASSED	Hydraulic return filter clogged	
	CHARGE PUMP FILTER BYPASSED	Charge pump filter clogged	
3/1	Flash code 3/1 indicates that a contactor did not close when energized. NOT REQUIRED		
3/2	Flash code 3/2 indicates that a contactor did not open when energized. NOT REQUIRED		
3/3	Flash code 3/3 indicates that a driver is short-circuit.		6
	ADD DRIVER FAULTS		
3/5	Flash code 3/5 indicates a brake pressure problem. NOT REQUIRED		7
4/2	Flash code 4/2 indicates that the engine is over temperature. NOT REQUIRED		8
4/3	Flash code 4/3 indicates problems with the engine		9
	ENGINE TEMP GREATER THAN 130°C (266° F)		
	AIR FILTER BYPASSED	Air filter clogged	
	NO aLTERNATOR OUTPUT	The measured battery voltage is less than 12.5 VDC	
	OIL PRESSURE LESS THAN 0.5 BAR (8PSI)		
4/4	Flash code 4/4 indicates problems with the battery supply.		7
	BATTERY LOW	Battery voltage is below 11V. This is a warning - the controller does not shut down.	
	BATTERY TOO HIGH - SYSTEM SHUT DOWN	Battery voltage is above 18V. EMS recycle required.	
	BATTERY TOO LOW - SYSTEM SHUT DOWN	Battery voltage is below 6V. EMS recycle required.	

Go to visionequipment.com to order your parts

Table 6-10. Help Fault Codes, Displayed Faults, and Descriptions - Prior to SN 0300066931

Fault Flash Code	Communicated (Displayed on Analyzer) Fault	Description	Priority
5/5	Flash code 5/5 indicates problems with vehicle engine RPM or the encoder.		8
	SPEED SENSOR READING INVALID SPEED	Speed sensor is indicating an impossible number of pulses. This is probably due to a faulty speed sensor.	
	SPEED INPUT LOST	This indicates that the control system has determined that the diesel engine speed input to the system has been lost. This is probably due to wiring problems at the ground module or a faulty speed sensor.	
	ENGINE SPEED DOES NOT MATCH COMMAND	This indicates that the control system has determine that the diesel engine governor has stuck. This is probably due to electrical or mechanical problems with the governor.	
6/6	Flash code 6/6 indicates problems with the CAN bus.		10
	CAN BUS FAILURE:	The ground module or platform module is not receiving. This is probably due to wiring problems between the platform and ground modules.	
7/7	Flash code 7/7 indicates problems with a motor. NOT REQUIRED		
9/9	Flash code 9/9 indicates problems with the controller.		11
	PLATFORM MODULE FAILURE: hwfs CODE 1	Platform module V(Low) FET has failed	
	GROUND MODULE FAILURE: hwfs CODE 1	Ground module V(Low) FET has failed	

Go to Discount-Equipment.com to order your parts

Table 6-11. Diagnostic Trouble Code

Analyzer Text	DTC	Flash Code	Sequence	Operational Fault	Clear Sky Default Information
HELP COMMENT	000	00	0		
EVERYTHING OK	001	00	1	Y	N
GROUND MODE OK	002	00	2	Y	N
RUNNING AT CUTBACK - OUT OF TRANSPORT POSITION	0010	00	10	Y	N
FSW OPEN	0011	00	11	Y	N
RUNNING AT CREEP - CREEP SWITCH OPEN	0012	00	12	Y	N
RUNNING AT CREEP - TILTED AND ABOVE ELEVATION	0013	00	13	Y	N
CHASSIS TILT SENSOR OUT OF RANGE	0014	00	14	Y	N
LOAD SENSOR READING UNDER WEIGHT	0015	00	15	Y	N
APU ACTIVE	0035	00	35	Y	N
RUNNING AT CREEP-CREEP SWITCH CLOSED	0040	00	40	Y	N
POWER-UP	210	21	0	Y	N
POWER CYCLE	211	21	1	Y	N
KEYSWITCH FAULTY	212	21	2	N	N
FSW FAULTY	213	21	3	N	N
PLATFORM INPUTS	220	22	0		N
STEER SWITCHES FAULTY	227	22	7	N	N
FSW INTERLOCK TRIPPED	2211	22	11	Y	N
DRIVE LOCKED - JOYSTICK MOVED BEFORE FOOTSWITCH	2212	22	12	Y	N
STEER LOCKED - SELECTED BEFORE FOOTSWITCH	2213	22	13	Y	N
DRIVE/STEER LOCKED - JOYSTICK MOVED BEFORE ENABLE	2214	22	14	Y	N
D/S JOY. OUT OF RANGE LOW	2215	22	15	N	N
D/S JOY. OUT OF RANGE HIGH	2216	22	16	N	N
D/S JOY. CENTER TAP BAD	2217	22	17	N	N
L/S JOY. OUT OF RANGE LOW	2218	22	18	N	N
L/S JOY. OUT OF RANGE HIGH	2219	22	19	N	N
L/S JOY. CENTER TAP BAD	2220	22	20	N	N
LIFT/SWING LOCKED - JOYSTICK MOVED BEFORE FOOTSWITCH	2221	22	21	Y	N
WAITING FOR FSW TO BE OPEN	2222	22	22	Y	N
FUNCTION SWITCHES LOCKED - SELECTED BEFORE ENABLE	2223	22	23	Y	N
FOOTSWITCH SELECTED BEFORE START	2224	22	24	Y	N
FUNCTION PROBLEM-HIGH SPEED AND CREEP ACTIVE TOGETHER	2269	22	69	N	N
GROUND INPUTS	230	23	0		
FUNCTION SWITCHES FAULTY - CHECK DIAGNOSTICS/BOOM	234	23	4	Y	N
FUNCTION SWITCHES LOCKED - SELECTED BEFORE AUX POWER	235	23	5	Y	N
FUNCTION SWITCHES LOCKED - SELECTED BEFORE START SWITCH	236	23	6	Y	N
START SWITCH LOCKED - SELECTED BEFORE KEYSWITCH	237	23	7	Y	N
FUNCTION PREVENTED	250	25	0		
MODEL CHANGED - HYDRAULICS SUSPENDED - CYCLE EMS	259	25	9	Y	N
GENERATOR MOTION CUTOUT ACTIVE	2513	25	13	Y	N
BOOM PREVENTED - DRIVE SELECTED	2514	25	14	Y	N
DRIVE PREVENTED - ABOVE ELEVATION	2516	25	16	Y	N

Go to Discount-Equipment.com to order your parts

Table 6-11. Diagnostic Trouble Code

Analyzer Text	DTC	Flash Code	Sequence	Operational Fault	Clear Sky Default Information
DRIVE PREVENTED - TILTED & ABOVE ELEVATION	2517	25	17	Y	N
DRIVE PREVENTED - BOOM SELECTED	2518	25	18	Y	N
DRIVE PREVENTED - TILTED & EXTENDED OR HIGH ANGLE	2519	25	19	Y	N
FUNCTIONS LOCKED OUT - CONSTANT DATA VERSION IMPROPER	2520	25	20	N	N
UMS SENSOR FORWARD LIMIT REACHED	2530	25	30	N	N
UMS SENSOR OUT OF USABLE RANGE	2531	25	31	N	N
UMS SENSOR BACKWARD LIMIT REACHED	2532	25	32	N	N
GROUND OUTPUT DRIVER	330	33	0		
BRAKE - SHORT TO BATTERY	331	33	1	N	N
BRAKE - OPEN CIRCUIT	332	33	2	N	N
GROUND ALARM - SHORT TO BATTERY	3311	33	11	N	N
RIGHT FORWARD DRIVE PUMP - SHORT TO GROUND	3316	33	16	N	N
RIGHT FORWARD DRIVE PUMP - SHORT TO BATTERY OR OPEN CIRCUIT	3319	33	19	N	N
RIGHT REVERSE DRIVE PUMP - SHORT TO GROUND	3320	33	20	N	N
RIGHT REVERSE DRIVE PUMP - SHORT TO BATTERY OR OPEN CIRCUIT	3323	33	23	N	N
LEFT FORWARD DRIVE PUMP - SHORT TO GROUND	3324	33	24	N	N
LEFT FORWARD DRIVE PUMP - SHORT TO BATTERY OR OPEN CIRCUIT	3327	33	27	N	N
LEFT REVERSE DRIVE PUMP - SHORT TO GROUND	3328	33	28	N	N
LEFT REVERSE DRIVE PUMP - SHORT TO BATTERY OR OPEN CIRCUIT	3331	33	31	N	N
FORWARD DRIVE PUMP - SHORT TO GROUND	3332	33	32	N	N
FORWARD DRIVE PUMP - SHORT TO BATTERY OR OPEN CIRCUIT	3333	33	33	N	N
REVERSE DRIVE PUMP - SHORT TO GROUND	3334	33	34	N	N
REVERSE DRIVE PUMP - SHORT TO BATTERY OR OPEN CIRCUIT	3335	33	35	N	N
ALTERNATOR POWER - SHORT TO GROUND	3336	33	36	N	N
AUX POWER - SHORT TO GROUND	3340	33	40	N	N
AUX POWER - OPEN CIRCUIT	3341	33	41	N	N
AUX POWER - SHORT TO BATTERY	3342	33	42	N	N
ELECTRIC FAN - SHORT TO GROUND	3346	33	46	N	N
ELECTRIC FAN - OPEN CIRCUIT	3347	33	47	N	N
ELECTRIC FAN - SHORT TO BATTERY	3348	33	48	N	N
ELECTRIC PUMP - SHORT TO GROUND	3349	33	49	N	N
ELECTRIC PUMP - OPEN CIRCUIT	3350	33	50	N	N
ELECTRIC PUMP - SHORT TO BATTERY	3351	33	51	N	N
LP LOCK - SHORT TO GROUND	3352	33	52	N	N
LP LOCK - OPEN CIRCUIT	3353	33	53	N	N
LP LOCK - SHORT TO BATTERY	3354	33	54	N	N
LP START ASSIST - SHORT TO GROUND	3355	33	55	N	N
LP START ASSIST - OPEN CIRCUIT	3356	33	56	N	N
LP START ASSIST - SHORT TO BATTERY	3357	33	57	N	N
MAIN DUMP VALVE - SHORT TO GROUND	3358	33	58	N	N
MAIN DUMP VALVE - OPEN CIRCUIT	3359	33	59	N	N
MAIN DUMP VALVE - SHORT TO BATTERY	3360	33	60	N	N

Go to Discount-Equipment.com to order your parts

Table 6-11. Diagnostic Trouble Code

Analyzer Text	DTC	Flash Code	Sequence	Operational Fault	Clear Sky Default Information
BRAKE - SHORT TO GROUND	3361	33	61	N	N
START SOLENOID - SHORT TO GROUND	3362	33	62	N	N
START SOLENOID - OPEN CIRCUIT	3363	33	63	N	N
START SOLENOID - SHORT TO BATTERY	3364	33	64	N	N
STEER DUMP VALVE - SHORT TO GROUND	3365	33	65	N	N
STEER DUMP VALVE - OPEN CIRCUIT	3366	33	66	N	N
STEER DUMP VALVE - SHORT TO BATTERY	3367	33	67	N	N
TWO SPEED VALVE - SHORT TO GROUND	3368	33	68	N	N
TWO SPEED VALVE - OPEN CIRCUIT	3369	33	69	N	N
TWO SPEED VALVE - SHORT TO BATTERY	3370	33	70	N	N
GROUND ALARM - SHORT TO GROUND	3371	33	71	N	N
GROUND ALARM - OPEN CIRCUIT	3372	33	72	N	N
GEN SET/WELDER - SHORT TO GROUND	3373	33	73	N	N
GEN SET/WELDER - OPEN CIRCUIT	3374	33	74	N	N
GEN SET/WELDER - SHORT TO BATTERY	3375	33	75	N	N
HEAD TAIL LIGHT - SHORT TO GROUND	3376	33	76	N	N
HEAD TAIL LIGHT - OPEN CIRCUIT	3377	33	77	N	N
HEAD TAIL LIGHT - SHORT TO BATTERY	3378	33	78	N	N
HOUR METER - SHORT TO GROUND	3379	33	79	N	N
PLATFORM LEVEL UP VALVE - SHORT TO GROUND	3382	33	82	N	N
PLATFORM LEVEL UP VALVE - OPEN CIRCUIT	3383	33	83	N	N
PLATFORM LEVEL UP VALVE - SHORT TO BATTERY	3384	33	84	N	N
PLATFORM LEVEL UP OVERRIDE VALVE - SHORT TO GROUND	3385	33	85	N	N
PLATFORM LEVEL UP OVERRIDE VALVE - OPEN CIRCUIT	3386	33	86	N	N
PLATFORM LEVEL UP OVERRIDE VALVE - SHORT TO BATTERY	3387	33	87	N	N
PLATFORM LEVEL DOWN VALVE - SHORT TO GROUND	3388	33	88	N	N
PLATFORM LEVEL DOWN VALVE - OPEN CIRCUIT	3389	33	89	N	N
PLATFORM LEVEL DOWN VALVE - SHORT TO BATTERY	3390	33	90	N	N
PLATFORM LEVEL DOWN OVERRIDE VALVE - SHORT TO GROUND	3391	33	91	N	N
PLATFORM LEVEL DOWN OVERRIDE VALVE - OPEN CIRCUIT	3392	33	92	N	N
PLATFORM LEVEL DOWN OVERRIDE VALVE - SHORT TO BATTERY	3393	33	93	N	N
PLATFORM ROTATE LEFT VALVE - SHORT TO GROUND	3394	33	94	N	N
PLATFORM ROTATE LEFT VALVE - OPEN CIRCUIT	3395	33	95	N	N
PLATFORM ROTATE LEFT VALVE - SHORT TO BATTERY	3396	33	96	N	N
PLATFORM ROTATE RIGHT VALVE - SHORT TO GROUND	3397	33	97	N	N
PLATFORM ROTATE RIGHT VALVE - OPEN CIRCUIT	3398	33	98	N	N
PLATFORM ROTATE RIGHT VALVE - SHORT TO BATTERY	3399	33	99	N	N
JIB LIFT UP VALVE - SHORT TO GROUND	33100	33	100	N	N
JIB LIFT UP VALVE - OPEN CIRCUIT	33101	33	101	N	N
JIB LIFT UP VALVE - SHORT TO BATTERY	33102	33	102	N	N
JIB LIFT DOWN VALVE - SHORT TO GROUND	33103	33	103	N	N
JIB LIFT DOWN VALVE - OPEN CIRCUIT	33104	33	104	N	N

Get an Discount Equipment.com to order your parts

Table 6-11. Diagnostic Trouble Code

Analyzer Text	DTC	Flash Code	Sequence	Operational Fault	Clear Sky Default Information
JIB LIFT DOWN VALVE - SHORT TO BATTERY	33105	33	105	N	N
TOWER LIFT UP VALVE - SHORT TO GROUND	33106	33	106	N	N
TOWER LIFT UP VALVE - OPEN CIRCUIT	33107	33	107	N	N
TOWER LIFT UP VALVE - SHORT TO BATTERY	33108	33	108	N	N
TOWER LIFT DOWN VALVE - SHORT TO GROUND	33109	33	109	N	N
TOWER LIFT DOWN VALVE - OPEN CIRCUIT	33110	33	110	N	N
TOWER LIFT DOWN VALVE - SHORT TO BATTERY	33111	33	111	N	N
TOWER TELESCOPE IN VALVE - SHORT TO GROUND	33112	33	112	N	N
TOWER TELESCOPE IN VALVE - OPEN CIRCUIT	33113	33	113	N	N
TOWER TELESCOPE IN VALVE - SHORT TO BATTERY	33114	33	114	N	N
TOWER TELESCOPE OUT VALVE - SHORT TO GROUND	33115	33	115	N	N
TOWER TELESCOPE OUT VALVE - OPEN CIRCUIT	33116	33	116	N	N
TOWER TELESCOPE OUT VALVE - SHORT TO BATTERY	33117	33	117	N	N
SWING RIGHT VALVE - SHORT TO GROUND	33118	33	118	N	N
SWING RIGHT VALVE - OPEN CIRCUIT	33119	33	119	N	N
TELESCOPE IN VALVE - SHORT TO BATTERY	33120	33	120	N	N
SWING RIGHT VALVE - SHORT TO BATTERY	33121	33	121	N	N
SWING LEFT VALVE - SHORT TO GROUND	33122	33	122	N	N
TELESCOPE OUT VALVE - SHORT TO BATTERY	33123	33	123	N	N
LIFT UP DUMP VALVE - SHORT TO GROUND	33124	33	124	N	N
LIFT UP DUMP VALVE - OPEN CIRCUIT	33125	33	125	N	N
LIFT UP DUMP VALVE - SHORT TO BATTERY	33126	33	126	N	N
LIFT DOWN HOLDING VALVE - SHORT TO GROUND	33127	33	127	N	N
LIFT DOWN HOLDING VALVE - OPEN CIRCUIT	33128	33	128	N	N
LIFT DOWN HOLDING VALVE - SHORT TO BATTERY	33129	33	129	N	N
THROTTLE ACTUATOR - SHORT TO GROUND	33130	33	130	N	N
THROTTLE ACTUATOR - OPEN CIRCUIT	33131	33	131	N	N
THROTTLE ACTUATOR - SHORT TO BATTERY	33132	33	132	N	N
PLATFORM CONTROL VALVE - SHORT TO GROUND	33133	33	133	N	N
PLATFORM CONTROL VALVE - OPEN CIRCUIT	33134	33	134	N	N
PLATFORM CONTROL VALVE - SHORT TO BATTERY	33135	33	135	N	N
LIFT DOWN VALVE - OPEN CIRCUIT	33170	33	170	N	N
LIFT DOWN VALVE - SHORT TO BATTERY	33171	33	171	N	N
LIFT DOWN VALVE - SHORT TO GROUND	33172	33	172	N	N
JIB ROTATE LEFT VALVE - OPEN CIRCUIT	33175	33	175	N	N
JIB ROTATE LEFT VALVE - SHORT TO BATTERY	33176	33	176	N	N
JIB ROTATE LEFT VALVE - SHORT TO GROUND	33177	33	177	N	N
JIB ROTATE RIGHT VALVE - OPEN CIRCUIT	33178	33	178	N	N
JIB ROTATE RIGHT VALVE - SHORT TO BATTERY	33179	33	179	N	N
JIB ROTATE RIGHT VALVE - SHORT TO GROUND	33180	33	180	N	N
TELESCOPE OUT VALVE - OPEN CIRCUIT	33186	33	186	N	N
TELESCOPE OUT VALVE - SHORT TO GROUND	33188	33	188	N	N

Go to Discount-Equipment.com to order your parts

Table 6-11. Diagnostic Trouble Code

Analyzer Text	DTC	Flash Code	Sequence	Operational Fault	Clear Sky Default Information
TELESCOPE IN VALVE - OPEN CIRCUIT	33189	33	189	N	N
TELESCOPE IN VALVE - SHORT TO GROUND	33190	33	190	N	N
HORN - OPEN CIRCUIT	33207	33	207	N	N
HORN - SHORT TO BATTERY	33208	33	208	N	N
HORN - SHORT TO GROUND	33209	33	209	N	N
GLOWPLUG - OPEN CIRCUIT	33279	33	279	N	N
GLOWPLUG - SHORT TO BATTERY	33280	33	280	N	N
GLOWPLUG - SHORT TO GROUND	33281	33	281	N	N
SWING LEFT VALVE - OPEN CIRCUIT	33295	33	295	N	N
SWING LEFT VALVE - SHORT TO BATTERY	33306	33	306	N	N
FLOW CONTROL VALVE - OPEN CIRCUIT	33314	33	314	N	N
FLOW CONTROL VALVE - SHORT TO BATTERY	33315	33	315	N	N
FLOW CONTROL VALVE - SHORT TO GROUND	33316	33	316	N	N
DRIVE FORWARD VALVE - OPEN CIRCUIT	33317	33	317	N	N
DRIVE FORWARD VALVE - SHORT TO BATTERY	33318	33	318	N	N
DRIVE FORWARD VALVE - SHORT TO GROUND	33319	33	319	N	N
DRIVE REVERSE VALVE - OPEN CIRCUIT	33320	33	320	N	N
DRIVE REVERSE VALVE - SHORT TO BATTERY	33321	33	321	N	N
DRIVE REVERSE VALVE - SHORT TO GROUND	33322	33	322	N	N
LIFT UP VALVE - OPEN CIRCUIT	33323	33	323	N	N
LIFT UP VALVE - SHORT TO BATTERY	33324	33	324	N	N
LIFT UP VALVE - SHORT TO GROUND	33325	33	325	N	N
DRIVE - CURRENT FEEDBACK READING TOO LOW	33331	33	331	N	N
LEFT TRACK - CURRENT FEEDBACK READING TOO LOW	33332	33	332	N	N
RIGHT TRACK - CURRENT FEEDBACK READING TOO LOW	33333	33	333	N	N
LEFT TRACK - CURRENT FEEDBACK READING LOST	33408	33	408	N	N
RIGHT TRACK - CURRENT FEEDBACK READING LOST	33409	33	409	N	N
DRIVE - CURRENT FEEDBACK READING LOST	33410	33	410	N	N
PLATFORM OUTPUT DRIVER	340	34	0		
PLATFORM LEVEL UP VALVE - OPEN CIRCUIT	341	34	1	N	N
PLATFORM LEVEL UP VALVE - SHORT TO BATTERY	342	34	2	N	N
PLATFORM LEVEL UP VALVE - SHORT TO GROUND	343	34	3	N	N
PLATFORM LEVEL UP VALVE - SHORT TO BATTERY OR OPEN CIRCUIT	344	34	4	N	N
PLATFORM LEVEL DOWN VALVE - OPEN CIRCUIT	345	34	5	N	N
PLATFORM LEVEL DOWN VALVE - SHORT TO BATTERY	346	34	6	N	N
PLATFORM LEVEL DOWN VALVE - SHORT TO GROUND	347	34	7	N	N
PLATFORM LEVEL DOWN VALVE - SHORT TO BATTERY OR OPEN CIRCUIT	348	34	8	N	N
PLATFORM ROTATE LEFT VALVE - OPEN CIRCUIT	349	34	9	N	N
PLATFORM ROTATE LEFT VALVE - SHORT TO BATTERY	3410	34	10	N	N
PLATFORM ROTATE LEFT VALVE - SHORT TO GROUND	3411	34	11	N	N
PLATFORM ROTATE RIGHT VALVE - OPEN CIRCUIT	3412	34	12	N	N
PLATFORM ROTATE RIGHT VALVE - SHORT TO BATTERY	3413	34	13	N	N

Go to Discount-Equipment.com to order your parts

Table 6-11. Diagnostic Trouble Code

Analyzer Text	DTC	Flash Code	Sequence	Operational Fault	Clear Sky Default Information
PLATFORM ROTATE RIGHT VALVE - SHORT TO GROUND	3414	34	14	N	N
JIB LIFT UP VALVE - OPEN CIRCUIT	3415	34	15	N	N
JIB LIFT UP VALVE - SHORT TO BATTERY	3416	34	16	N	N
JIB LIFT UP VALVE - SHORT TO GROUND	3417	34	17	N	N
JIB LIFT DOWN VALVE - OPEN CIRCUIT	3418	34	18	N	N
JIB LIFT DOWN VALVE - SHORT TO BATTERY	3419	34	19	N	N
JIB LIFT DOWN VALVE - SHORT TO GROUND	3420	34	20	N	N
JIB ROTATE LEFT VALVE - OPEN CIRCUIT	3421	34	21	N	N
JIB ROTATE LEFT VALVE - SHORT TO BATTERY	3422	34	22	N	N
JIB ROTATE LEFT VALVE - SHORT TO GROUND	3423	34	23	N	N
JIB ROTATE RIGHT VALVE - OPEN CIRCUIT	3424	34	24	N	N
JIB ROTATE RIGHT VALVE - SHORT TO BATTERY	3425	34	25	N	N
JIB ROTATE RIGHT VALVE - SHORT TO GROUND	3426	34	26	N	N
ENGINE	430	43	0		
FUEL SENSOR - SHORT TO BATTERY	431	43	1	N	Y
FUEL SENSOR - SHORT TO GROUND	432	43	2	N	Y
OIL PRESSURE - SHORT TO BATTERY	433	43	3	N	Y
OIL PRESSURE - SHORT TO GROUND	434	43	4	N	Y
COOLANT TEMPERATURE - SHORT TO GROUND	435	43	5	N	Y
FORD FAULT CODE ##	436	43	6	N	Y
ENGINE TROUBLE CODE	437	43	7	N	N
HIGH ENGINE TEMP	438	43	8	N	Y
AIR FILTER BYPASSED	439	43	9	N	Y
NO ALTERNATOR OUTPUT	4310	43	10	N	Y
LOW OIL PRESSURE	4311	43	11	N	Y
485 COMMUNICATIONS LOST	4312	43	12	N	Y
THROTTLE ACTUATOR FAILURE	4313	43	13	N	Y
WRONG ENGINE SELECTED - ECM DETECTED	4314	43	14	N	Y
LOSS OF ENGINE SPEED SENSOR	4322	43	22	N	Y
SPEED SENSOR READING INVALID SPEED	4323	43	23	N	Y
BATTERY / GENSET	440	44	0		
BATTERY VOLTAGE TOO LOW - SYSTEM SHUTDOWN	441	44	1	N	Y
BATTERY VOLTAGE TOO HIGH - SYSTEM SHUTDOWN	442	44	2	N	Y
BATTERY VOLTAGE LOW	445	44	5	N	Y
COMMUNICATION	660	66	0		
CANBUS FAILURE - PLATFORM MODULE	662	66	2	N	N
CANBUS FAILURE - ACCESSORY MODULE	664	66	4	N	N
CANBUS FAILURE - PROPULSION MODULE	665	66	5	N	N
CANBUS FAILURE - ENGINE CONTROLLER	666	66	6	N	N
CANBUS FAILURE - UMS SENSOR	6620	66	20	N	N
ACCESSORY	670	67	0		
ACCESSORY FAULT	671	67	1	N	N

Go to Discount-Equipment.com to order your parts

Table 6-11. Diagnostic Trouble Code

Analyzer Text	DTC	Flash Code	Sequence	Operational Fault	Clear Sky Default Information
TILT SENSOR	810	81	0		
CHASSIS TILT SENSOR NOT CALIBRATED	813	81	3	N	N
CHASSIS TILT SENSOR DISAGREEMENT	815	81	5	N	N
UMS SENSOR NOT CALIBRATED	816	81	6	N	N
UMS SENSOR FAULT	817	81	7	N	N
PLATFORM LOAD SENSE	820	82	0		
LSS HAS NOT BEEN CALIBRATED	825	82	5	N	N
RUNNING AT CREEP - PLATFORM OVERLOADED	826	82	6	N	N
DRIVE & BOOM PREVENTED - PLATFORM OVERLOADED	827	82	7	N	N
LIFT UP & TELE OUT PREVENTED - PLATFORM OVERLOADED	828	82	8	N	N
PLATFORM / JIB	830	83	0		
PLATFORM LEVELING OVERRIDE ON	831	83	1	N	N
PLATFORM LEVELING OVERRIDE OFF	832	83	2	N	N
PLATFORM LEVEL UP CRACKPOINT - NOT CALIBRATED	833	83	3	N	N
PLATFORM LEVEL DOWN CRACKPOINT - NOT CALIBRATED	834	83	4	N	N
PLATFORM LEVEL SENSOR #1 - NOT ZERO CALIBRATED	835	83	5	N	N
PLATFORM LEVEL SENSOR #1 - ZERO OUT OF RANGE	836	83	6	N	N
PLATFORM LEVEL SENSOR #1 - SHORT TO BATTERY	837	83	7	N	N
PLATFORM LEVEL SENSOR #1 - SHORT TO GROUND OR OPEN CIRCUIT	838	83	8	N	N
PLATFORM LEVEL SENSOR #2 - NOT ZERO CALIBRATED	839	83	9	N	N
PLATFORM LEVEL SENSOR #2 - ZERO OUT OF RANGE	8310	83	10	N	N
PLATFORM LEVEL SENSOR #2 - SHORT TO BATTERY	8311	83	11	N	N
PLATFORM LEVEL SENSOR #2 - SHORT TO GROUND OR OPEN CIRCUIT	8312	83	12	N	N
PLATFORM LEVEL SENSOR #1 - REFERENCE VOLTAGE OUT OF RANGE	8313	83	13	N	N
PLATFORM LEVEL SENSOR #2 - REFERENCE VOLTAGE OUT OF RANGE	8314	83	14	N	N
PLATFORM LEVELING SENSOR - DISAGREEMENT	8315	83	15	N	N
PLATFORM LEVEL SENSOR #1 - COMMUNICATIONS LOST	8316	83	16	N	N
PLATFORM LEVEL SENSOR #2 - COMMUNICATIONS LOST	8317	83	17	N	N
PLATFORM LEVELING SYSTEM TIMEOUT	8318	83	18	N	N
STEERING / AXLE	860	86	0		
FRONT LEFT STEER VALVE - OPEN CIRCUIT	8639	86	39	N	N
FRONT LEFT STEER VALVE - SHORT TO BATTERY	8640	86	40	N	N
FRONT LEFT STEER VALVE - SHORT TO GROUND	8641	86	41	N	N
FRONT RIGHT STEER VALVE - OPEN CIRCUIT	8642	86	42	N	N
FRONT RIGHT STEER VALVE - SHORT TO BATTERY	8643	86	43	N	N
FRONT RIGHT STEER VALVE - SHORT TO GROUND	8644	86	44	N	N
REAR LEFT STEER VALVE - OPEN CIRCUIT	8645	86	45	N	N
REAR LEFT STEER VALVE - SHORT TO BATTERY	8646	86	46	N	N
REAR LEFT STEER VALVE - SHORT TO GROUND	8647	86	47	N	N
REAR RIGHT STEER VALVE - OPEN CIRCUIT	8648	86	48	N	N
REAR RIGHT STEER VALVE - SHORT TO BATTERY	8649	86	49	N	N
REAR RIGHT STEER VALVE - SHORT TO GROUND	8650	86	50	N	N

Go to Distributorequipment.com to order your parts

Table 6-11. Diagnostic Trouble Code

Analyzer Text	DTC	Flash Code	Sequence	Operational Fault	Clear Sky Default Information
RIGHT TRACK FORWARD VALVE - OPEN CIRCUIT	8652	86	52	N	N
RIGHT TRACK FORWARD VALVE - SHORT TO BATTERY	8653	86	53	N	N
RIGHT TRACK FORWARD VALVE - SHORT TO GROUND	8654	86	54	N	N
RIGHT TRACK REVERSE VALVE - OPEN CIRCUIT	8655	86	55	N	N
RIGHT TRACK REVERSE VALVE - SHORT TO BATTERY	8656	86	56	N	N
RIGHT TRACK REVERSE VALVE - SHORT TO GROUND	8657	86	57	N	N
LEFT TRACK FORWARD VALVE - OPEN CIRCUIT	8658	86	58	N	N
LEFT TRACK FORWARD VALVE - SHORT TO BATTERY	8659	86	59	N	N
LEFT TRACK FORWARD VALVE - SHORT TO GROUND	8660	86	60	N	N
LEFT TRACK REVERSE VALVE - OPEN CIRCUIT	8661	86	61	N	N
LEFT TRACK REVERSE VALVE - SHORT TO BATTERY	8662	86	62	N	N
LEFT TRACK REVERSE VALVE - SHORT TO GROUND	8663	86	63	N	N
SERVICE REQUIRED	870	87	0		
RETURN FILTER BYPASSED	871	87	1	N	N
CHARGE PUMP FILTER BYPASSED	872	87	2	N	N
HARDWARE	990	99	0		
EEPROM FAILURE - CHECK ALL SETTINGS	998	99	8	N	N
FUNCTIONS LOCKED OUT - PLATFORM MODULE SOFTWARE VERSION IMPROPER	9910	99	10	N	N
FUNCTIONS LOCKED OUT - PROPULSION MODULE SOFTWARE VERSION IMPROPER	9913	99	13	N	N
PLATFORM MODULE SOFTWARE UPDATE REQUIRED	9914	99	14	N	N
CHASSIS TILT SENSOR NOT GAIN CALIBRATED	9915	99	15	N	N
CHASSIS TILT SENSOR GAIN OUT OF RANGE	9916	99	16	N	N
HIGH RESOLUTION A2D FAILURE - INTERRUPT LOST	9917	99	17	N	N
HIGH RESOLUTION A2D FAILURE - REINIT LIMIT	9918	99	18	N	N
GROUND SENSOR REF VOLTAGE OUT OF RANGE	9919	99	19	N	N
PLATFORM SENSOR REF VOLTAGE OUT OF RANGE	9920	99	20	N	N
GROUND MODULE FAILURE - HIGH SIDE DRIVER CUTOUT FAULTY	9921	99	21	N	N
PLATFORM MODULE FAILURE - HWFS CODE 1	9922	99	22	N	N
GROUND MODULE FAILURE - HWFS CODE 1	9923	99	23	N	N
FUNCTIONS LOCKED OUT - MACHINE NOT CONFIGURED	9924	99	24	N	N
CURRENT FEEDBACK GAINS OUT OF RANGE	9944	99	44	N	N
CURRENT FEEDBACK CALIBRATION CHECKSUM INCORRECT	9945	99	45	N	N

Go to Discount-Equipment.com to order your parts

Analyzer Diagnostics Menu Structure

In the following structure descriptions, an intended item is selected by pressing ENTER; pressing ESC steps back to the next outer level. The LEFT/RIGHT arrow keys move between items in the same level. The UP/DOWN arrow keys alter a value if allowed

Table 6-12. ADJUSTMENTS - Personality Descriptions

DRIVE	
ACCEL . . .	Displays/adjusts drive acceleration
DECEL . . .	Displays/adjusts drive deceleration
MIN FORWARD . . .	Displays/adjusts minimum forward drive speed
MAX FORWARD . . .	Displays/adjusts maximum forward drive speed
MIN REVERSE . . .	Displays/adjusts minimum reverse drive speed
MAX REVERSE . . .	Displays/adjusts maximum reverse drive speed
ELEVATED MAX . . .	Displays/adjusts maximum drive speed NOTE: used when elevation cutout switches are limiting maximum speed
CREEP MAX . . .	Displays/adjusts maximum drive speed NOTE: used when creep switch on pump pot is active
STEER MAX . . .	Displays/adjusts the maximum steer speed
LIFT	
ACCEL . . .	Displays/adjusts upper lift acceleration
DECEL . . .	Displays/adjusts upper lift deceleration
MIN UP . . .	Displays/adjusts minimum upper lift up speed
MAX UP . . .	Displays/adjusts maximum upper lift up speed
CREEP UP . . .	Displays/adjusts maximum upper lift up speed NOTE: used when creep switch on pump pot is active
MIN DOWN . . .	Displays/adjusts minimum upper lift down speed
MAX DOWN . . .	Displays/adjusts maximum upper lift down speed
CREEP DOWN . . .	Displays/adjusts maximum upper lift down speed NOTE: used when creep switch on pump pot is active

Go to Discount-Equipment.com to order your parts

Table 6-12. ADJUSTMENTS - Personality Descriptions

SWING	
ACCEL . . .	Displays/adjusts swing acceleration
DECEL . . .	Displays/adjusts swing deceleration
MIN LEFT . . .	Displays/adjusts minimum swing left speed
MAX LEFT . . .	Displays/adjusts maximum swing left speed
CREEP LEFT . . .	Displays/adjusts maximum swing left speed NOTE: used when creep switch on pump pot is active
MIN RIGHT . . .	Displays/adjusts minimum swing right speed
MAX RIGHT . . .	Displays/adjusts maximum swing right speed
CREEP RIGHT . . .	Displays/adjusts maximum swing right speed NOTE: used when creep switch on pump pot is active
UPPER TELESCOPE	
ACCEL . . .	Displays/adjusts telescope acceleration
DECEL . . .	Displays/adjusts telescope deceleration
MIN IN . . .	Displays/adjusts minimum telescope in speed
MAX IN . . .	Displays/adjusts maximum telescope in speed
MIN OUT . . .	Displays/adjusts minimum telescope out speed
MAX OUT . . .	Displays/adjusts maximum telescope out speed
BASKET LEVEL	
ACCEL . . .	Displays/adjusts basket level acceleration
DECEL . . .	Displays/adjusts basket level deceleration
MIN UP . . .	Displays/adjusts minimum basket level up speed
MAX UP . . .	Displays/adjusts maximum basket level up speed
MIN DOWN . . .	Displays/adjusts minimum basket level down speed
MAX DOWN . . .	Displays/adjusts maximum basket level down speed
BASKET ROTATE	
ACCEL . . .	Displays/adjusts basket rotate acceleration
DECEL . . .	Displays/adjusts basket rotate deceleration
MIN LEFT . . .	Displays/adjusts minimum basket rotate left speed
MAX LEFT . . .	Displays/adjusts maximum basket rotate left speed
MIN RIGHT . . .	Displays/adjusts minimum basket rotate right speed
MAX RIGHT . . .	Displays/adjusts maximum basket rotate right speed
JIB LIFT	Not displayed if JIB = NO

Go to Discount-Equipment.com to order your parts

Table 6-12. ADJUSTMENTS - Personality Descriptions

ACCEL . . .	Displays/adjusts jib acceleration
DECEL . . .	Displays/adjusts jib deceleration
MIN UP . . .	Displays/adjusts minimum jib up speed
MAX UP . . .	Displays/adjusts maximum jib up speed
MIN DOWN . . .	Displays/adjusts minimum jib down speed
MAX DOWN . . .	Displays/adjusts maximum jib down speed
MIN LEFT . . .	Displays/adjusts minimum jib left speed
MAX LEFT . . .	Displays/adjusts maximum jib left speed
MIN RIGHT . . .	Displays/adjusts minimum jib right speed
MAX RIGHT . . .	Displays/adjusts maximum jib right speed
STEER	
MAX SPEED . . .	Displays/adjusts maximum steer speed, which applies when vehicle speed is at minimum
GROUND MODE	
LIFT UP . . .	Displays/adjusts fixed lift up speed
LIFT DOWN . . .	Displays/adjusts fixed lift down speed
SWING . . .	Displays/adjusts fixed swing speed
TELE . . .	Displays/adjusts fixed telescope speed
BASKET LEVEL . . .	Displays/adjusts fixed basket level speed
BASKET ROTATE . . .	Displays/adjusts fixed basket rotate speed
JIB (U/D) . . .	Displays/adjusts jib lift speed Not displayed if JIB = NO
JIB (L/R) . . .	Displays/adjusts jib swing speed Not displayed if JIB = NO

Go to Discount-Equipment.com to order your parts

Table 6-13. Diagnostic Menu Descriptions

DRIVE	
DRIVE FOR . . .	Displays drive joystick direction & demand
STEER . . .	Displays steer switch direction & demand NOTE: steer demand is inversely proportional to vehicle speed
BRAKES . . .	Displays brake control system status
CREEP . . .	Displays pump pot creep switch status
TWO SPEED ...	Displays two speed switch status
2 SPEED MODE	Displays status of two speed valve
HIGH ENGINE	Displays high engine switch status
BOOM	
U LIFT UP . . .	Displays lift joystick direction & demand
SWING LEFT . . .	Displays swing joystick direction & demand
LEVEL UP . . .	Displays basket level switch direction & demand NOTE: demand is controlled by the pump pot
ROT. LEFT . . .	Displays basket rotate switch direction & demand NOTE: demand is controlled by the pump pot
U TELE IN . . .	Displays telescope switch direction & demand NOTE: demand is controlled by the pump pot
JIB UP . . .	Displays jib lift switch direction & demand NOTE: demand is controlled by the pump pot Not displayed if JIB = NO
JIB LEFT . . .	Displays jib swing switch direction & demand NOTE: demand is controlled by the pump pot Not displayed if JIB = NO
PUMP POT . . .	Displays pump pot demand
ENGINE	
START . . .	Displays start switch status
AIR FILTER . . .	Displays air filter status
BATTERY . . .	Displays measured battery voltage
COOLANT . . .	Displays coolant temperature
OIL PRS . . .	Displays oil pressure status
FUEL SELECT . . .	Displays selected fuel (Dual Fuel only)
FUEL LEVEL . . .	Displays fuel level status
RPM	Displays Engine RPM
GM BATTERY	Displays battery voltage at ground module

Go to Discount-Equipment.com to order your parts

Table 6-13. Diagnostic Menu Descriptions

PM BATTERY . . .	Displays battery voltage at platform module
TEMP ...	Displays ground module temperature
ELEV. CUTOUT . . .	Displays elevation cutout switch status
FUNC. CUTOUT . . .	Displays function cutout switch status
CREEP. . .	Displays creep switch status
TILT . . .	Displays measured vehicle tilt
AUX POWER . . .	Displays status of auxiliary power switch
HORN . . .	Displays status of horn switch
R FILTER . . .	Displays status of return filter switch
C FILTER . . .	Displays status of charge pump filter
LOAD LENGTH . . .	Displays length switch status
ANGLE . . .	Displays angle switch status
LOAD . . .	Displays load sensor value NOTE: Not displayed if load = 0.
DATALOG	
ON . . .	Displays total controller on (EMS) time
ENGINE . . .	Displays engine run time
DRIVE . . .	Displays total controller drive operation time
LIFT . . .	Displays total controller lift operation time
SWING . . .	Displays total controller swing operation time
TELE . . .	Displays total controller tele operation time
MAX.TEMP . . .	Displays maximum measured heatsink temp.
MIN.TEMP . . .	Displays minimum measured heatsink temp.
MAX.VOLTS . . .	Displays maximum measured battery voltage
RENTAL . . .	Displays total controller operation time NOTE: can be reset
ERASE RENTAL	Not available at password level 2
YES:ENTER, NO:ESC	ENTER resets rental datalog time to zero
VERSIONS	
GROUND . . .	Displays ground module software version
PLATFORM . . .	Displays platform module software version
ANALYSER . . .	Displays Analyzer software version

Go to Discount-Equipment.com to order your parts

PARTS FINDER

Search Website by Part Number

Discount Equipment

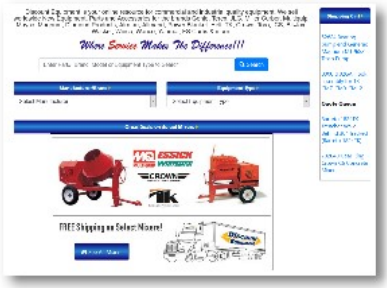

Search Manual Library For Parts Manual & Lookup Part Numbers – Purchase or Request Quote

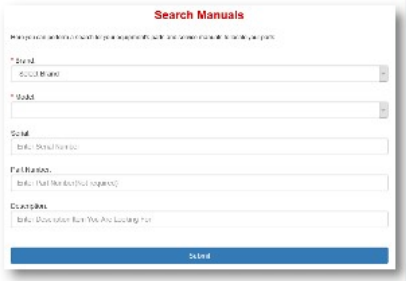

Can't Find Part or Manual? Request Help by Manufacturer, Model & Description

Discount-Equipment.com is your online resource for quality parts & equipment.
Florida: 561-964-4949 Outside Florida TOLL FREE: 877-690-3101

Go to Discount-Equipment.com to order your parts

Need parts?

Click on this link: http://www.discount-equipment.com/category/5443-parts/ and choose one of the options to help get the right parts and equipment you are looking for. Please have the machine model and serial number available in order to help us get you the correct parts. If you don't find the part on the website or on once of the online manuals, please fill out the request form and one of our experienced staff members will get back to you with a quote for the right part that your machine needs.

We sell worldwide for the brands: Genie, Terex, JLG, MultiQuip, Mikasa, Essick, Whiteman, Mayco, Toro Stone, Diamond Products, Generac Magnum, Airman, Haulotte, Barreto, Power Blanket, Nifty Lift, Atlas Copco, Chicago Pneumatic, Allmand, Miller Curber, Skyjack, Lull, Skytrak, Tsurumi, Husquvarna Target, , Stow, Wacker, Sakai, Mi-T- M, Sullair, Basic, Dynapac, MBW, Weber, Bartell, Bennar Newman, Haulotte, Ditch Runner, Menegotti, Morrison, Contec, Buddy, Crown, Edco, Wyco, Bomag, Laymor, Barreto, EZ Trench, Bil-Jax, F.S. Curtis, Gehl Pavers, Heli, Honda, ICS/PowerGrit, IHI, Partner, Imer, Clipper, MMD, Koshin, Rice, CH&E, General Equipment, ,AMida, Coleman, NAC, Gradall, Square Shooter, Kent, Stanley, Tamco, Toku, Hatz, Kohler, Robin, Wisconsin, Northrock, Oztec, Toker TK, Rol-Air, Small Line, Wanco, Yanmar

SECTION 7. BASIC ELECTRICAL INFORMATION & SCHEMATICS

7.1 GENERAL

This section contains basic electrical information and schematics to be used for locating and correcting most of the operating problems which may develop. If a problem should develop which is not presented in this section or which is not corrected by listed corrective actions, technically qualified guidance should be obtained before proceeding with any maintenance.

NOTE: *Some of the procedures/connectors shown in this section may not be applicable to all models.*

7.2 MULTIMETER BASICS

A wide variety of multimeters or Volt Ohm Meters (VOM) can be used for troubleshooting your equipment. This section shows diagrams of a common, digital VOM configured for several different circuit measurements. Instructions for your VOM may vary. Please consult the meter operator's manual for more information.

Grounding

"Grounding the meter" means to take the black lead (which is connected to the COM (common) or negative port) and touch it to a good path to the negative side of the Voltage source.

Backprobing

To "backprobe" means to take the measurement by accessing a connector's contact on the same side as the wires, the back of the connector. Readings can be done while maintaining circuit continuity this way. If the connector is the sealed type, great care must be taken to avoid damaging the seal around the wire. It is best to use probes or probe tips specifically designed for this technique, especially on sealed connectors. Whenever possible insert probes into the side of the connector such that the test also checks both terminals of the connection. It is possible to inspect a connection within a closed connector by backprobing both sides of a connector terminal and measuring resistance. Do this after giving each wire a gentle pull to ensure the wires are still attached to the contact and contacts are seated in the connector.

Min/Max

Use of the "Min/Max" recording feature of some meters can help when taking measurements of intermittent conditions while alone. For example, you can read the Voltage applied to a solenoid when it is only operational while a switch, far from the solenoid and meter, is held down.

Polarity

Getting a negative Voltage or current reading when expecting a positive reading frequently means the leads are reversed. Check what reading is expected, the location of the signal and that the leads are connected to the device under test correctly. Also check that the lead on the "COM" port goes to the Ground or negative side of the signal and the lead on the other port goes to the positive side of the signal.

Scale

M = Mega = 1,000,000 * (Displayed Number)

k = kilo = 1,000 * (Displayed Number)

m = milli = (Displayed Number) / 1,000

µ = micro = (Displayed Number) / 1,000,000

Example: 1.2 kW = 1200 W
Example: 50 mA = 0.05 A

Voltage Measurement

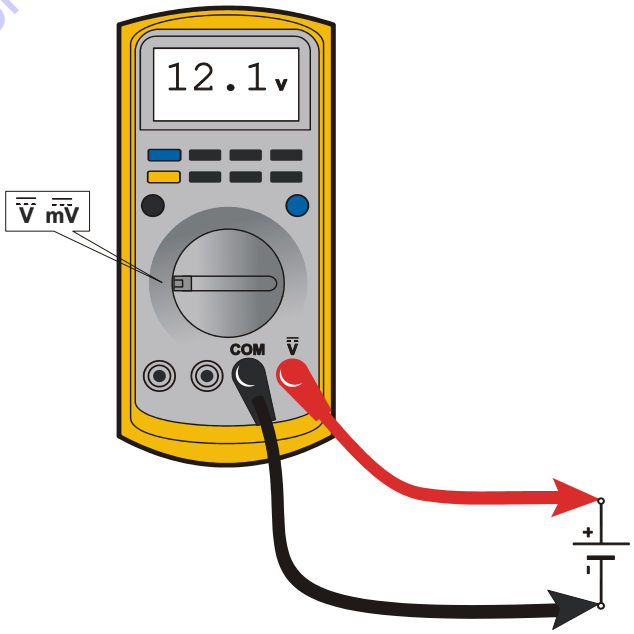

Figure 7-1. Voltage Measurement (DC)

- If meter is not auto ranging, set it to the correct range. (See multimeter's operation manual.)
- Use firm contact with meter leads.

Go to Discount-Equipment.com to order your parts

Resistance Measurement

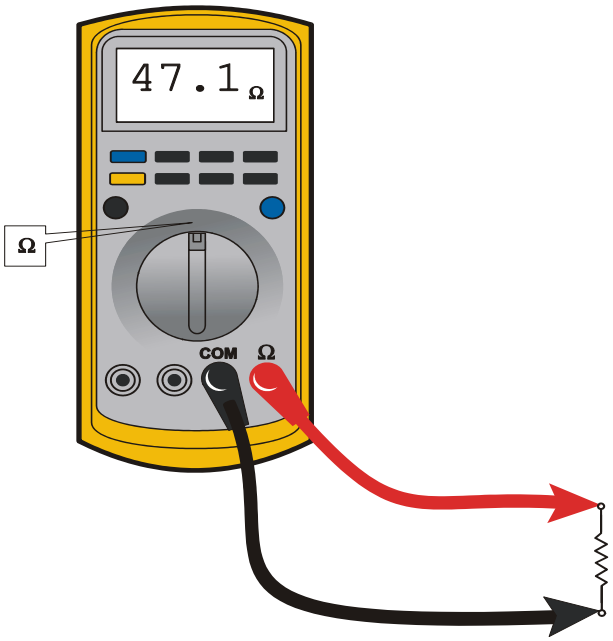

Figure 7-2. Resistance Measurement

- First test meter and leads by touching leads together. Resistance should read a short circuit (very low resistance).
- Circuit power must be turned OFF before testing resistance.
- Disconnect component from circuit before testing.
- If meter is not auto ranging, set it to the correct range. (See multimeter's operation manual.)
- Use firm contact with meter leads.

Continuity Measurement

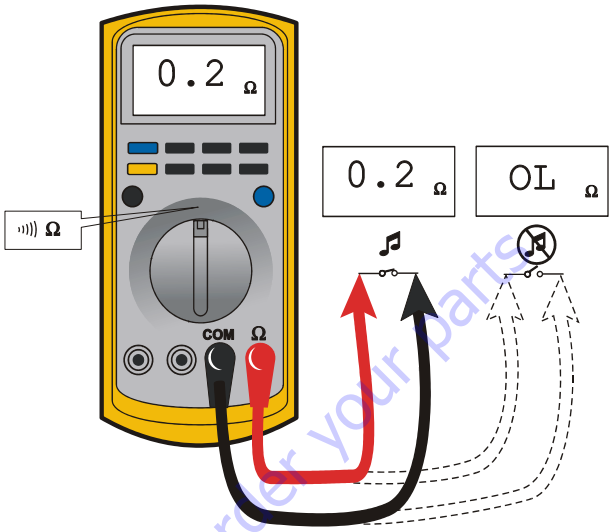

Figure 7-3. Continuity Measurement

- Some meters require a separate button press to enable audible continuity testing.
- Circuit power must be turned OFF before testing continuity.
- Disconnect component from circuit before testing.
- Use firm contact with meter leads.
- First test meter and leads by touching leads together. Meter should produce an audible alarm, indicating continuity.

Go to Discount-Equipment.com to order your parts

Current Measurement

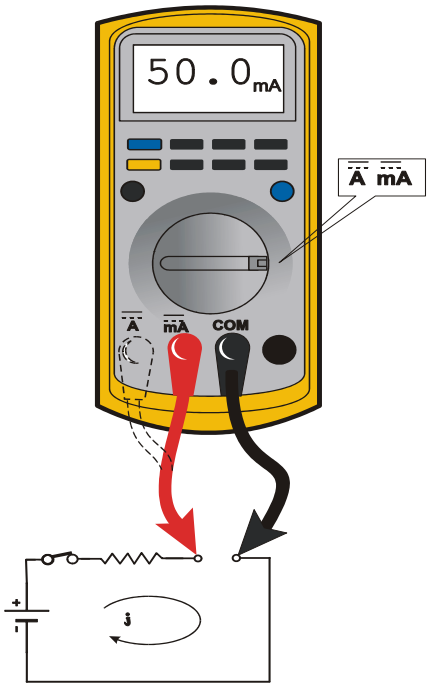

Figure 7-4. Current Measurement (DC)

- Set up the meter for the expected current range.
- Be sure to connect the meter leads to the correct jacks for the current range you have selected.
- If meter is not auto ranging, set it to the correct range. (See multimeter's operation manual.)
- Use firm contact with meter leads.

7.3 APPLYING SILICONE DIELECTRIC COMPOUND TO ELECTRICAL CONNECTIONS

NOTE: *This section is not applicable for battery terminals.*

NOTICE

JLG P/N 0100048 DIELECTRIC GREASE (NOVAGARD G661) IS THE ONLY MATERIAL APPROVED FOR USE AS A DIELECTRIC GREASE.

NOTE: *Do NOT apply dielectric grease to the following connections:*

- Main Boom Rotary sensor connections (on Celesco Sensor).
- LSS Modules connections.
- Deutz EMR 2 ECM connection.

Silicone Dielectric Compound must be used on all electrical connections except for those mentioned above for the following reasons:

- To prevent oxidation at the mechanical joint between male and female pins.
- To prevent electrical malfunction caused by low level conductivity between pins when wet.

Use the following procedure to apply Silicone Dielectric Compound to the electrical connectors. This procedure applies to all plug connections not enclosed in a box. Silicone grease should not be applied to connectors with external seals.

1. To prevent oxidation, silicone grease must be packed completely around male and female pins on the inside of the connector prior to assembly. This is most easily achieved by using a syringe.

NOTE: *Over a period of time, oxidation increases electrical resistance at the connection, eventually causing circuit failure.*

2. To prevent shorting, silicone grease must be packed around each wire where they enter the outside of the connector housing. Also, silicone grease must be applied at the joint where the male and female connectors come together. Any other joints (around strain reliefs, etc.) where water could enter the connector should also be sealed.

NOTE: *This condition is especially common when machines are pressure washed since the washing solution is much more conductive than water.*

Go to Discount-Equipment.com to order your parts

3. Anderson connectors for the battery boxes and battery chargers should have silicone grease applied to the contacts only.

NOTE: *Curing-type sealants might also be used to prevent shorting and would be less messy, but would make future pin removal more difficult.*

When applied to electrical connections, dielectric grease helps to prevent corrosion of electrical contacts and improper conductivity between contacts from moisture intrusion. Open and sealed connectors benefit from the application of dielectric grease.

Dielectric grease shall be applied to all electrical connectors at the time of connection (except those noted under Exclusions).

Installation of Dielectric Grease

Before following these instructions, refer to excluded connector types (See Exclusions below).

1. Use dielectric grease in a tube for larger connection points or apply with a syringe for small connectors.
2. Apply dielectric grease to the female contact (fill it approximately ½ full; see example below).
3. Leave a thin layer of dielectric grease on the face of the connector.
4. Assemble the connector system immediately to prevent moisture ingress or dust contamination.
5. Pierce one of the unused wire seals prior to assembly if the connector system tends to trap air (i.e. AMP Seal) and then install a seal plug.

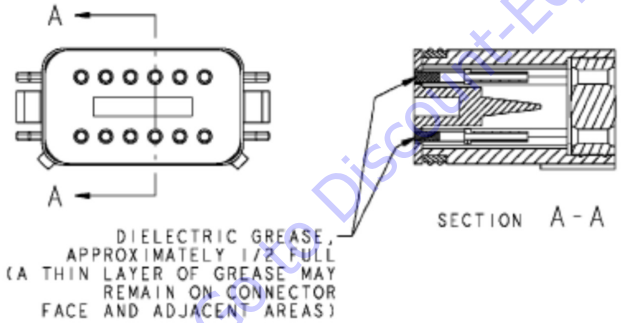

Deutsch HD, DT, DTM, DRC Series

The Deutsch connector system is commonly used for harsh environment interconnect. Follow the installation instructions.

AWP Seal

The AMP Seal connector system is used on the Control ADE Platform and Ground Modules.

Apply dielectric grease to the female contact. If trapped air prevents the connector from latching, pierce one of the unused wire seals. After assembly, install a seal plug (JLG #4460905) in that location to prevent moisture ingress.

Note that seal plugs may be installed by the wire harness manufacturer if an unused wire seal becomes compromised (wire inserted in the wrong cavity during assembly and then corrected).

Figure 7-5. Application to plug/male connector housing

GT Discount-Equipment.com to order your parts

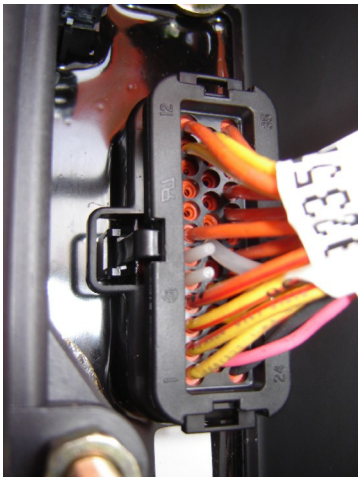

Figure 7-6. Use of Seal Plugs

AMP Mate-N-Lock

This connector system is widely used inside enclosures for general purpose interconnect. Follow the general guidance for installation.

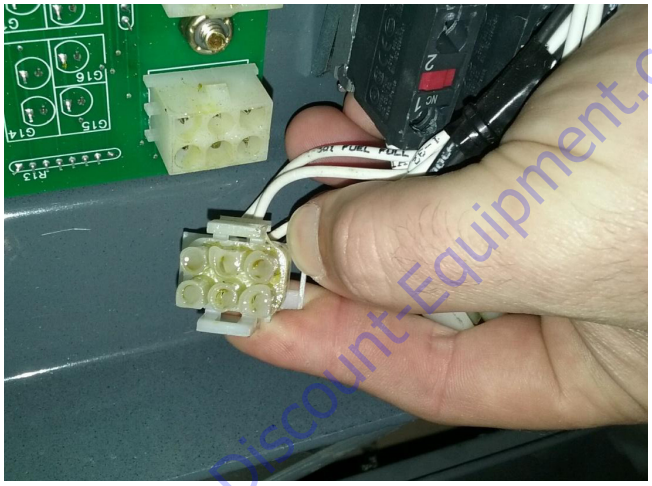

DIN Connectors

This connector is typically used on hydraulic valves. Follow the installation instructions.

Exclusions

A limited number of connectors do not benefit from dielectric grease, or may be permanently damaged by application. Dielectric grease may not be required in properly sealed enclosures.

Go to Discount-Equipment.com to order your parts

BRAD HARRISON / PHOENIX CONTACT M12

The connector uses gold contact material to resist corrosion and an o-ring seal for moisture integrity. If dielectric grease is mistakenly applied to this connector system, the low-force contacts cannot displace the grease to achieve electrical contact. Once contaminated, there is no practical way to remove the dielectric grease (replacement of female contacts required). The JLG Load Sensing System and Rotary Angle Sensors are examples of components with the M12 connector system.

Figure 7-7. Brad-Harrison M12

Figure 7-8. Phoenix Contact M12

ENGINE CONTROL UNIT CONNECTORS

Many times, these types of connectors use back-seals for moisture integrity. However, the low-force contacts cannot displace dielectric grease and create electrical contact. It is possible to use solvents (i.e. contact cleaner or mineral spirits) for the removal of improperly applied dielectric grease. The EMR4 engine control module from Deutz employs this connector system (for example).

SEALED ENCLOSURES

Application of dielectric grease is not required in properly sealed enclosures. To meet criteria, the enclosure must be rated to at least IP66 (dust tight; protected from powerful jets of water). The enclosure must be fitted with a high quality, continuous gasket and all wiring must pass through cable entrances.

Go to Discount-Equipment.com to order your parts

MIL-C-5015 SPEC CONNECTOR'S

Crown Connector Inc's recommendation is to not use dielectric grease for this series connector. For similar model series connectors, the manufacturer should be contacted for confirmation before applying dielectric grease. A typical application for this connector is on David Clark Intercom connections in Aerial Work Platforms.

MOLEX CMC SERIES CONNECTORS

The CMC connector family is a sealed, high-density connection system using matte-seal technology for CP 0.635 and 1.50 mm terminals. To guarantee IP6K7 and IP6K9 sealing, a seal plug option is used. However, the low-force contacts cannot displace dielectric grease and create electrical contact. It is possible to use solvents (i.e. contact cleaner or mineral spirits) for the removal of improperly applied dielectric grease. The flexbox control modules from JDES employ this connector system (for example).

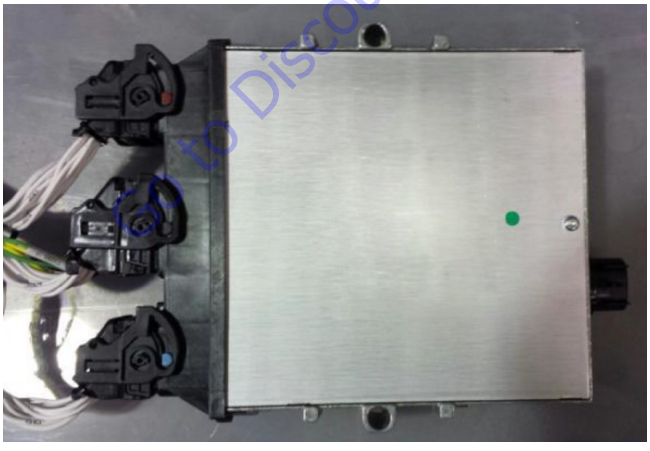

7.4 AMP CONNECTOR

Applying Silicone Dielectric Compound to AMP Connectors

Silicone Dielectric Compound must be used on the AMP connections for the following reasons:

- To prevent oxidation at the mechanical joint between male and female pins.
- To prevent electrical malfunction caused by low level conductivity between pins when wet.

Use the following procedure to apply Silicone Dielectric Compound to the electrical connectors.

1. To prevent oxidation and low level conductivity, silicone dielectric grease must be packed completely around male and female pins on the inside of the connector after the mating of the housing to the header. This is easily achieved by using a syringe to fill the header with silicone dielectric compound, to a point just above the top of the male pins inside the header. When assembling the housing to the header, it is possible that the housing will become air locked, thus preventing the housing latch from engaging.
2. Pierce one of the unused wire seals to allow the trapped air inside the housing to escape.
3. Install a hole plug into this and/or any unused wire seal that has silicone dielectric compound escaping from it.

Go to DiscountEquipment.com to order your parts

Assembly

Check to be sure the wedge lock is in the open, or as-shipped, position. (See Figure 7-9.) Proceed as follows:

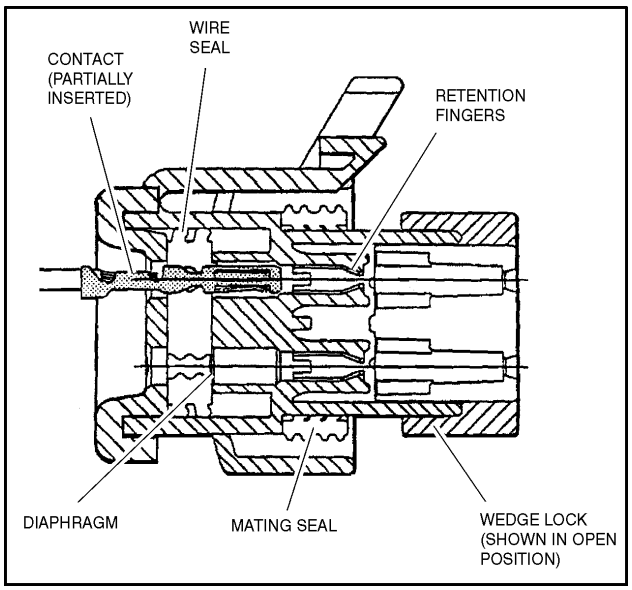

Figure 7-9. Connector Assembly Figure 1

1. To insert a contact, push it straight into the appropriate circuit cavity as far as it will go. (See Figure 7-11.)
2. Pull back on the contact wire with a force of 1 or 2 lbs. to be sure the retention fingers are holding the contact. (See Figure 7-11.)

Go to Discount-Equipment.com to order your parts

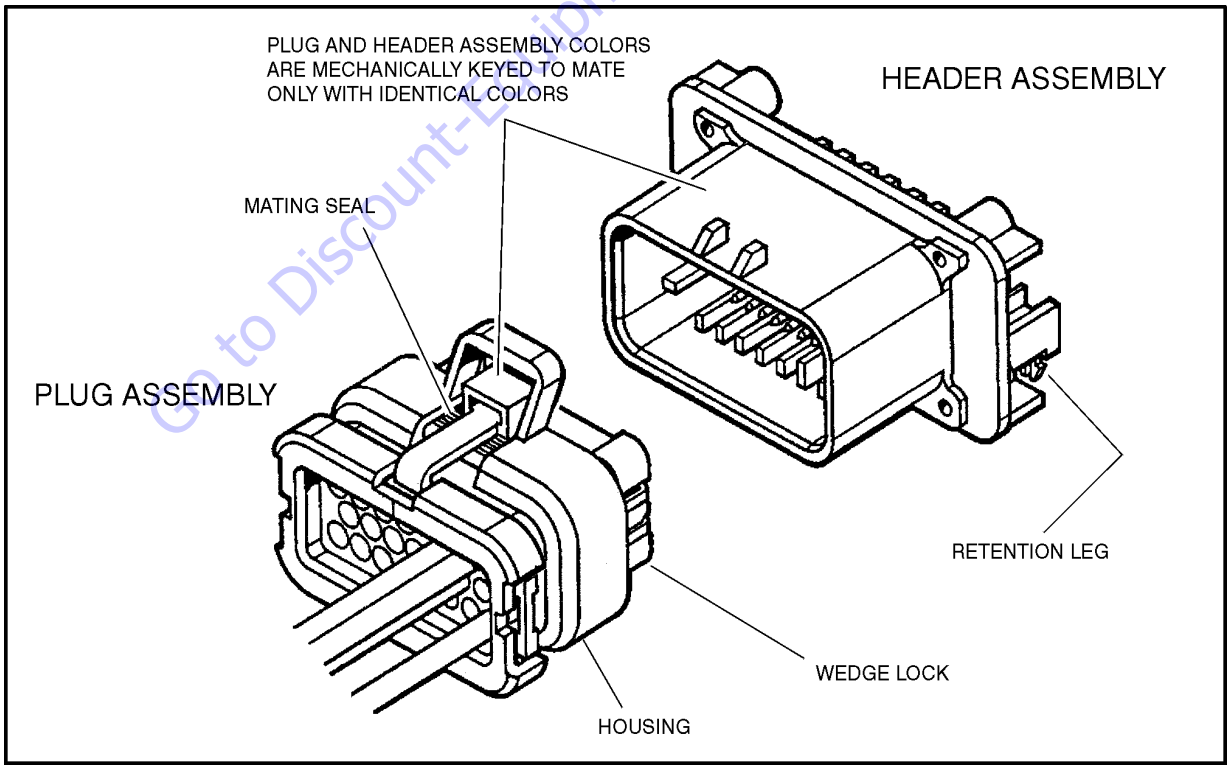

Figure 7-10. AMP Connector

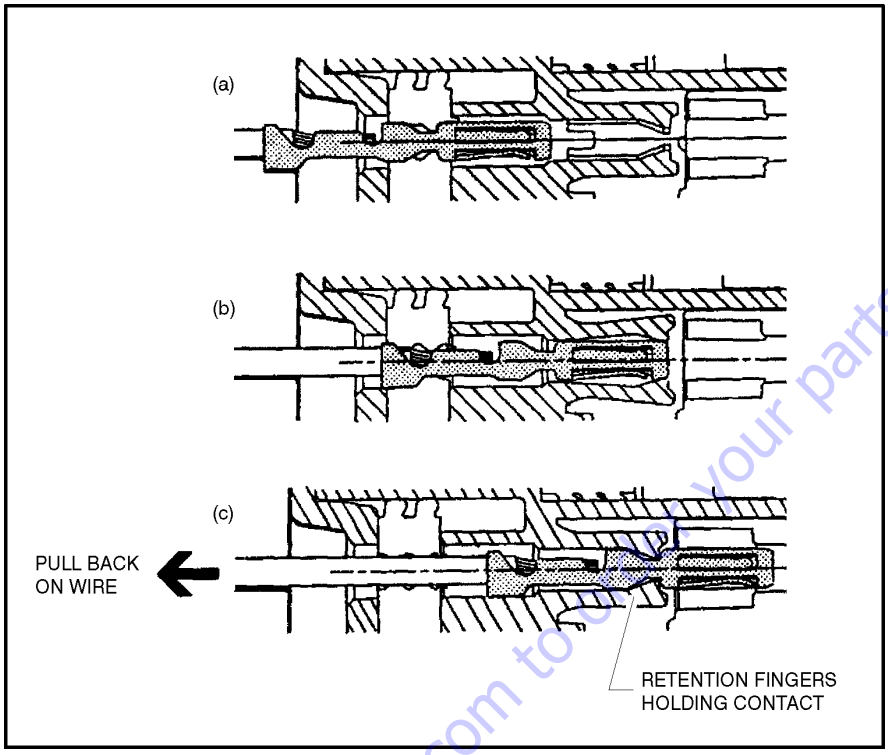

Figure 7-11. Connector Assembly Figure 2

3. After all required contacts have been inserted, the wedge lock must be closed to its locked position. Release the locking latches by squeezing them inward. (See Figure 7-12.)

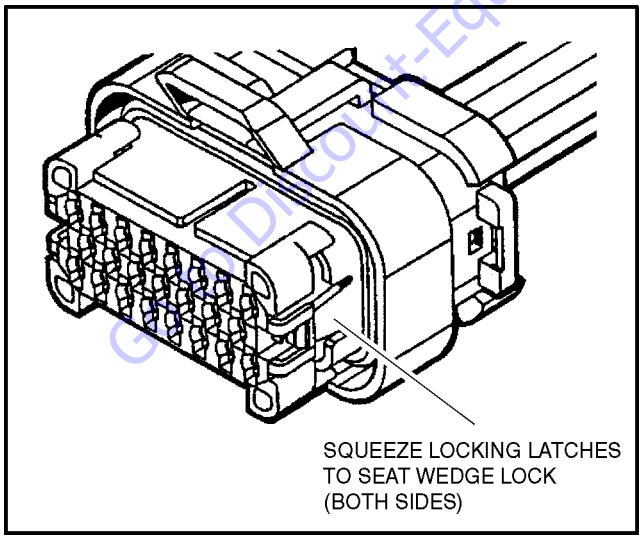

Figure 7-12. Connector Assembly Figure 3

4. Slide the wedge lock into the housing until it is flush with the housing. (See Figure 7-13.)

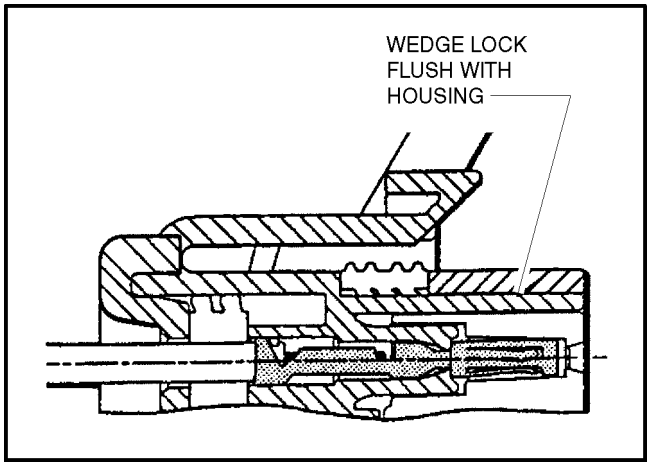

Figure 7-13. Connector Assembly Figure 4

Get Discount-Equipment.com to order your parts

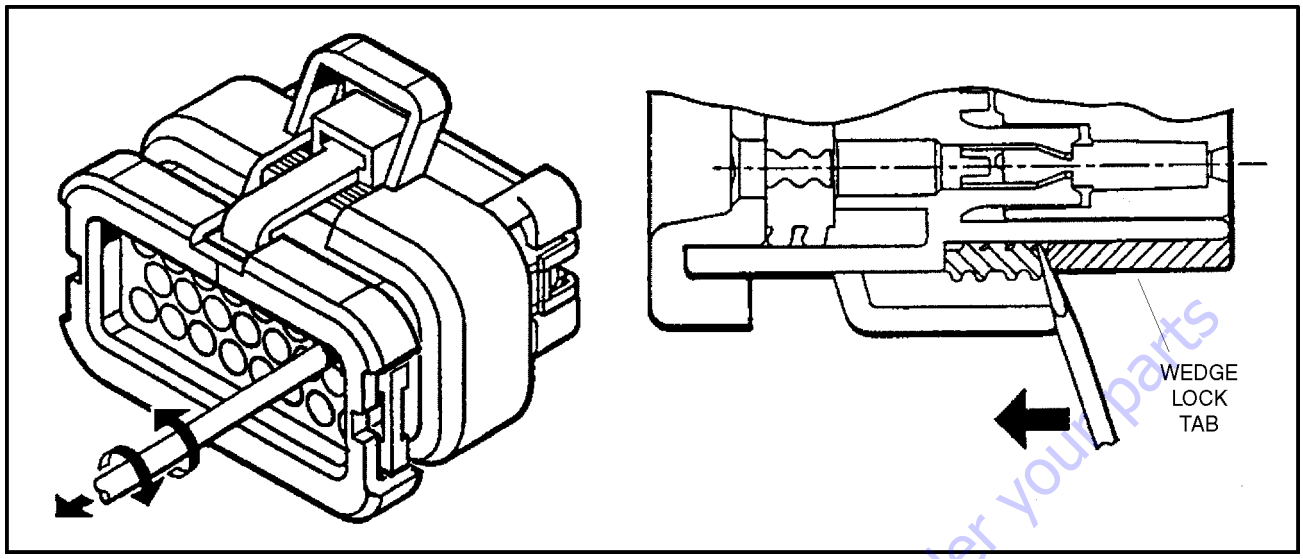

Figure 7-14. Connector Disassembly

Disassembly

1. Insert a 4.8 mm (3/16 in.) wide screwdriver blade between the mating seal and one of the red wedge lock tabs.
2. Pry open the wedge lock to the open position.
3. While rotating the wire back and forth over a half turn (1/4 turn in each direction), gently pull the wire until the contact is removed.

NOTE: *The wedge lock should never be removed from the housing for insertion or removal of the contacts.*

Wedge Lock

The wedge lock has slotted openings in the forward, or mating end. These slots accommodate circuit testing in the field, by using a flat probe such as a pocket knife. DO NOT use a sharp point such as an ice pick.

Service - Voltage Reading

NOTICE

DO NOT PIERCE WIRE INSULATION TO TAKE VOLTAGE READINGS.

It has been common practice in electrical troubleshooting to probe wires by piercing the insulation with a sharp point. This practice should be discouraged when dealing with the AMPSEAL plug assembly, or any other sealed connector system. The resulting pinholes in the insulation will allow moisture to invade the system by traveling along the wire strands. This nullifies the effectiveness of the connector seals and could result in system failure.

Go to Discount-Equipment.com to order your parts

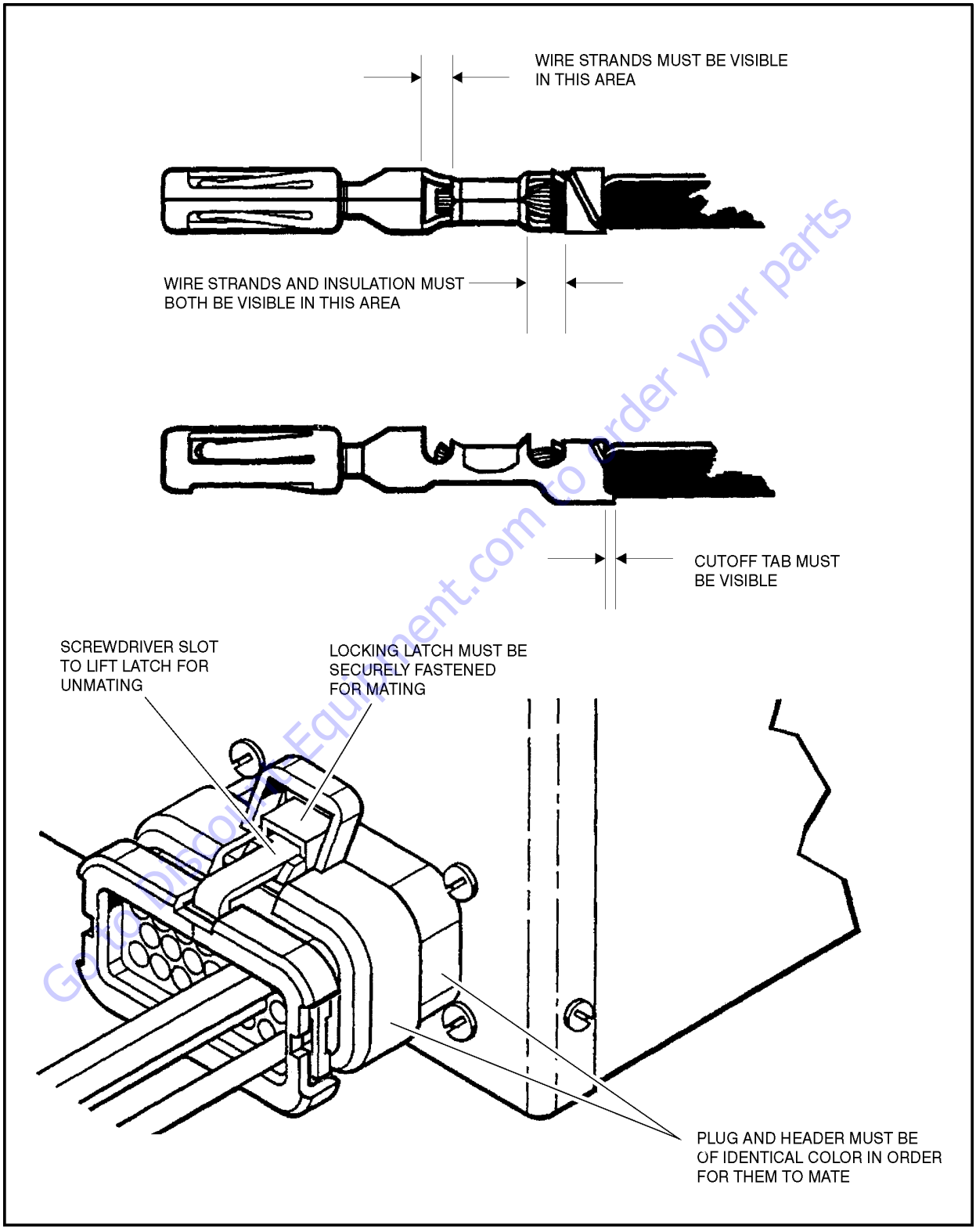

Go to Discount-Equipment.com to order your parts

Figure 7-15. Connector Installation

7.5 DEUTSCH CONNECTORS

DT/DTP Series Assembly

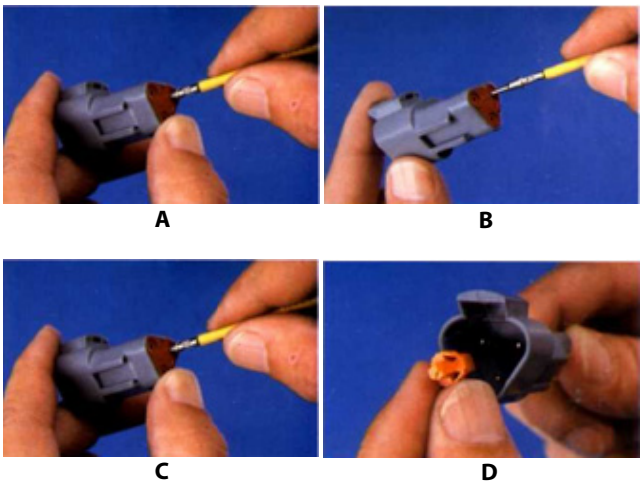

Figure 7-16. DT/DTP Contact Installation

1. Grasp crimped contact about 25mm behind the contact barrel.
2. Hold connector with rear grommet facing you.
3. Push contact straight into connector grommet until a click is felt. A slight tug will confirm that it is properly locked in place.
4. Once all contacts are in place, insert wedgelock with arrow pointing toward exterior locking mechanism. The wedgelock will snap into place. Rectangular wedges are not oriented. Thy may go in either way.

NOTE: *The receptacle is shown - use the same procedure for plug.*

DT/DTP Series Disassembly

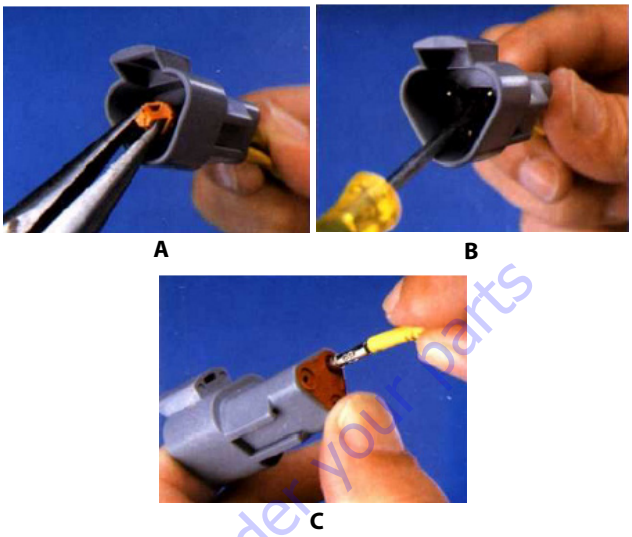

Figure 7-17. DT/DTP Contact Removal

1. Remove wedgelock using needle nose pliers or a hook shaped wire to pull wedge straight out.
2. To remove the contacts, gently pull wire backwards, while at the same time releasing the locking finger by moving it away from the contact with a screwdriver.
3. Hold the rear seal in place, as removing the contact may displace the seal.

Go to Discount-Equipment.com to order your parts

HD30/HDP20 Series Assembly

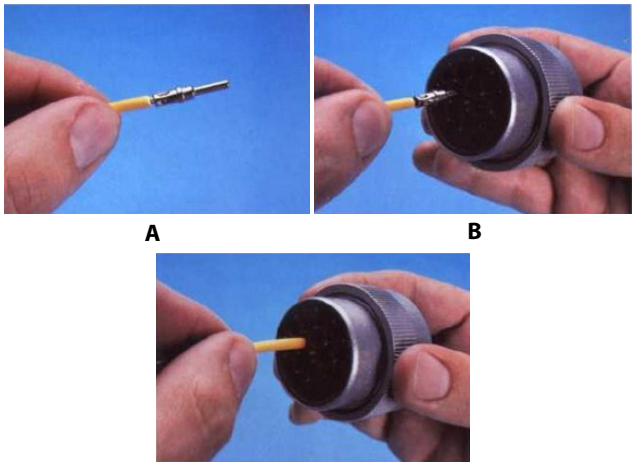

Figure 7-18. HD/HDP Contact Installation

1. Grasp contact about 25mm behind the contact crimp barrel.
2. Hold connector with rear grommet facing you.
3. Push contact straight into connector grommet until a positive stop is felt. A slight tug will confirm that it is properly locked in place.

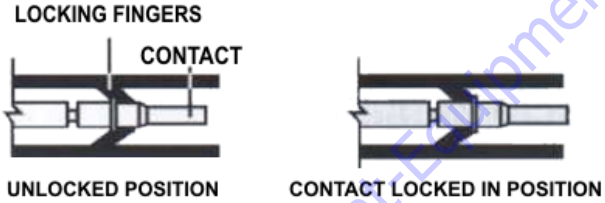

Figure 7-19. HD/HDP Locking Contacts Into Position

NOTE: *For unused wire cavities, insert sealing plugs for full environmental sealing.*

HD30/HDP20 Series Disassembly

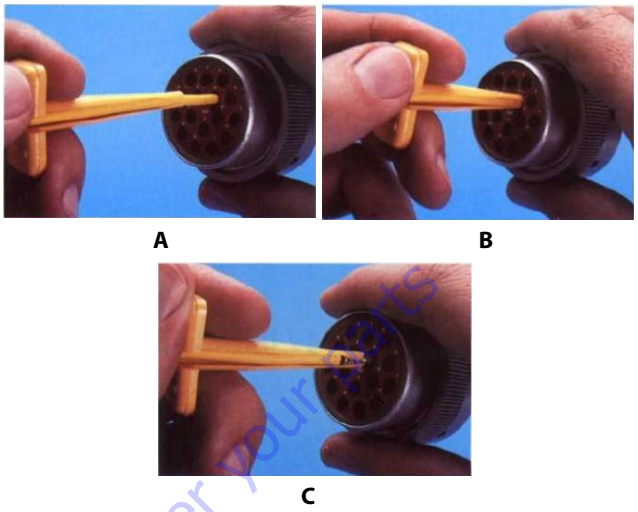

Figure 7-20. HD/HDP Contact Removal

1. With rear insert toward you, snap appropriate size extractor tool over the wire of contact to be removed.
2. Slide tool along into the insert cavity until it engages contact and resistance is felt.
3. Pull contact-wire assembly out of connector.

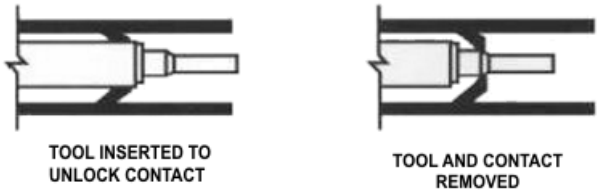

Figure 7-21. HD/HDP Unlocking Contacts

NOTE: *Do Not twist or insert tool at an angle.*

Go to Discount-Equipment.com to order your parts

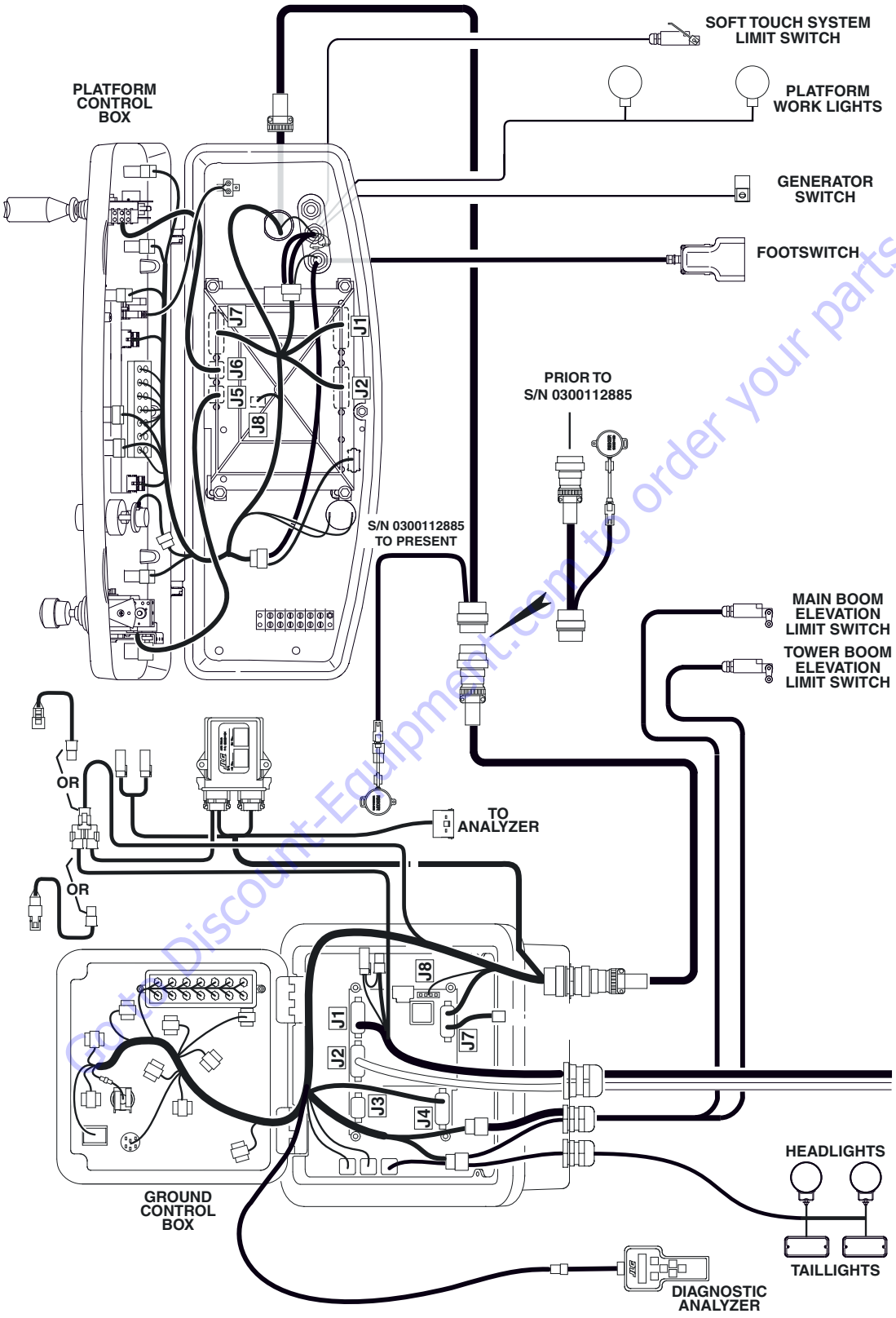

Figure 7-22. Electrical Components Installation (Prior to SN 0300135982) - Sheet 1 of 2

Genie Discount-Equipment.com to order your parts

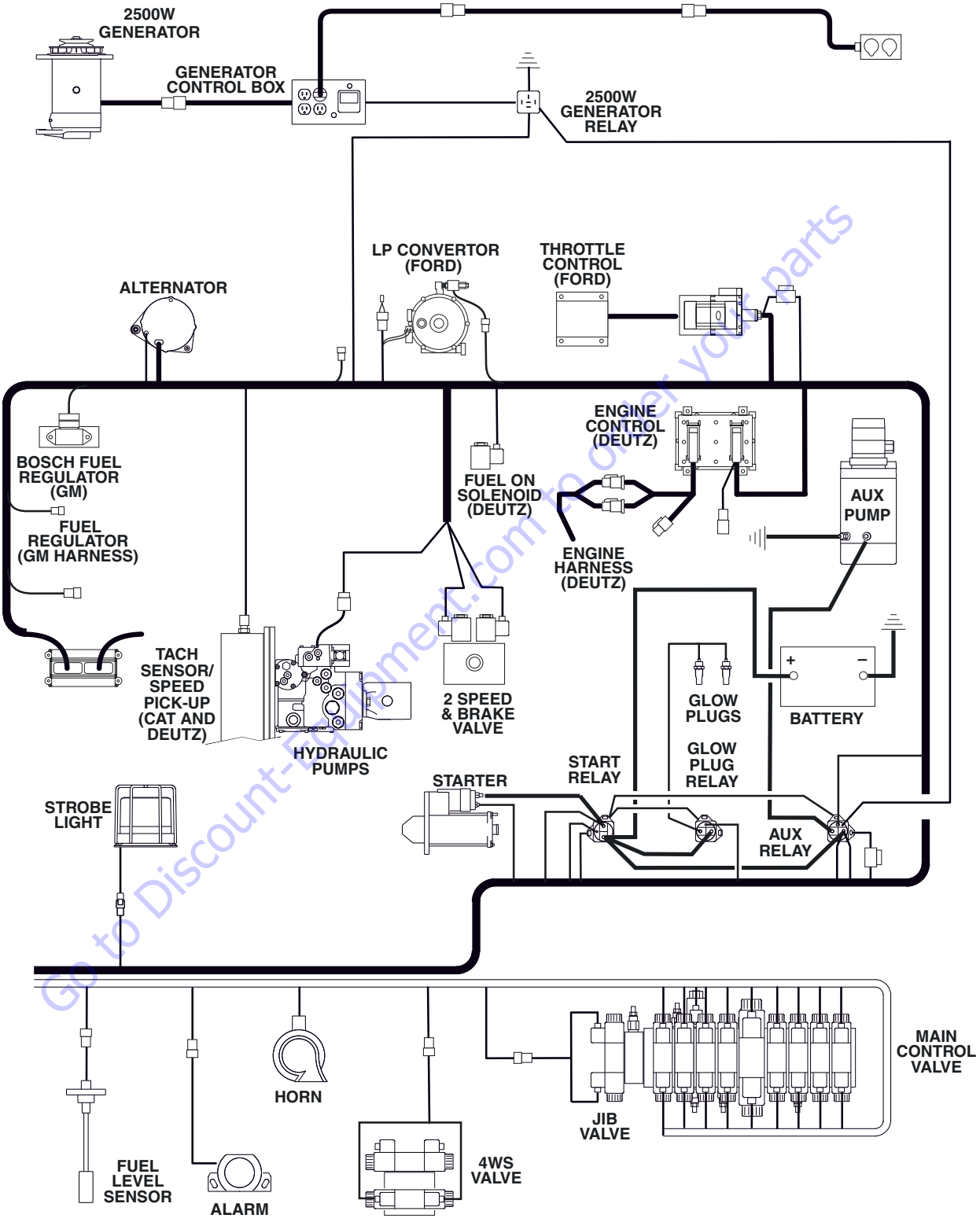

Go to Discount-Equipment.com to order your parts

Figure 7-23. Electrical Components Installation (Prior to SN 0300135982) - Sheet 2 of 2

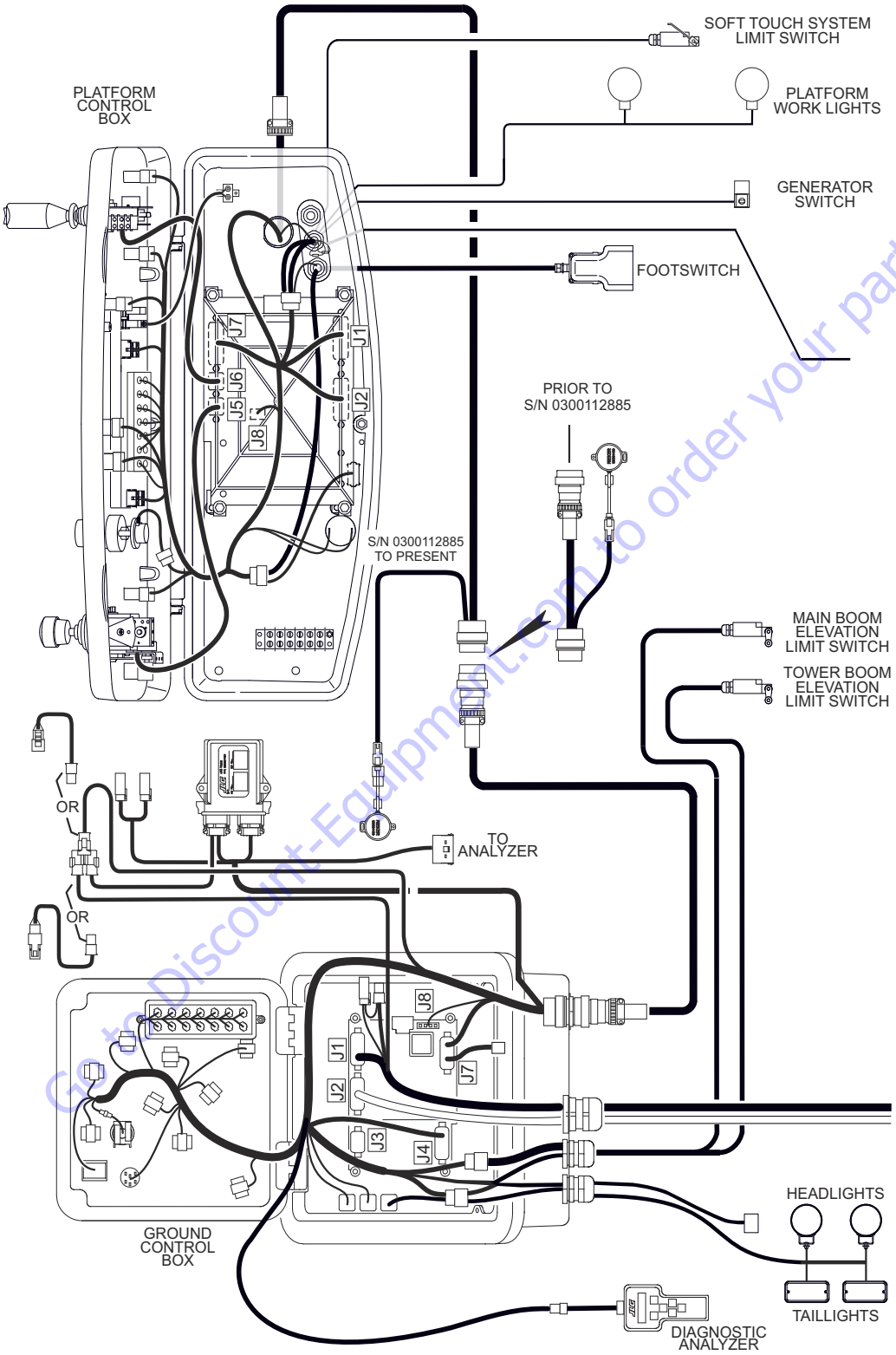

Go to Discount-Equipment.com to order your parts

Figure 7-24. Electrical Components Installation Without UGM (SN 0300135982 through 0300185827) - Sheet 1 of 2

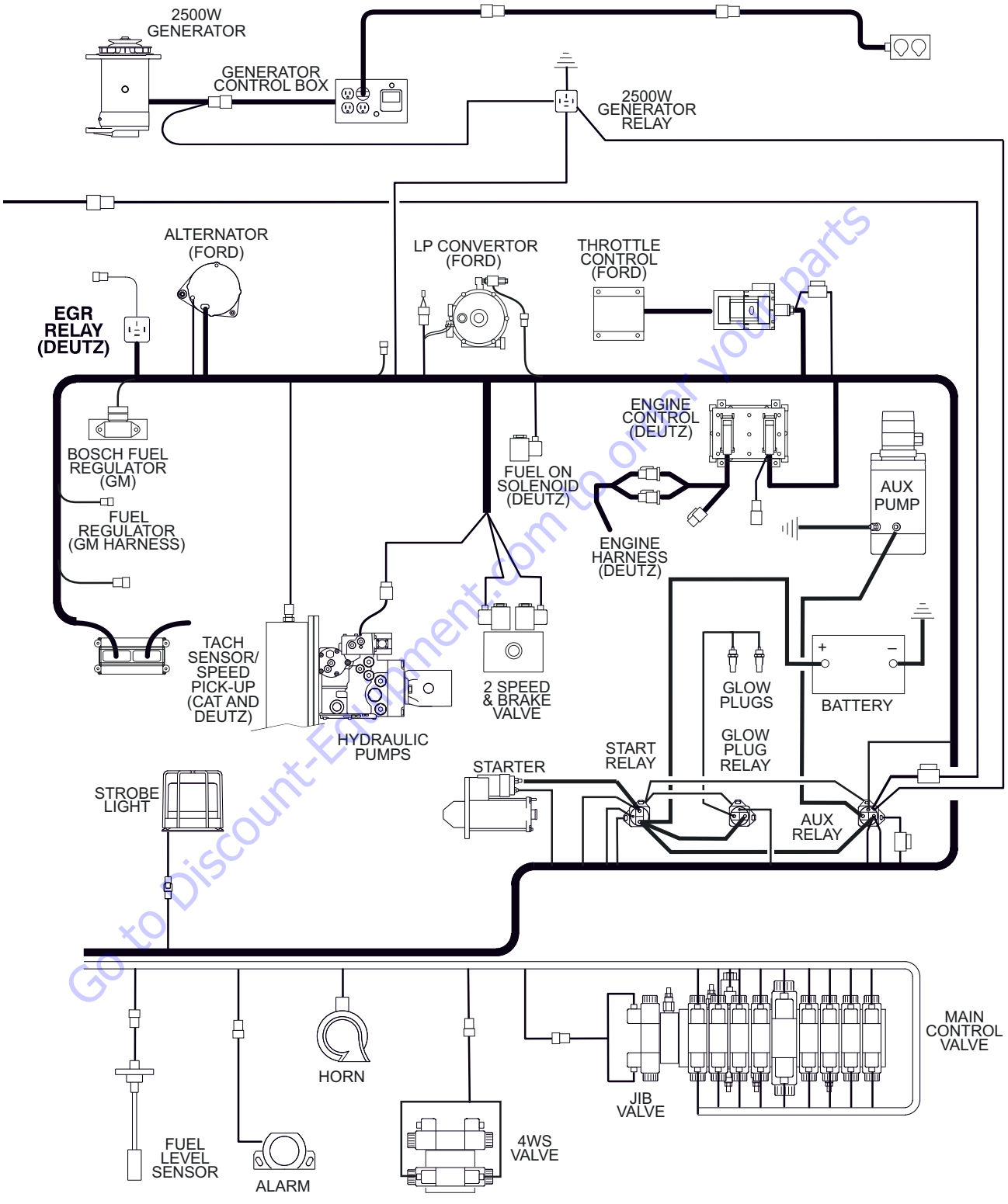

Go to Discount-Equipment.com to order your parts

Figure 7-25. Electrical Components Installation Without UGM (SN 0300135982 through 0300185827) - Sheet 2 of 2

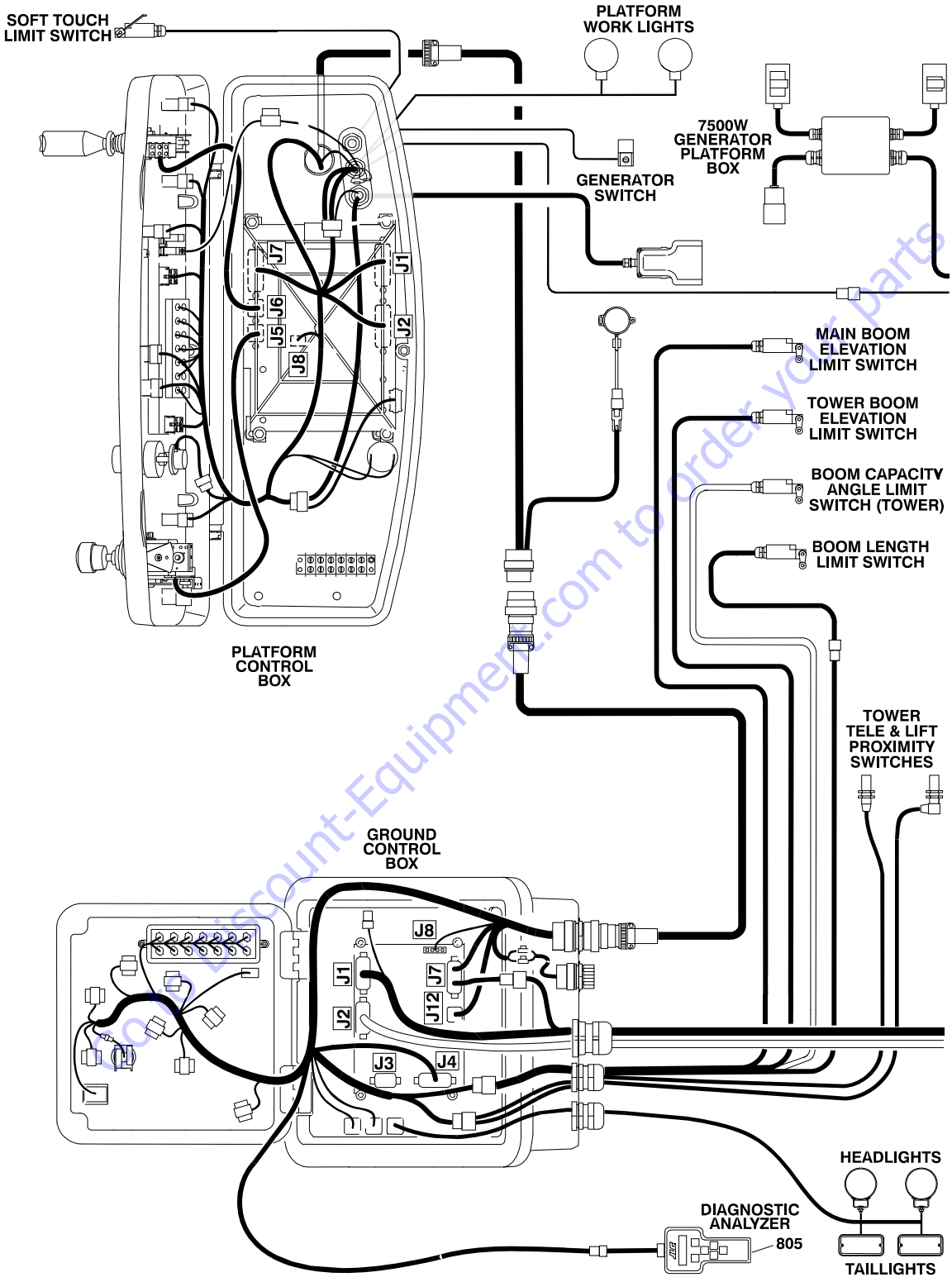

Genie Discount-Equipment.com to Order your parts

Figure 7-26. Electrical Components Installation With UGM - Sheet 1 of 2

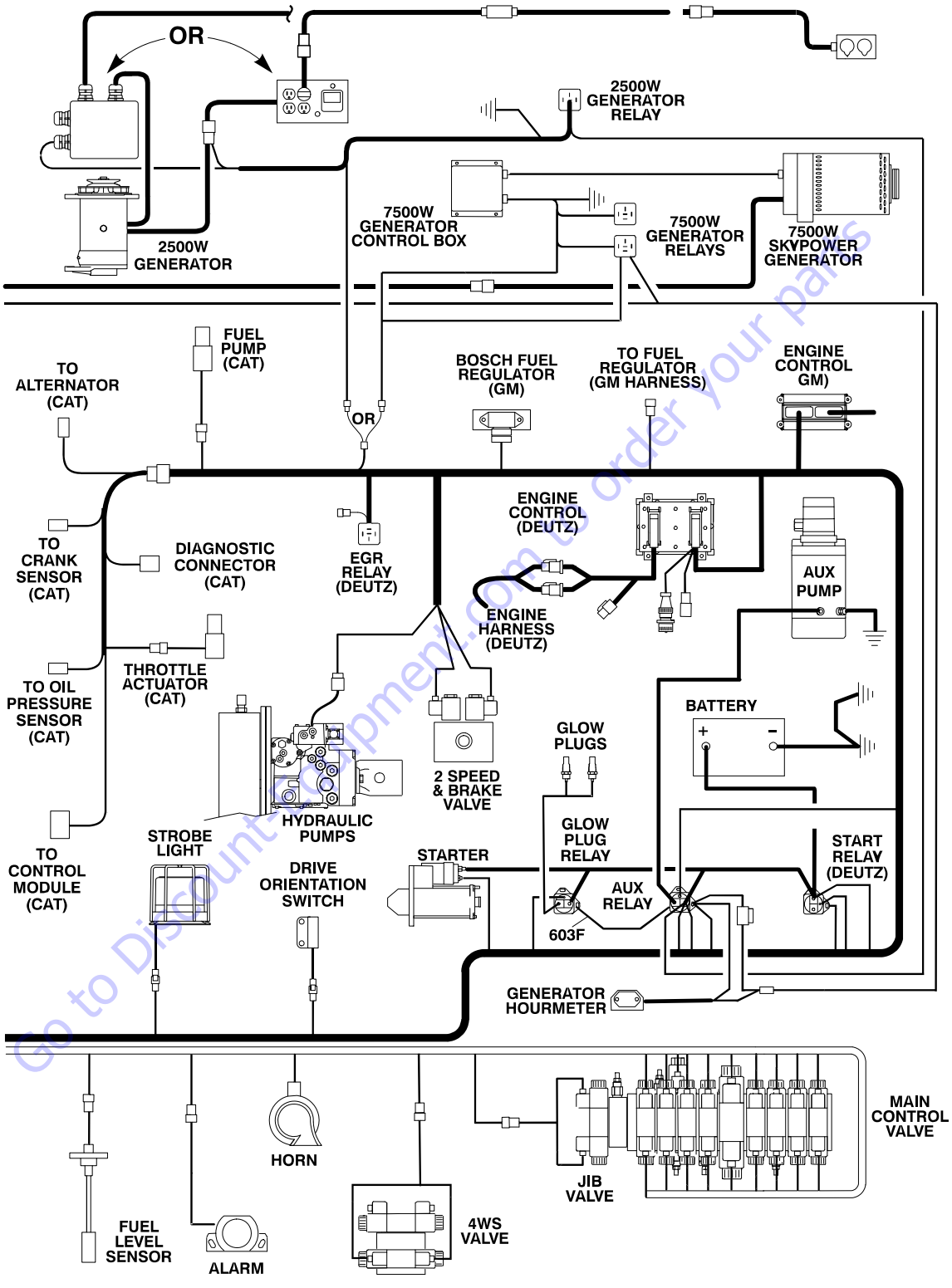

Go to Discount-Equipment.com to order your parts

Figure 7-27. Electrical Components Installation With UGM - Sheet 2 of 2

7.6 ELECTRICAL SCHEMATICS

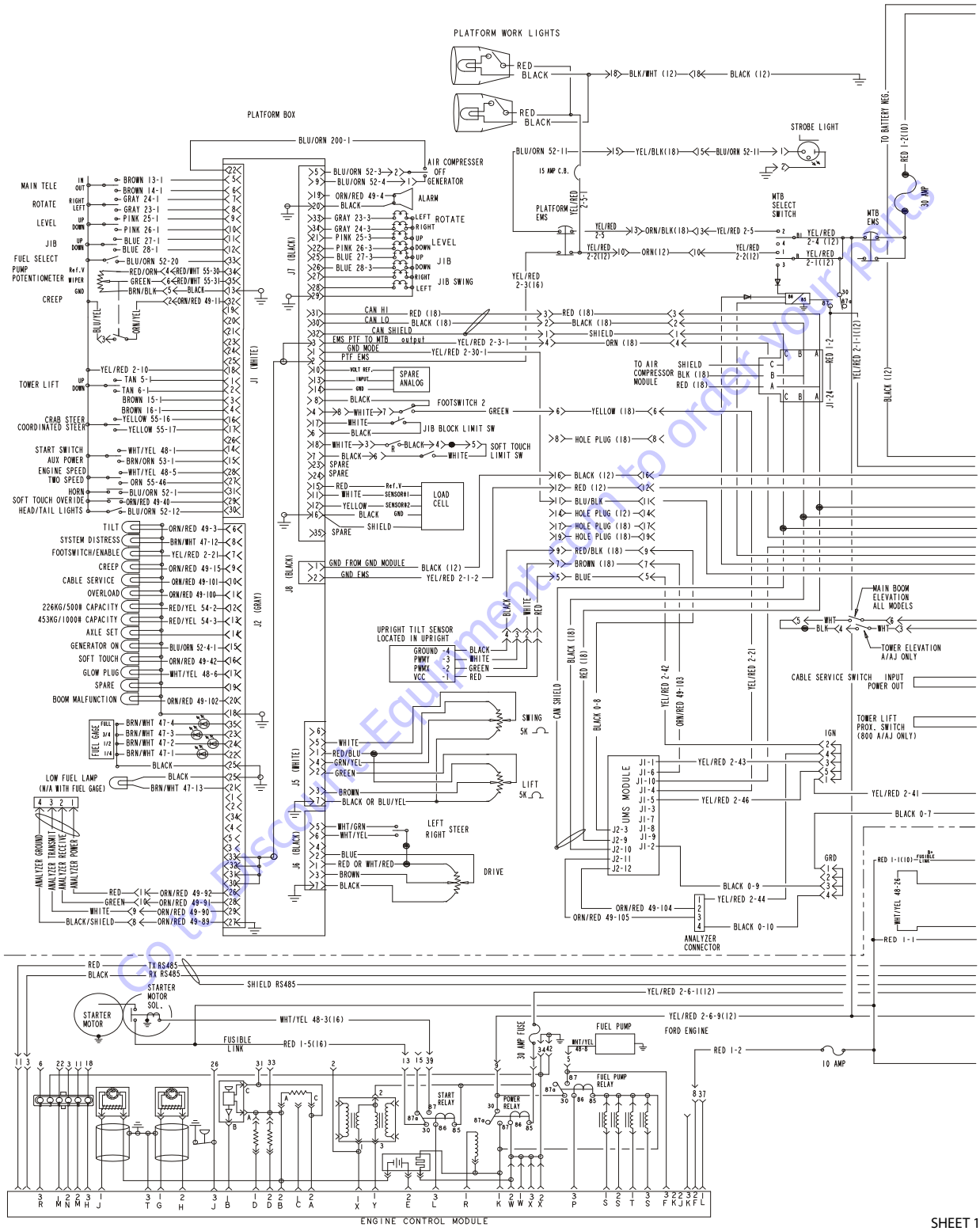

Figure 7-28. Electrical Schematic - Deutz & Ford Engines without UGM - Sheet 1 of 2

Go to Fisco Equipment to order your parts

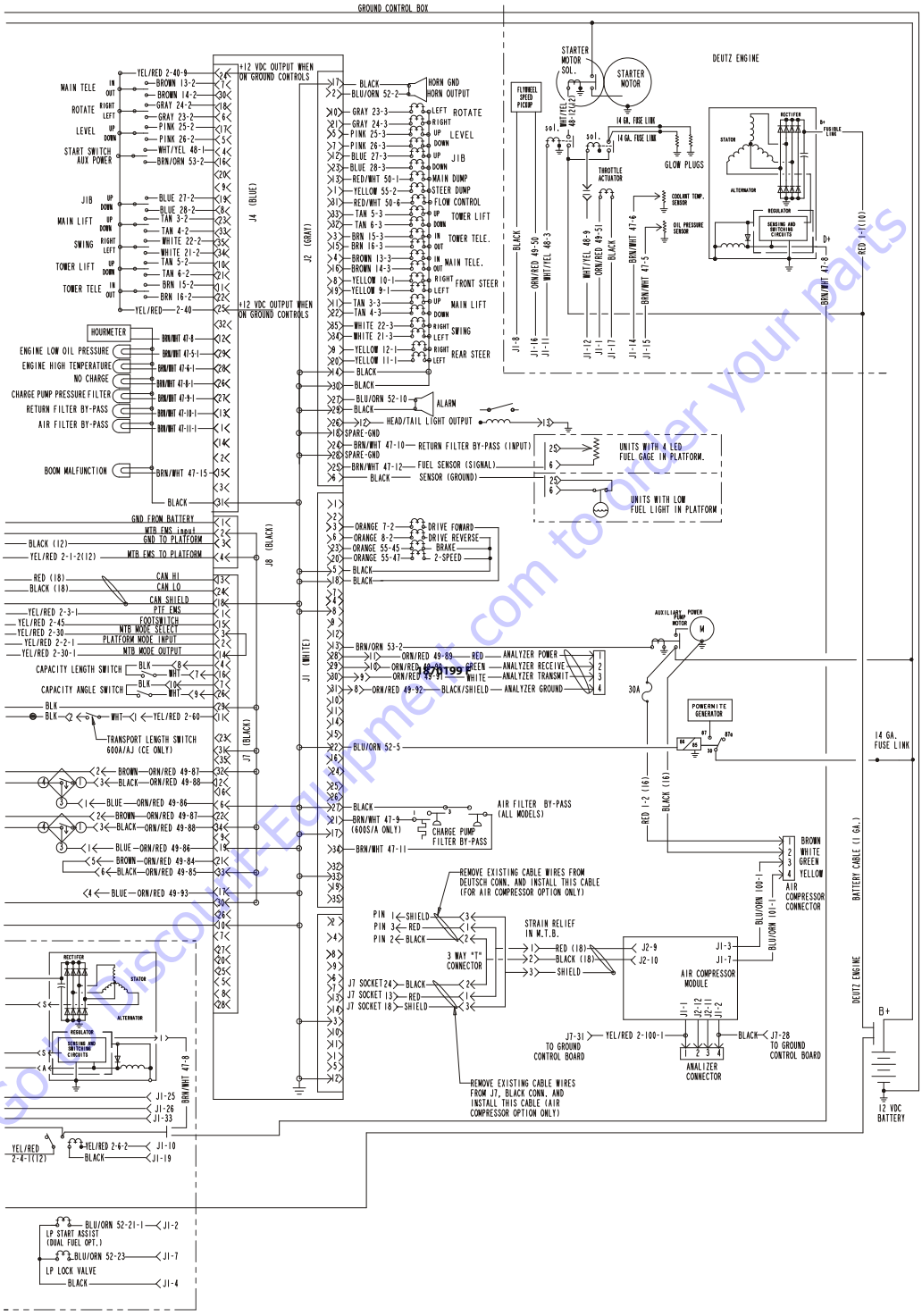

Go Discount Equipment .com to order your parts

Figure 7-29. Electrical Schematic - Deutz & Ford Engines without UGM - Sheet 2 of 2

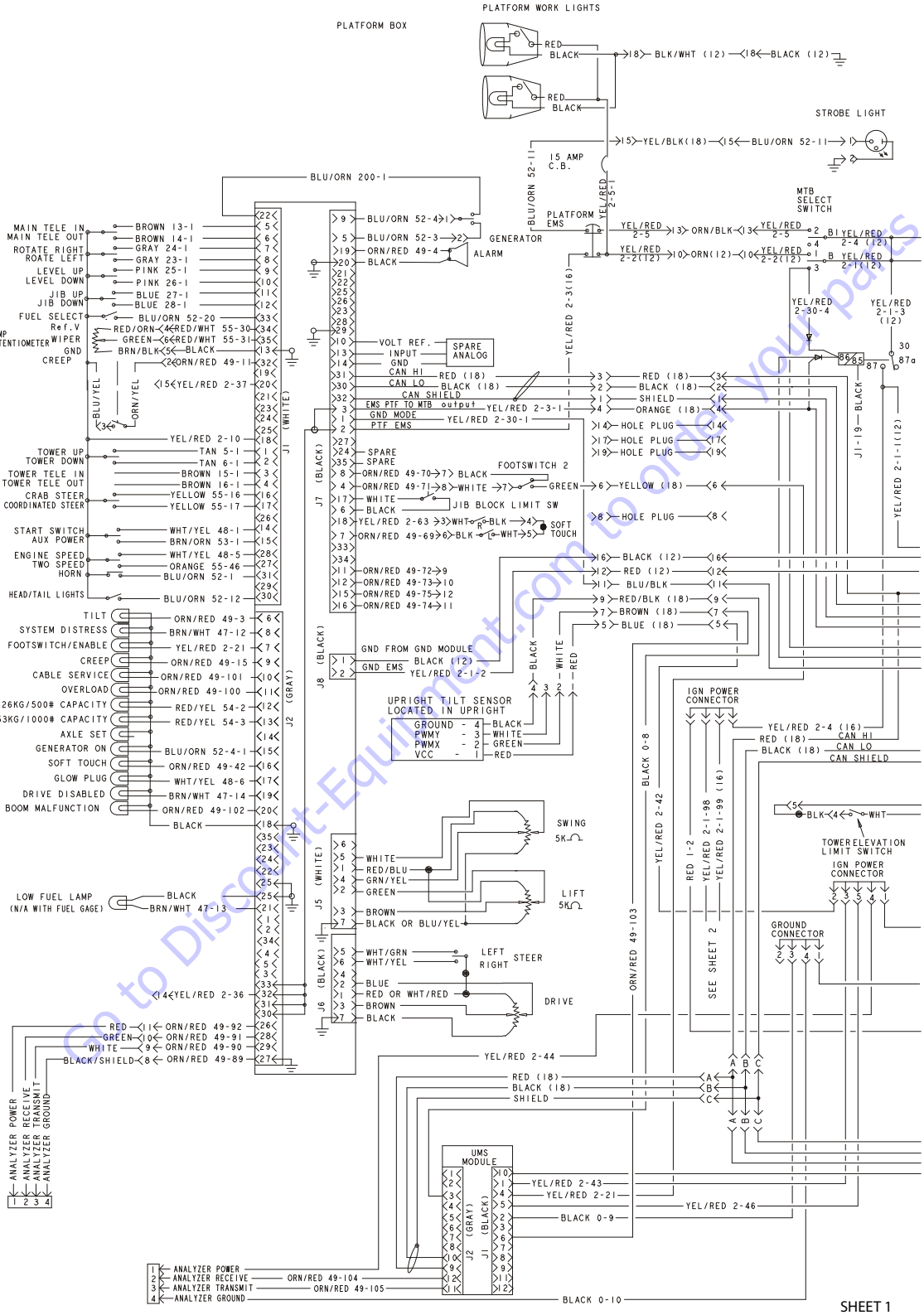

Figure 7-30. Electrical Schematic - Deutz EMR2 & GM Engines (Prior to SN 0300099884) - Sheet 1 of 6

Go to Discount-Equipment.com to order your parts

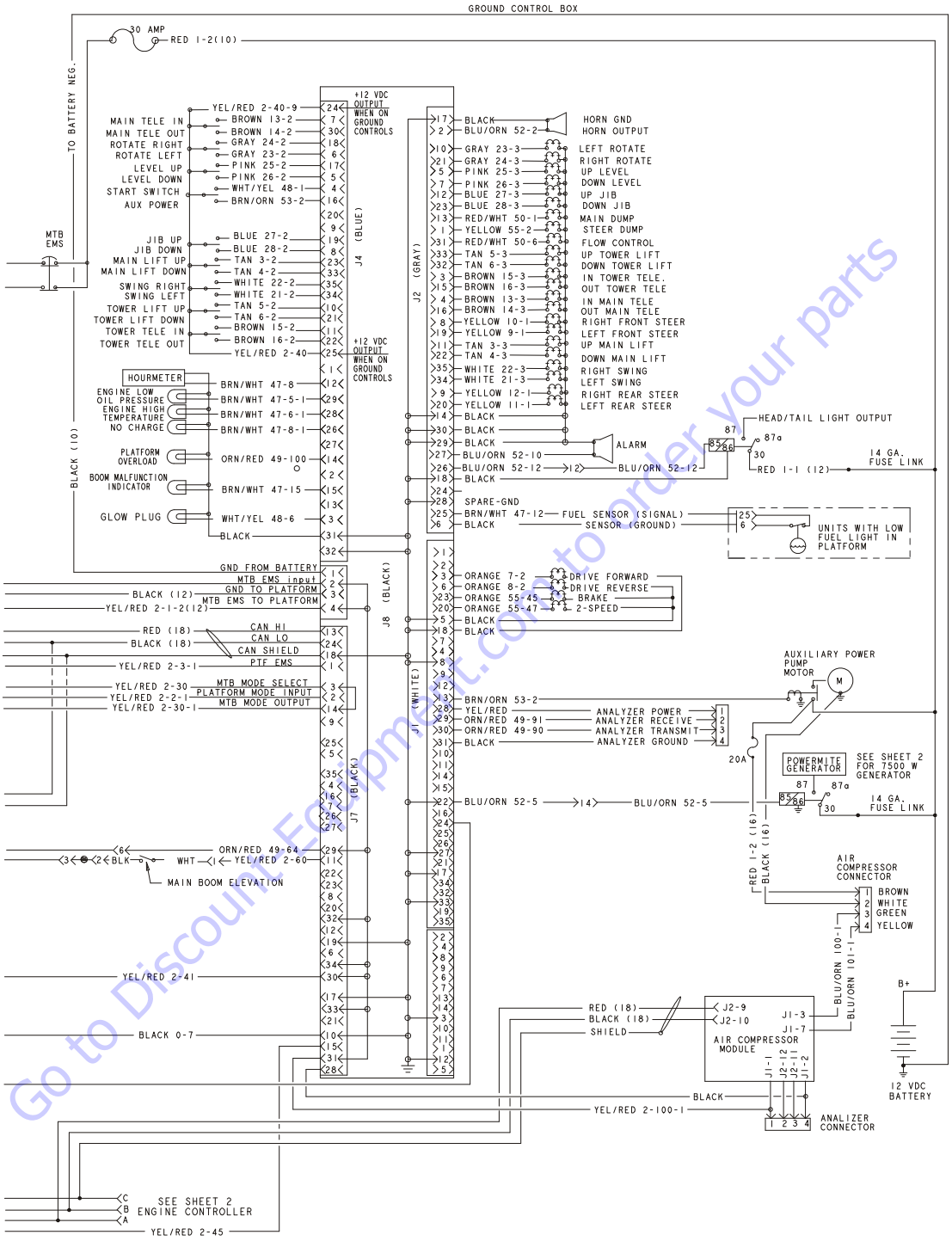

SHEET 1

1870199 F

Figure 7-31. Electrical Schematic - Deutz EMR2 & GM Engines (Prior to SN 0300099884) - Sheet 2 of 6

Go to Discount Equipment.com to order your parts

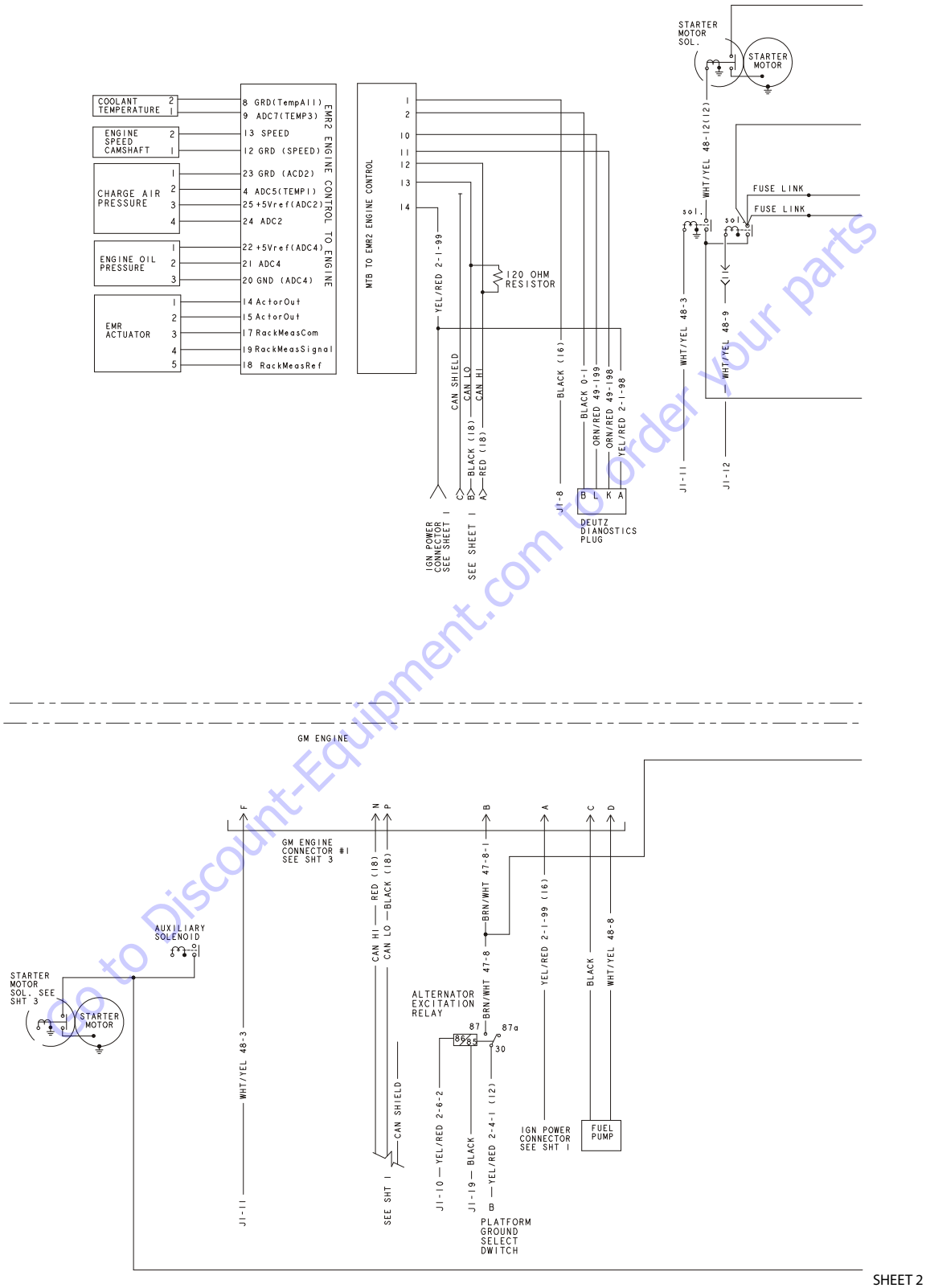

Go to Discount-Equipment.com to order your parts

Figure 7-32. Electrical Schematic - Deutz EMR2 & GM Engines (Prior to SN 0300099884) - Sheet 3 of 6

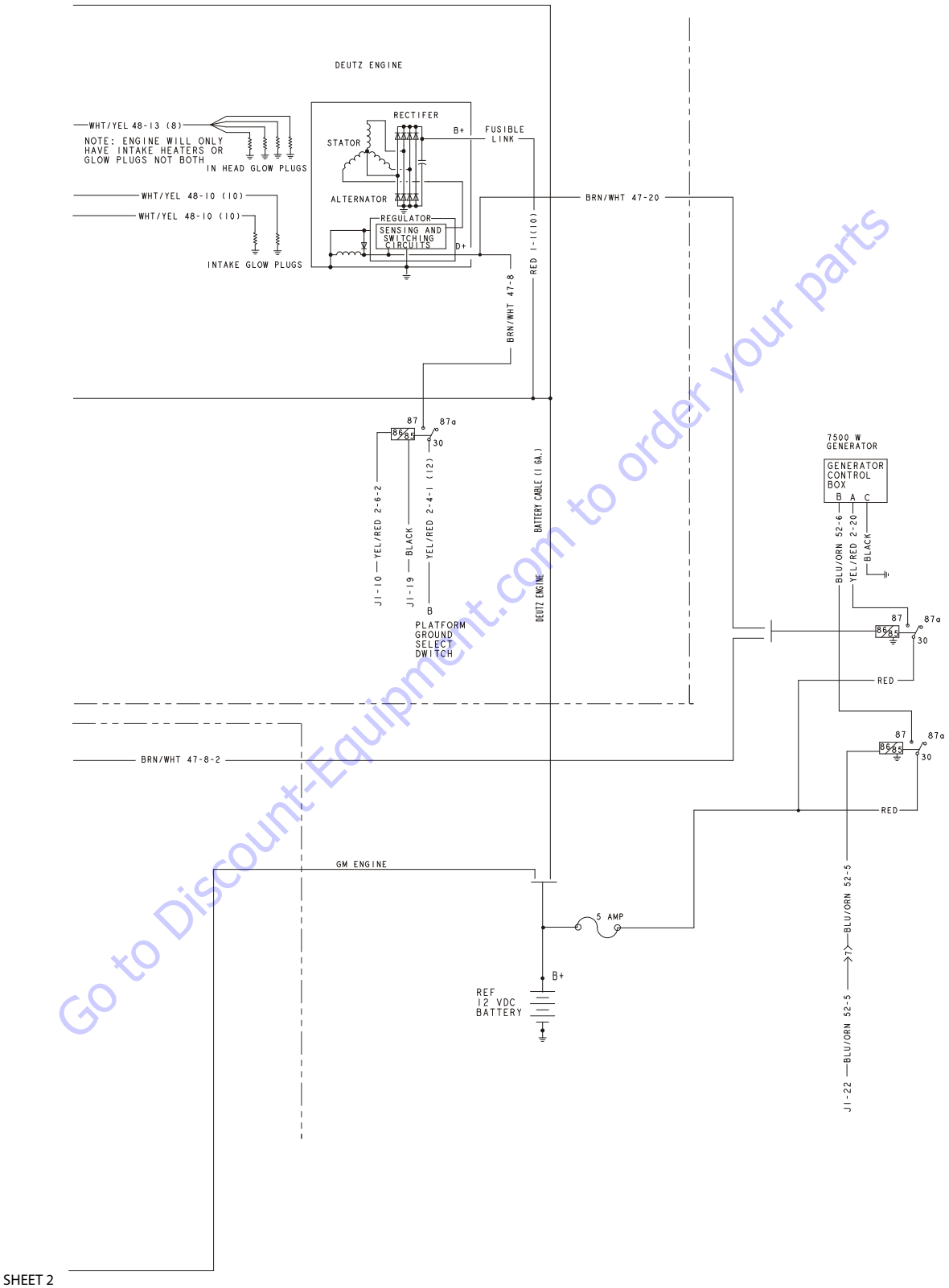

Go to Discount-Equipment.com to order your parts

Figure 7-33. Electrical Schematic - Deutz EMR2 & GM Engines (Prior to SN 0300099884) - Sheet 4 of 6

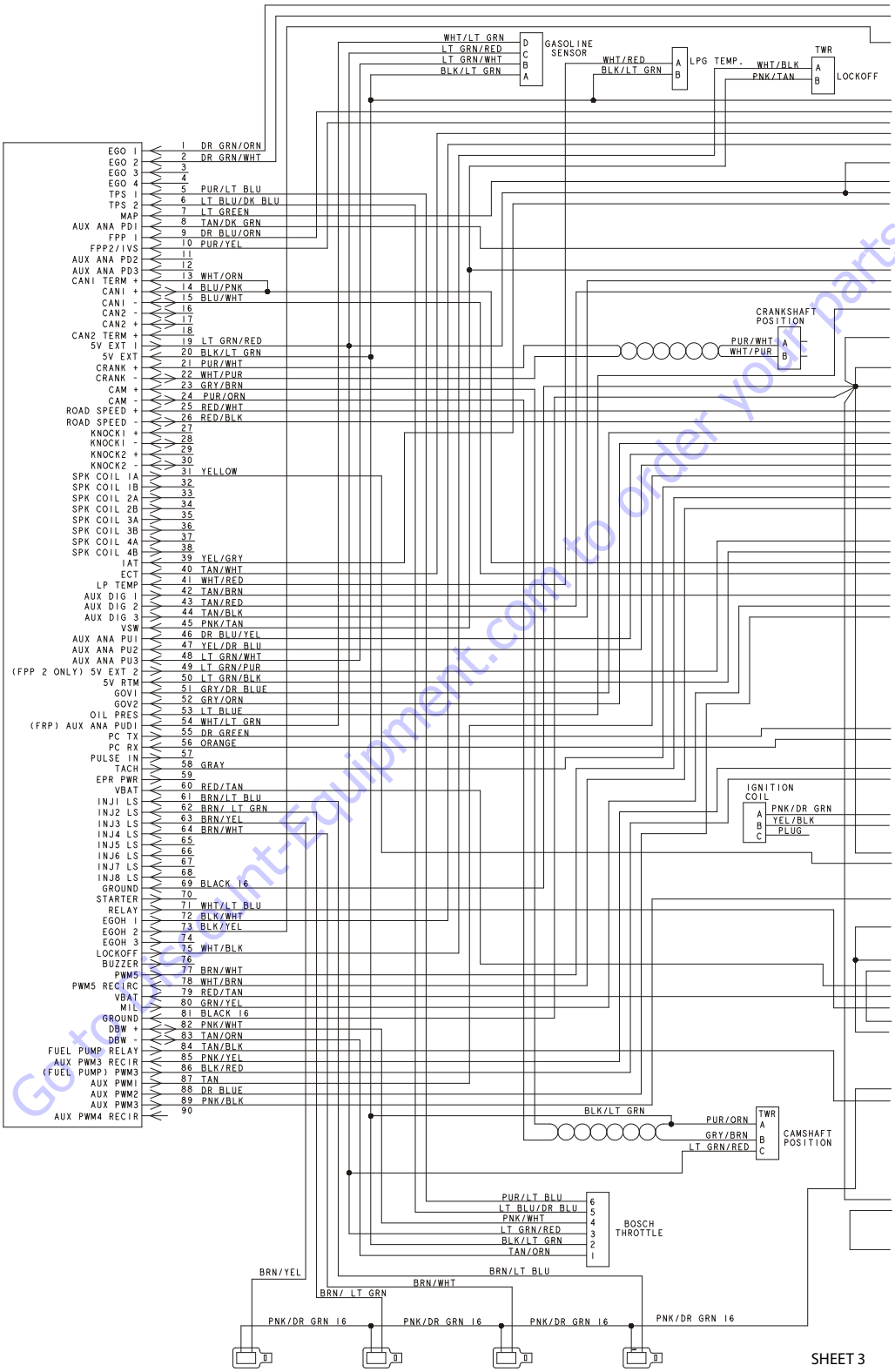

Go to Client-Equipment.com to order your parts

Figure 7-34. Electrical Schematic - Deutz EMR2 & GM Engines (Prior to SN 0300099884) - Sheet 5 of 6

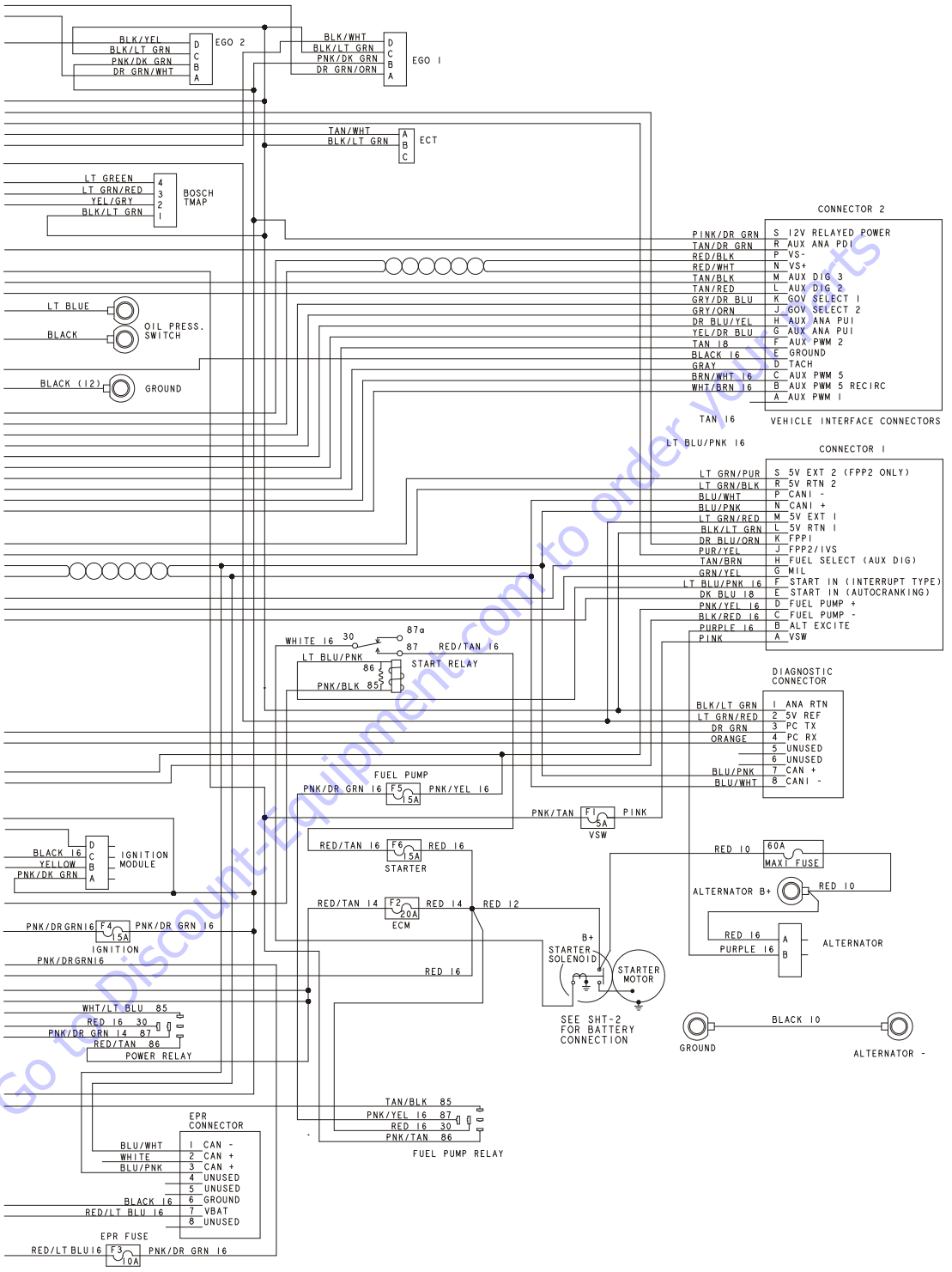

Go to Discount-Equipment.com to order your parts

Figure 7-35. Electrical Schematic - Deutz EMR2 & GM Engines (Prior to SN 0300099884) - Sheet 6 of 6

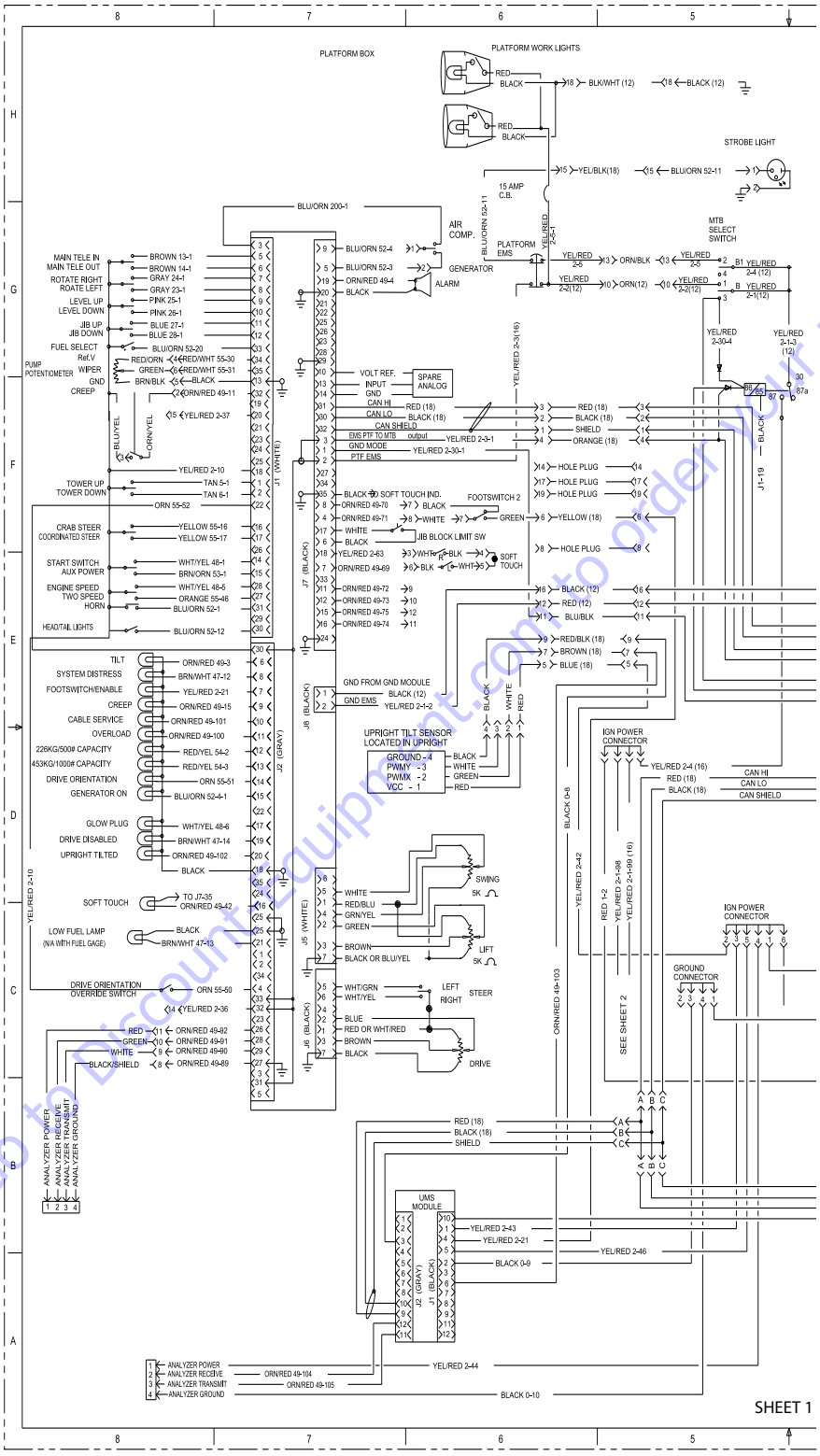

Figure 7-36. Electrical Schematic - Deutz EMR2 & GM Engines (SN 0300099884 through 0300185827) - Sheet 1 of 6

Go to DiscountEquipment.com to order your parts

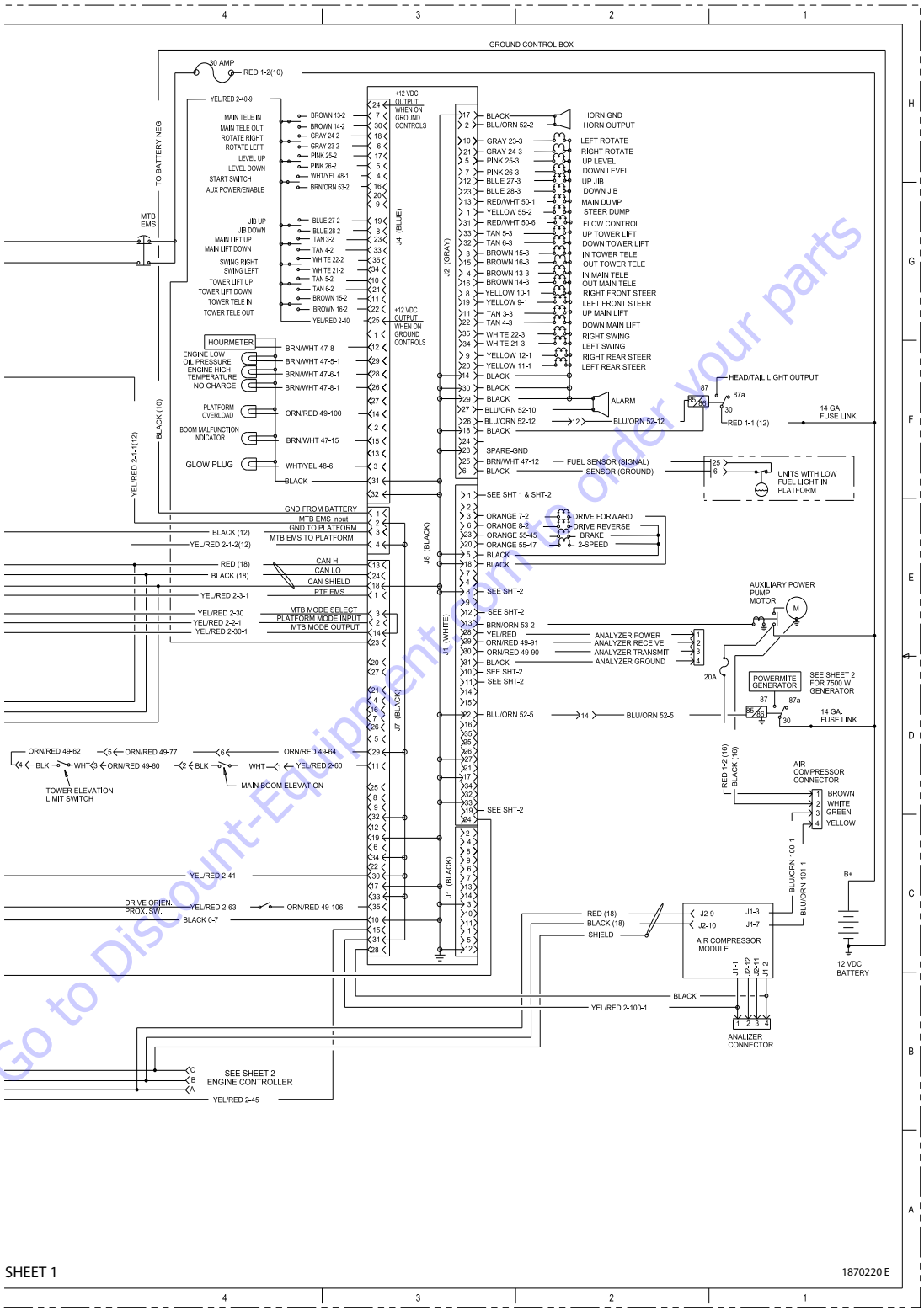

Go to Discount-Equipment.com to order your parts

Figure 7-37. Electrical Schematic - Deutz EMR2 & GM Engines (SN 0300099884 through 0300185827) - Sheet 2 of 6

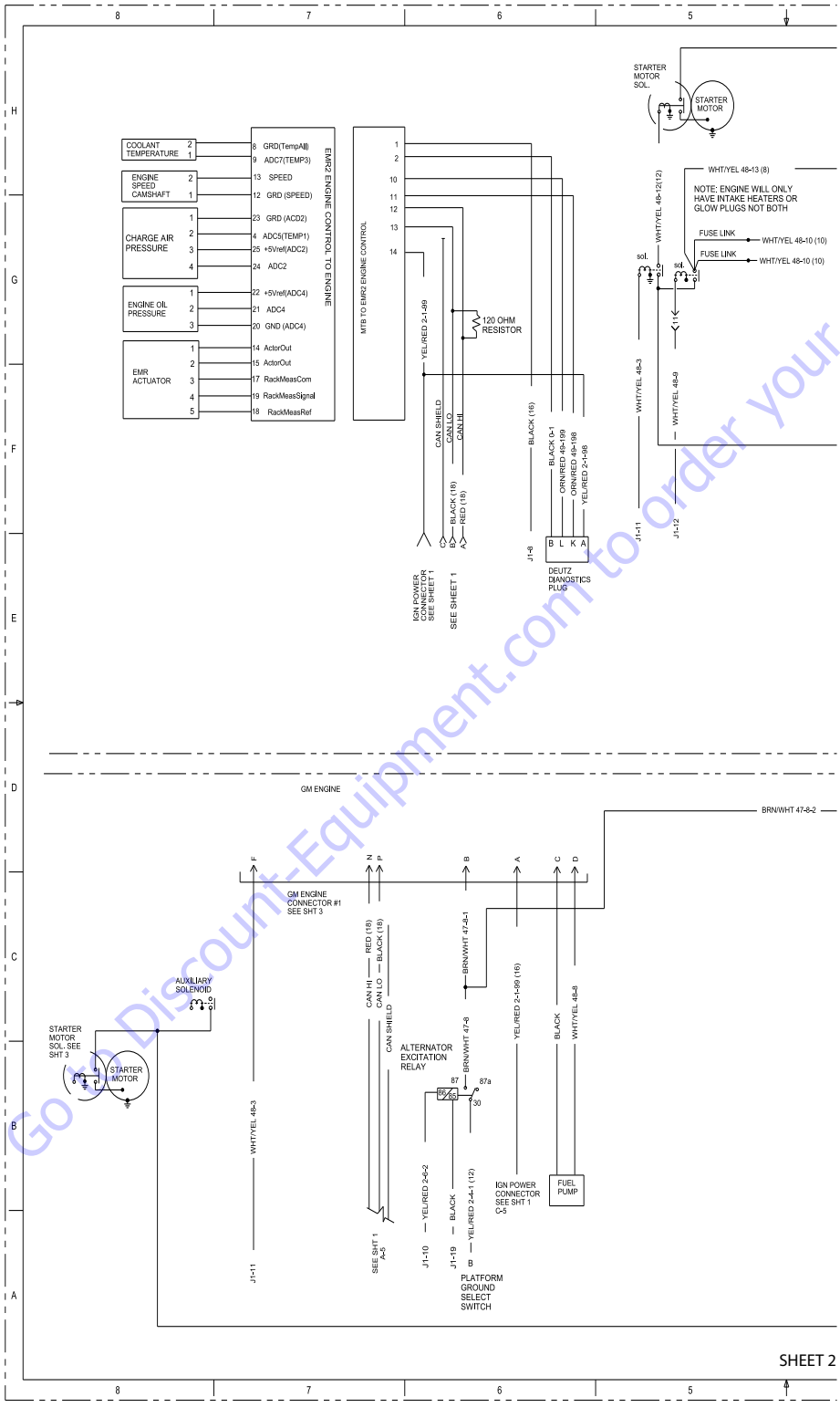

Go to Discount-Equipment.com to order your parts

Figure 7-38. Electrical Schematic - Deutz EMR2 & GM Engines (SN 0300099884 through 0300185827) - Sheet 3 of 6

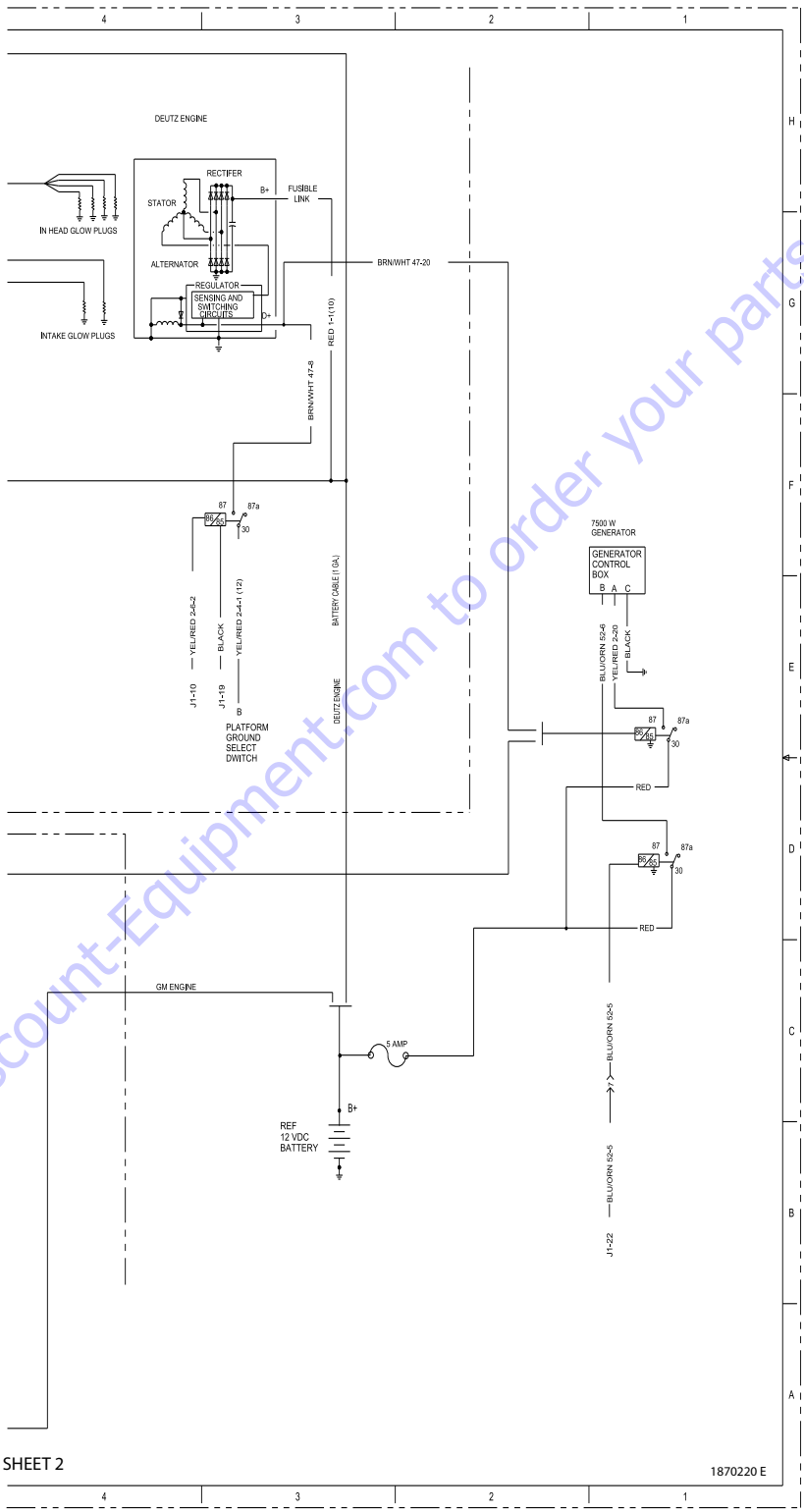

Go to Discount-Equipment.com to order your parts

Figure 7-39. Electrical Schematic - Deutz EMR2 & GM Engines (SN 0300099884 through 0300185827) - Sheet 4 of 6

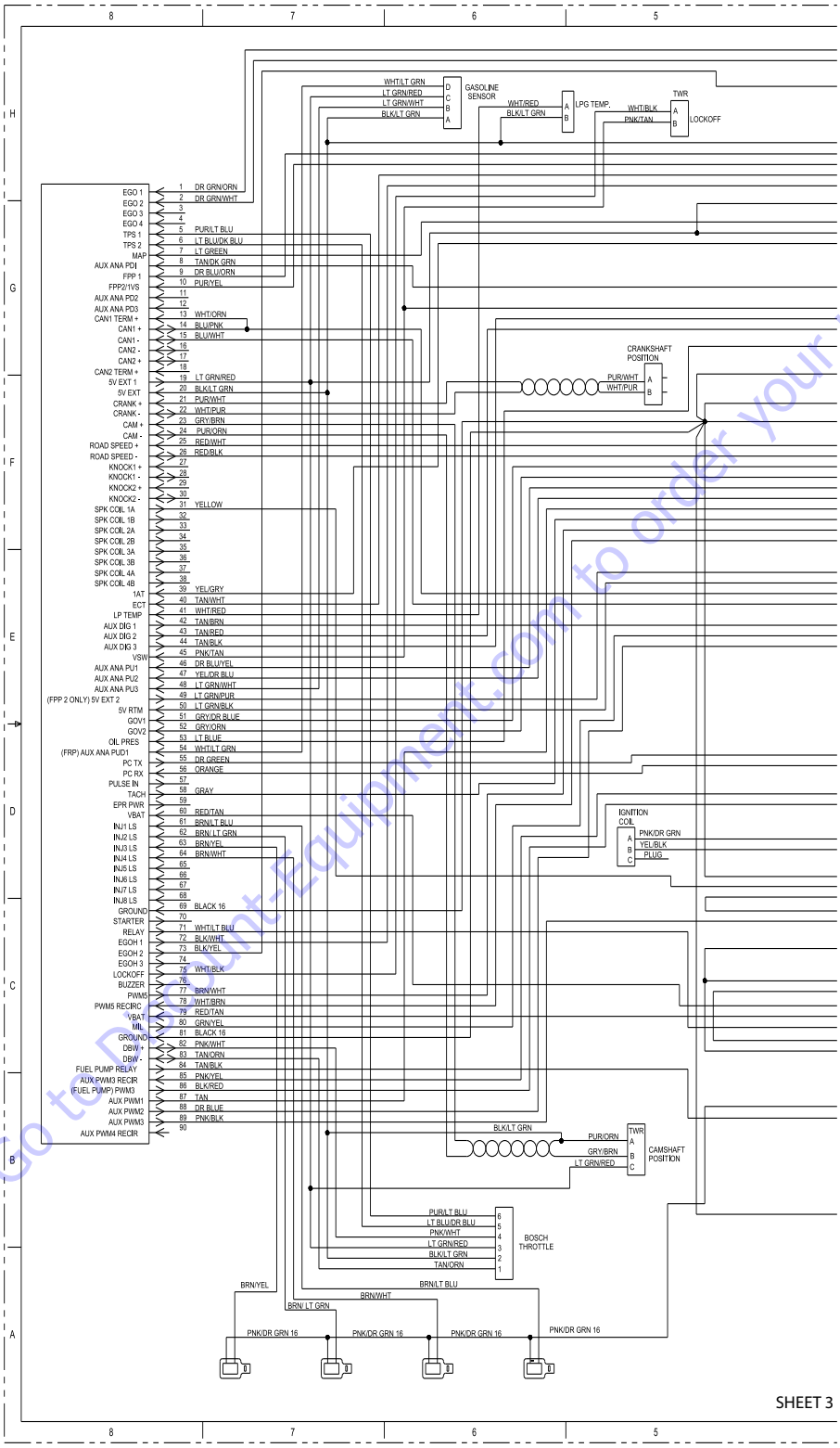

Go to Discount-Equipment.com to order your parts

Figure 7-40. Electrical Schematic - Deutz EMR2 & GM Engines (SN 0300099884 through 0300185827) - Sheet 5 of 6

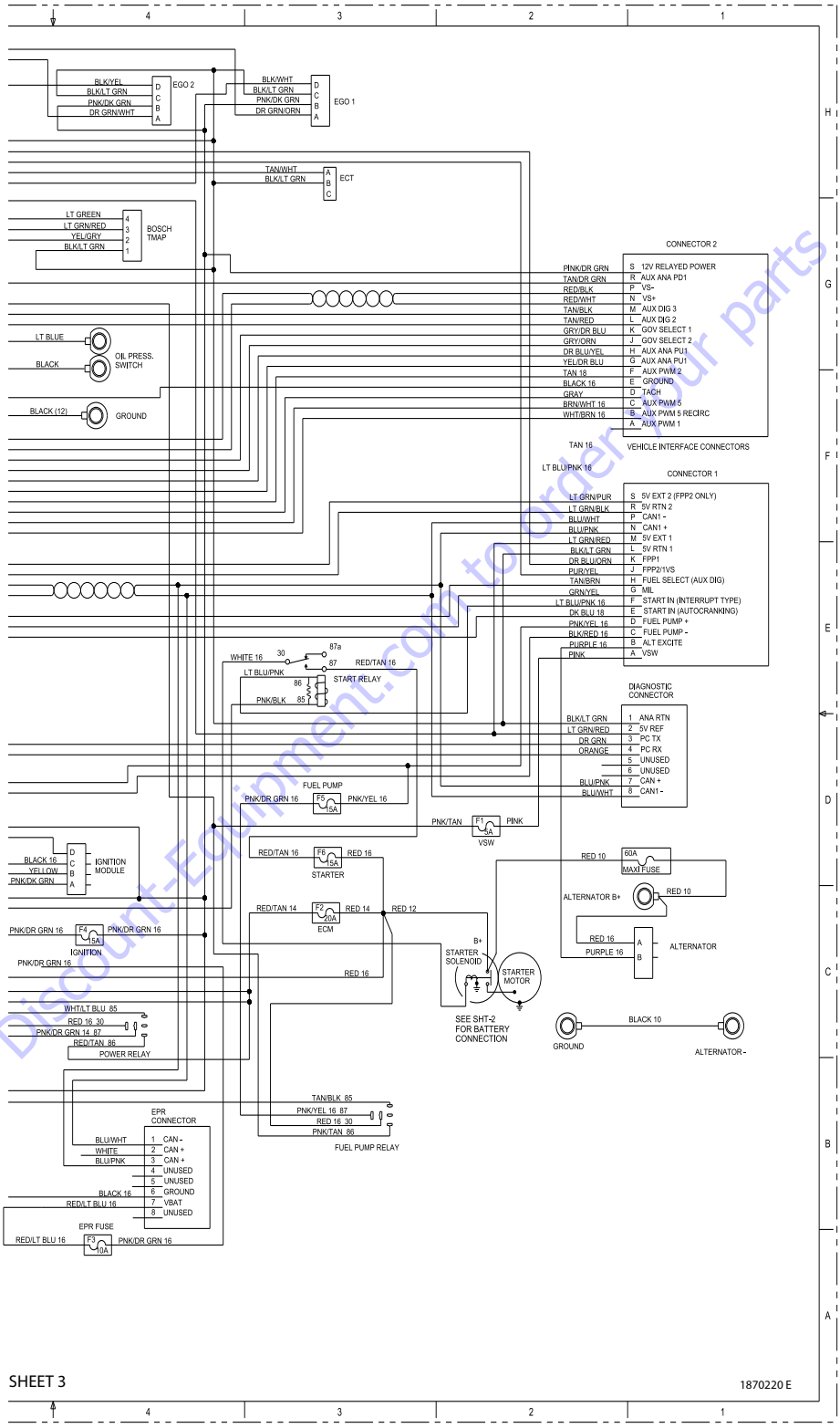

Go to Discount-Equipment.com to Order Our parts

Figure 7-41. Electrical Schematic - Deutz EMR2 & GM Engines (SN 0300099884 through 0300185827) - Sheet 6 of 6

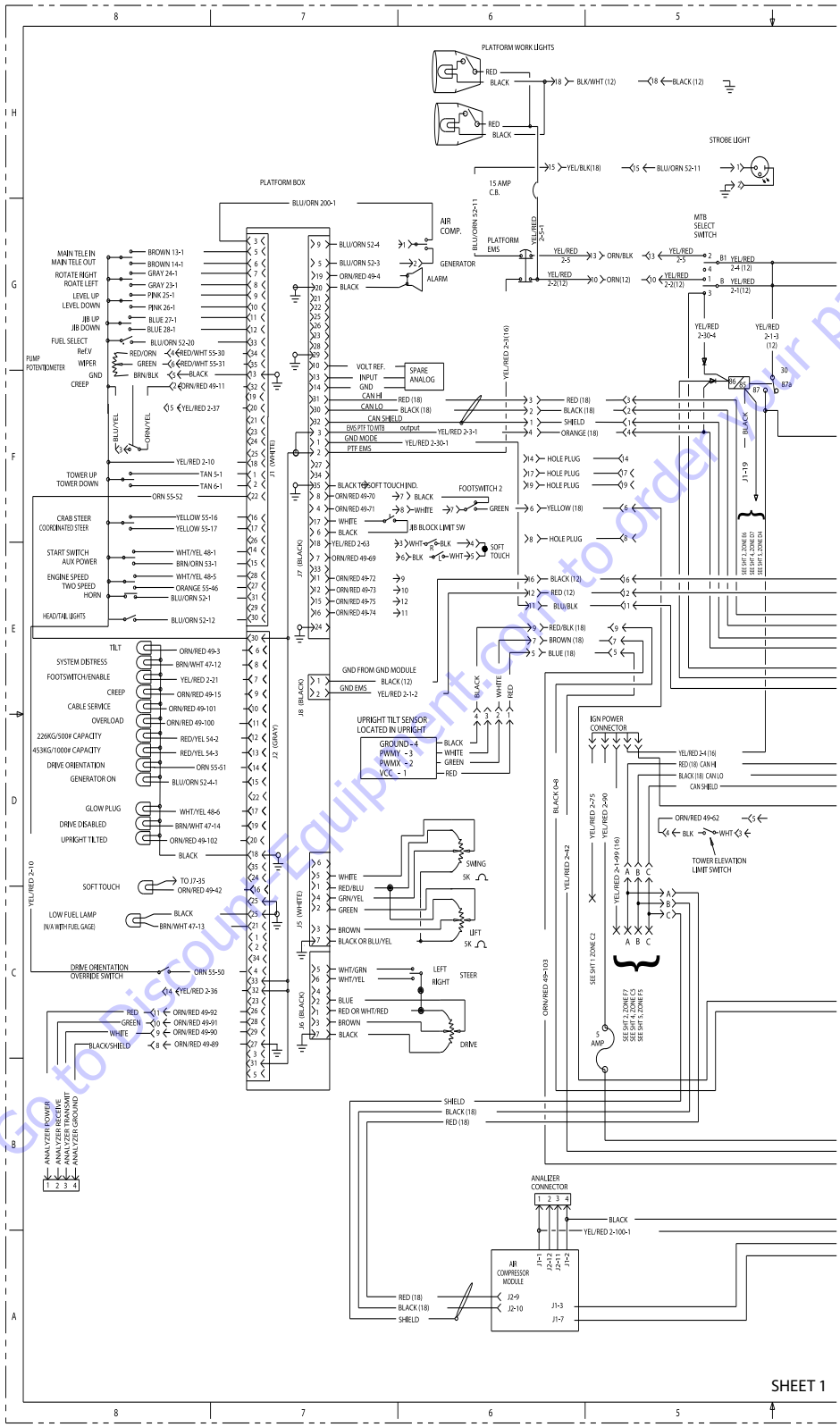

Go to Discount-Equipment.com to order your parts

Figure 7-42. Deutz and GM Engines with UGM - Sheet 1 of 10

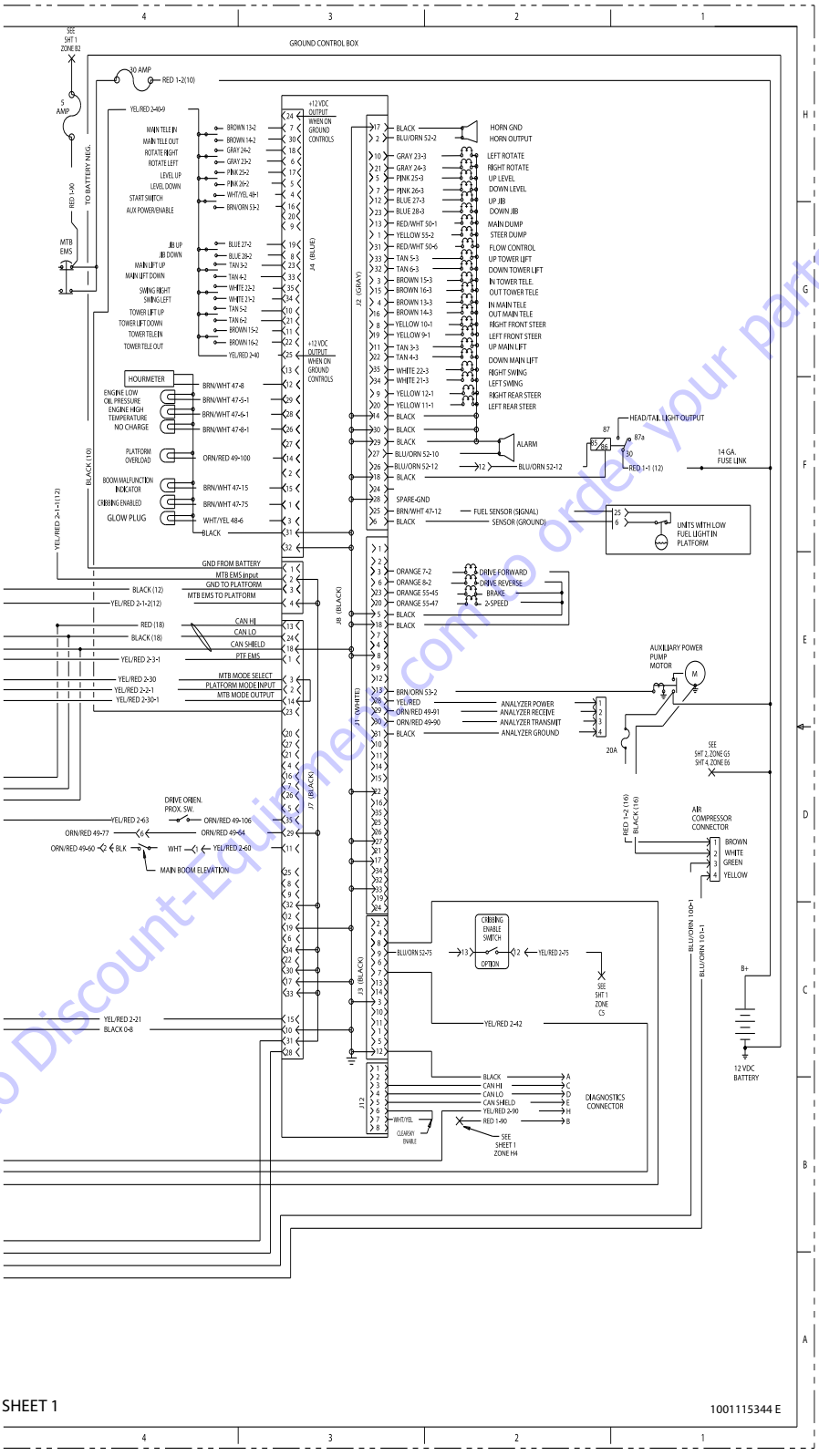

Go to Discount-Equipment.com to order your parts

Figure 7-43. Deutz and GM Engines with UGM - Sheet 2 of 10

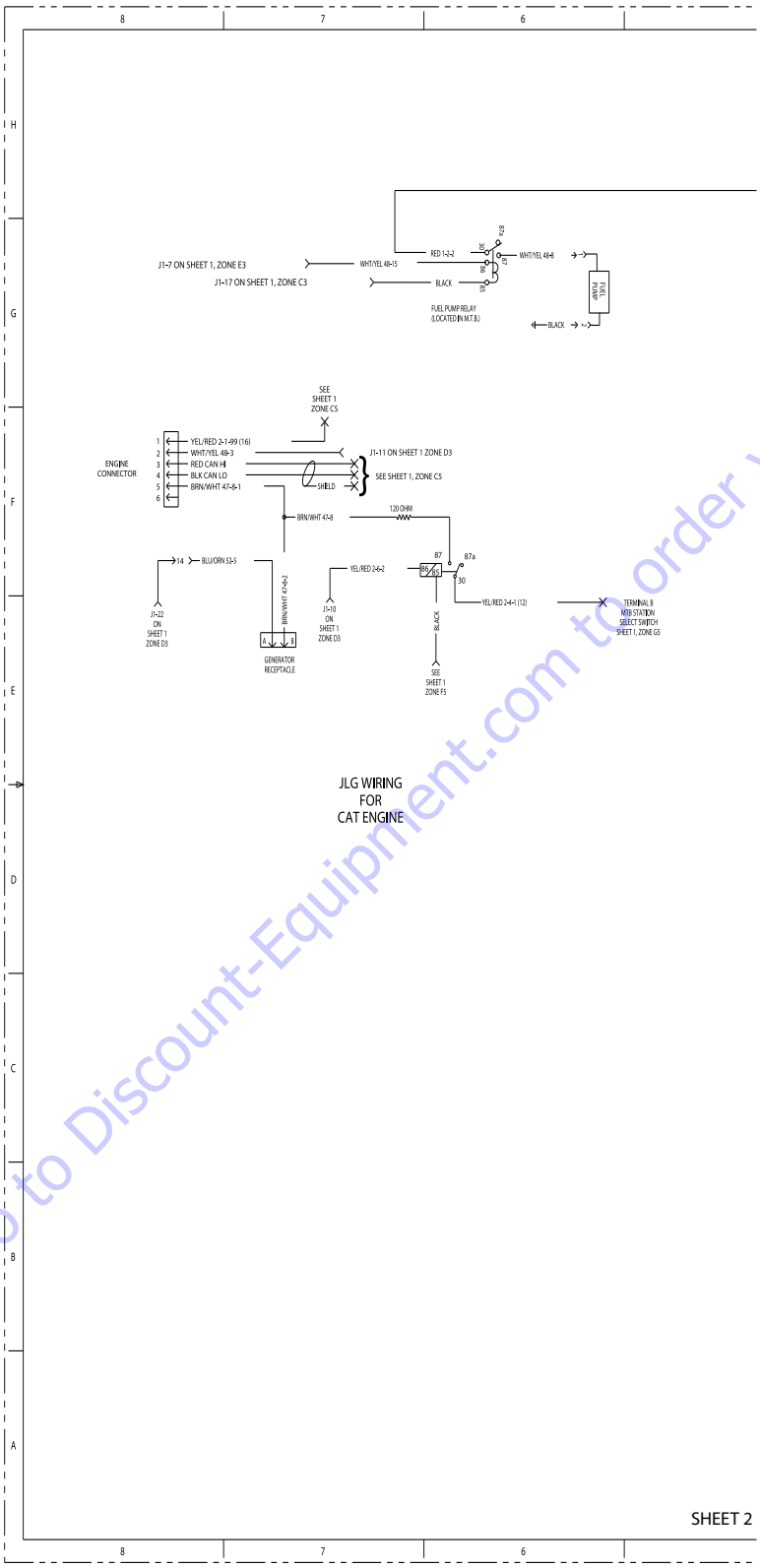

Go to Discount-Equipment.com to order your parts

Figure 7-44. Deutz and GM Engines with UGM - Sheet 3 of 10

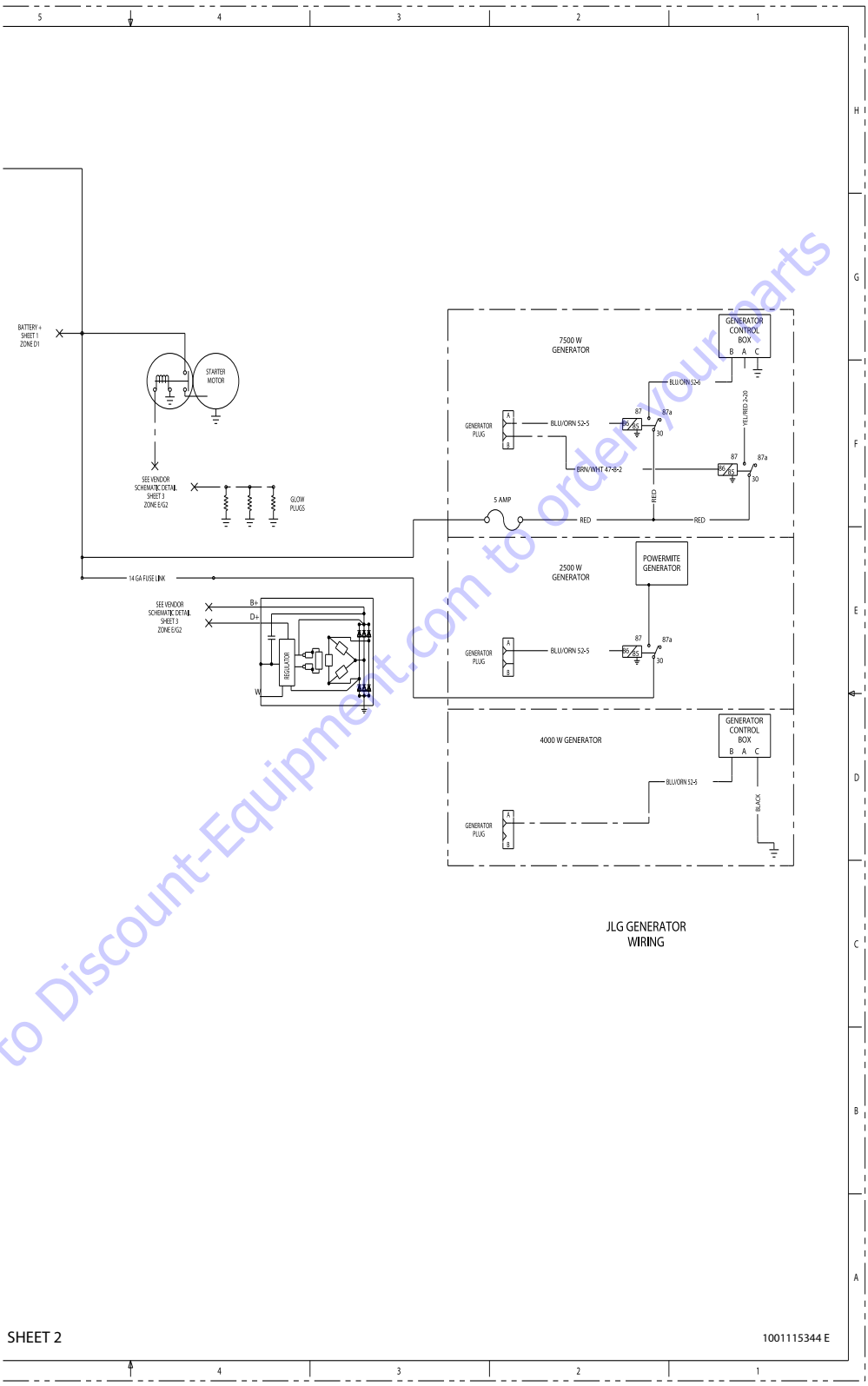

Go to Discount-Equipment.com to order your parts

Figure 7-45. Deutz and GM Engines with UGM - Sheet 4 of 10

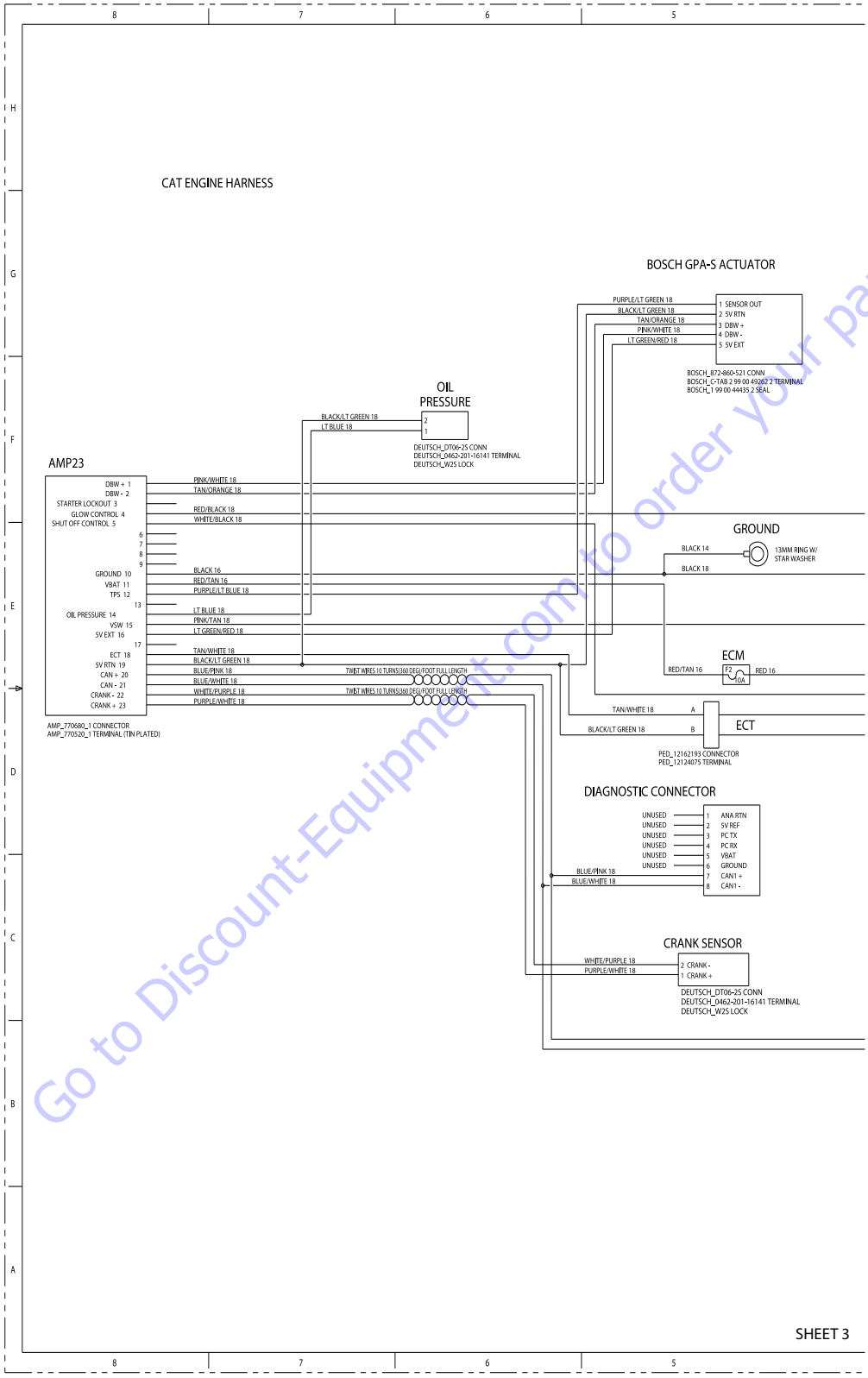

Go to Discount-Equipment.com to order your parts

Figure 7-46. Deutz and GM Engines with UGM - Sheet 5 of 10

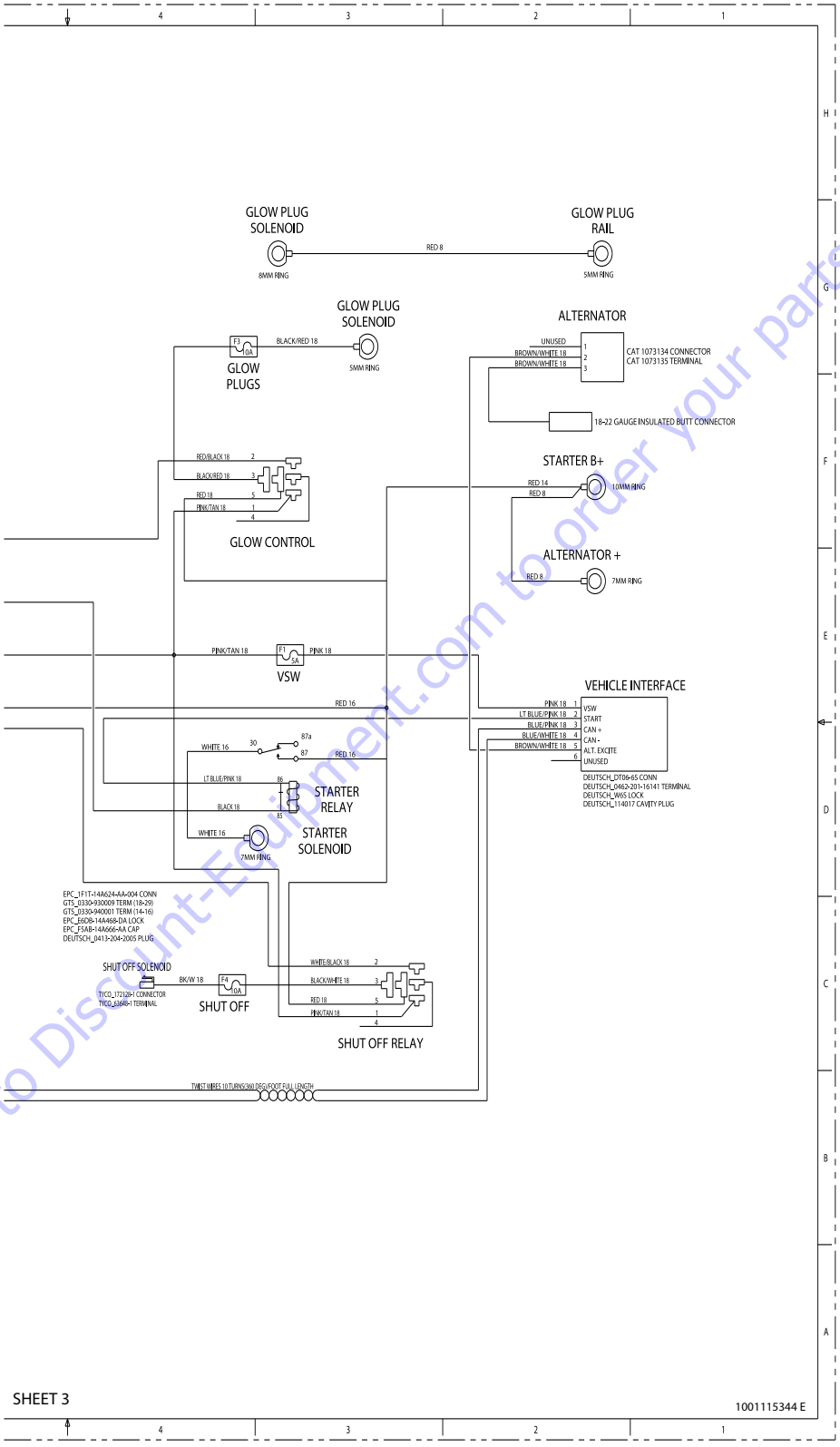

Go to Discount-Equipment.com to order your parts

Figure 7-47. Deutz and GM Engines with UGM - Sheet 6 of 10

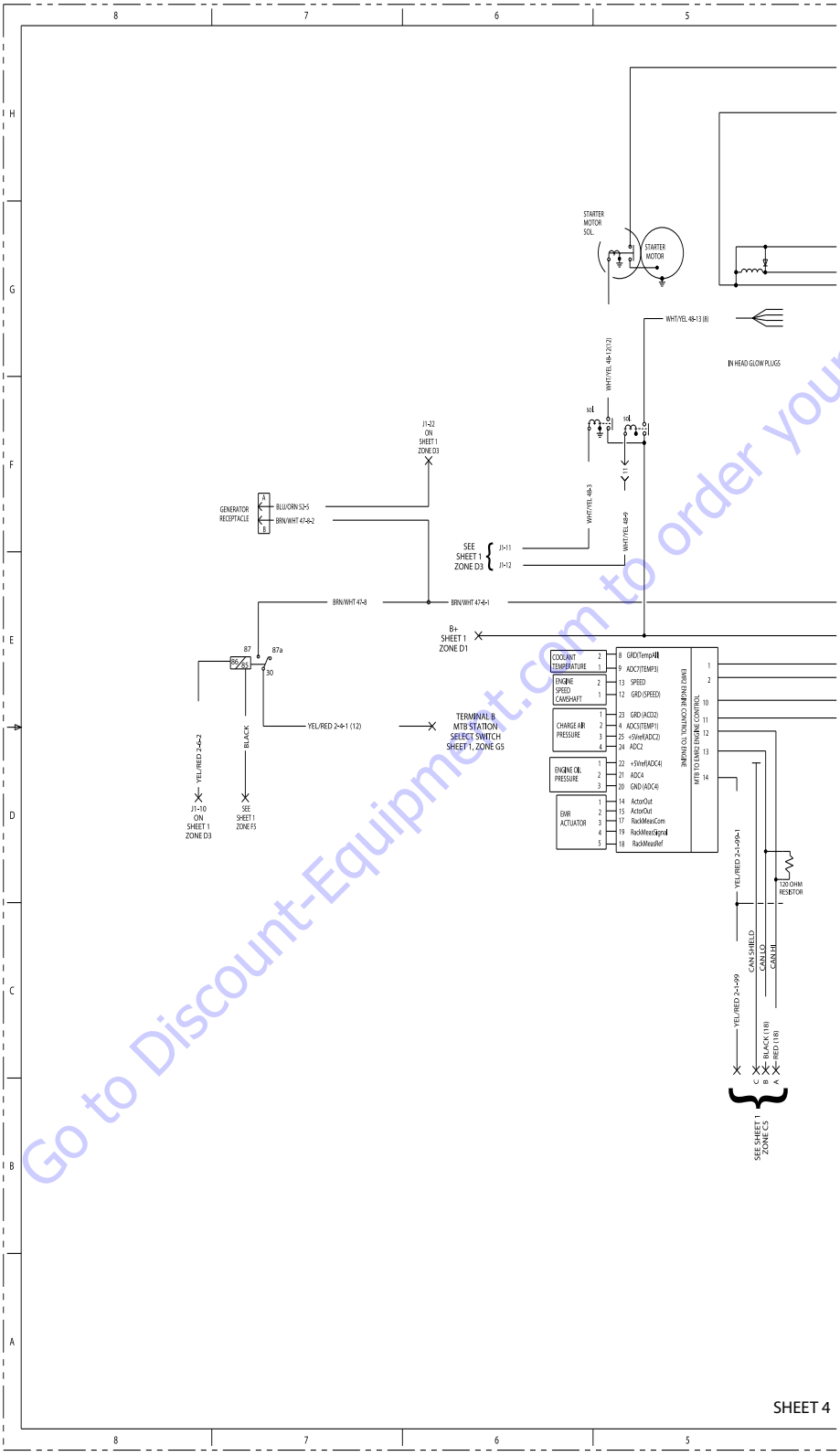

Go to Discount-Equipment.com to order your parts

Figure 7-48. Deutz and GM Engines with UGM - Sheet 7 of 10

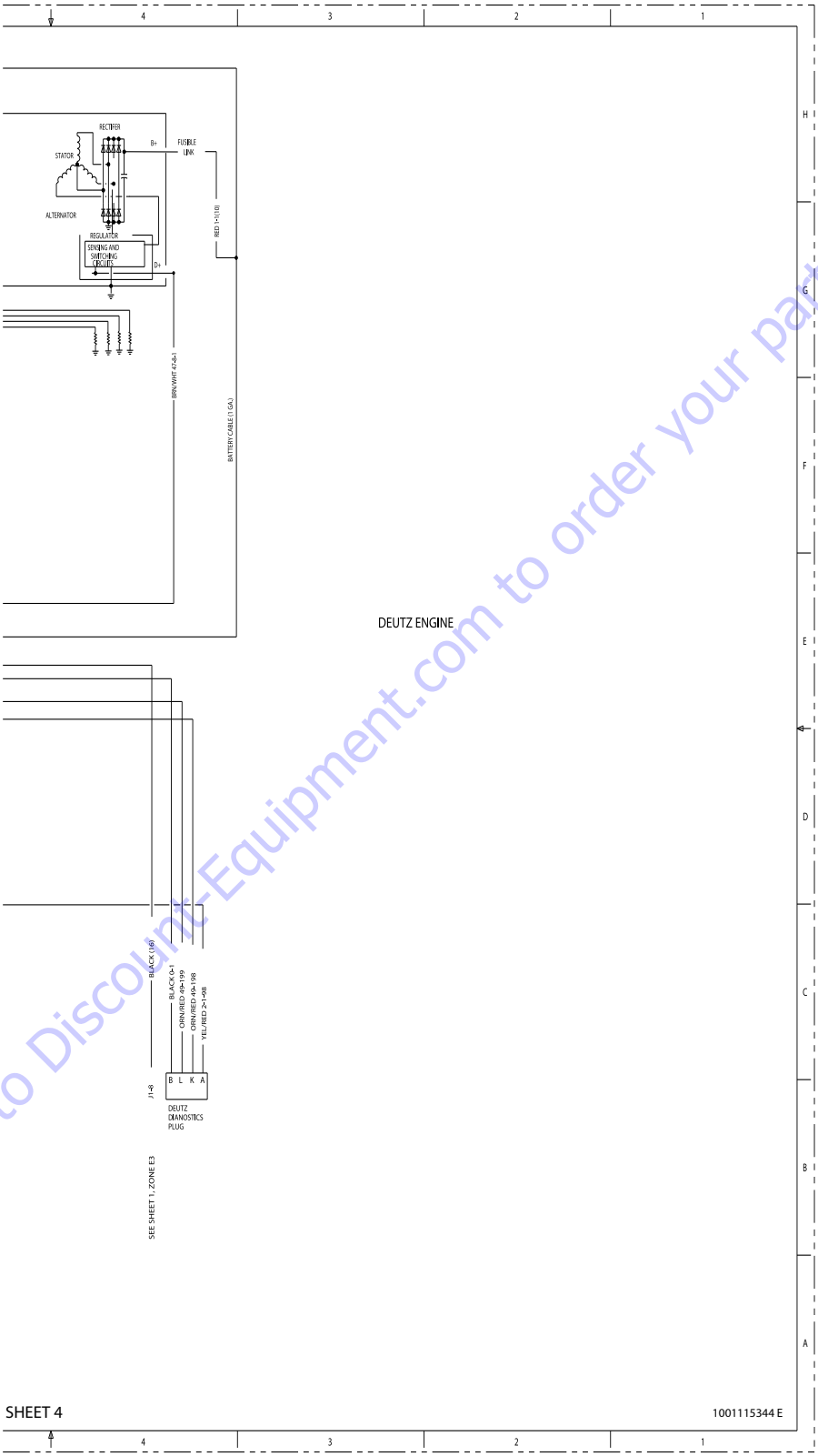

Go to Discount-Equipment.com to order your parts

Figure 7-49. Deutz and GM Engines with UGM - Sheet 8 of 10

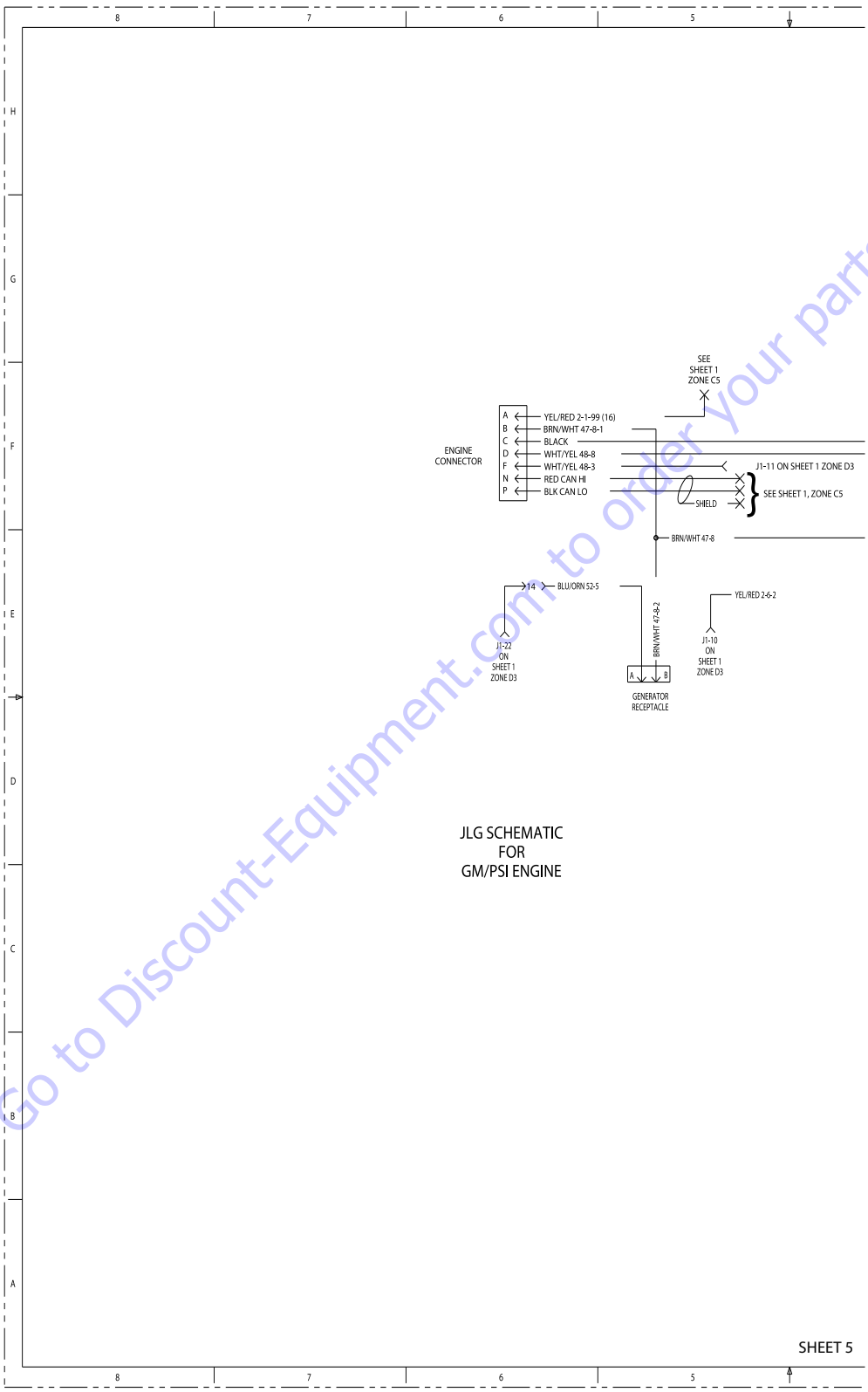

Go to Discount-Equipment.com to order your parts

Figure 7-50. Deutz and GM Engines with UGM - Sheet 9 of 10

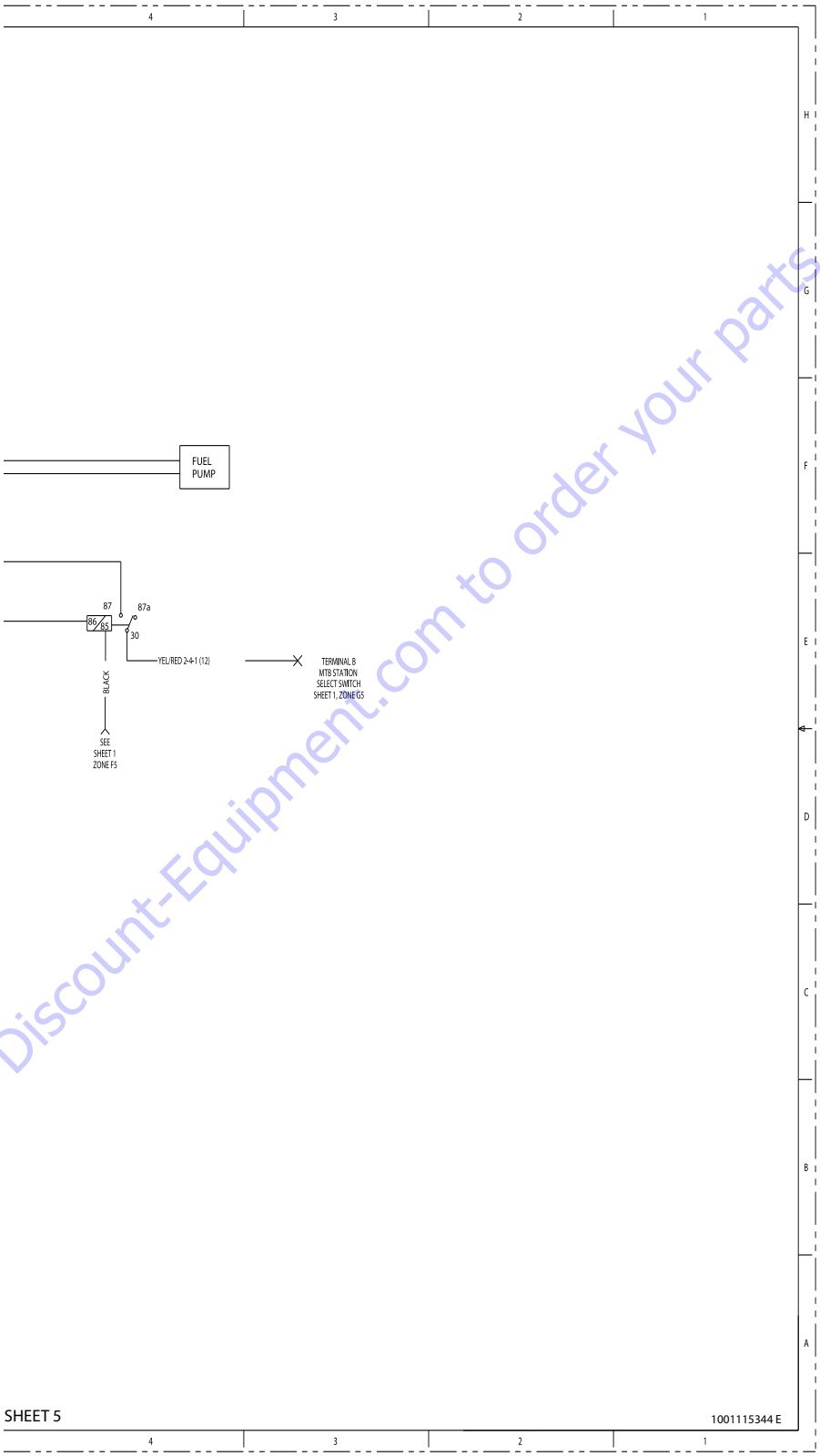

Go to Discount-Equipment.com to order your parts

Figure 7-51. Deutz and GM Engines with UGM - Sheet 10 of 10

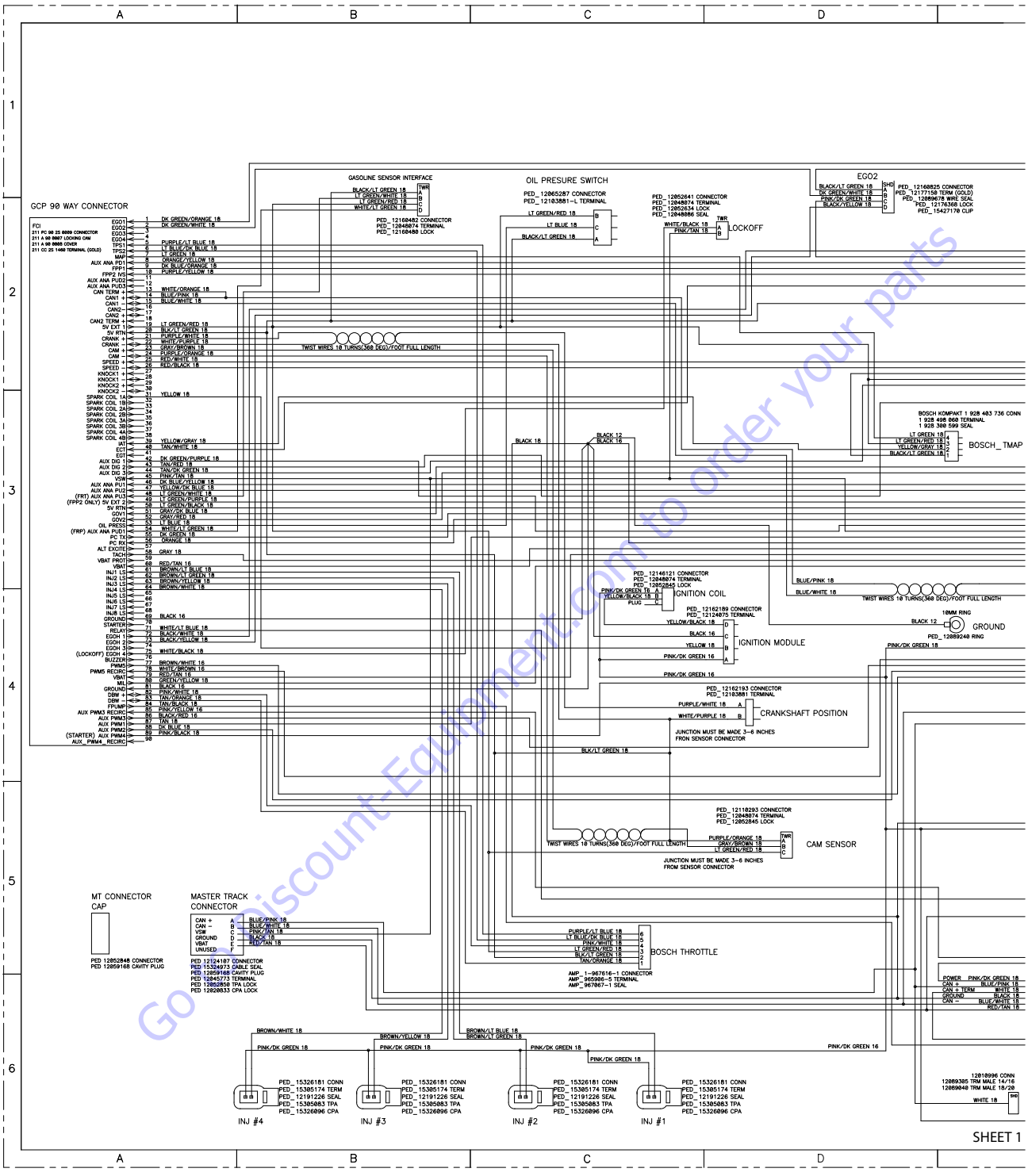

Figure 7-52. GM Engine Schematic (Engine Schematic Only) - Sheet 1 of 2

Go Discount-Equipment.com to order your parts

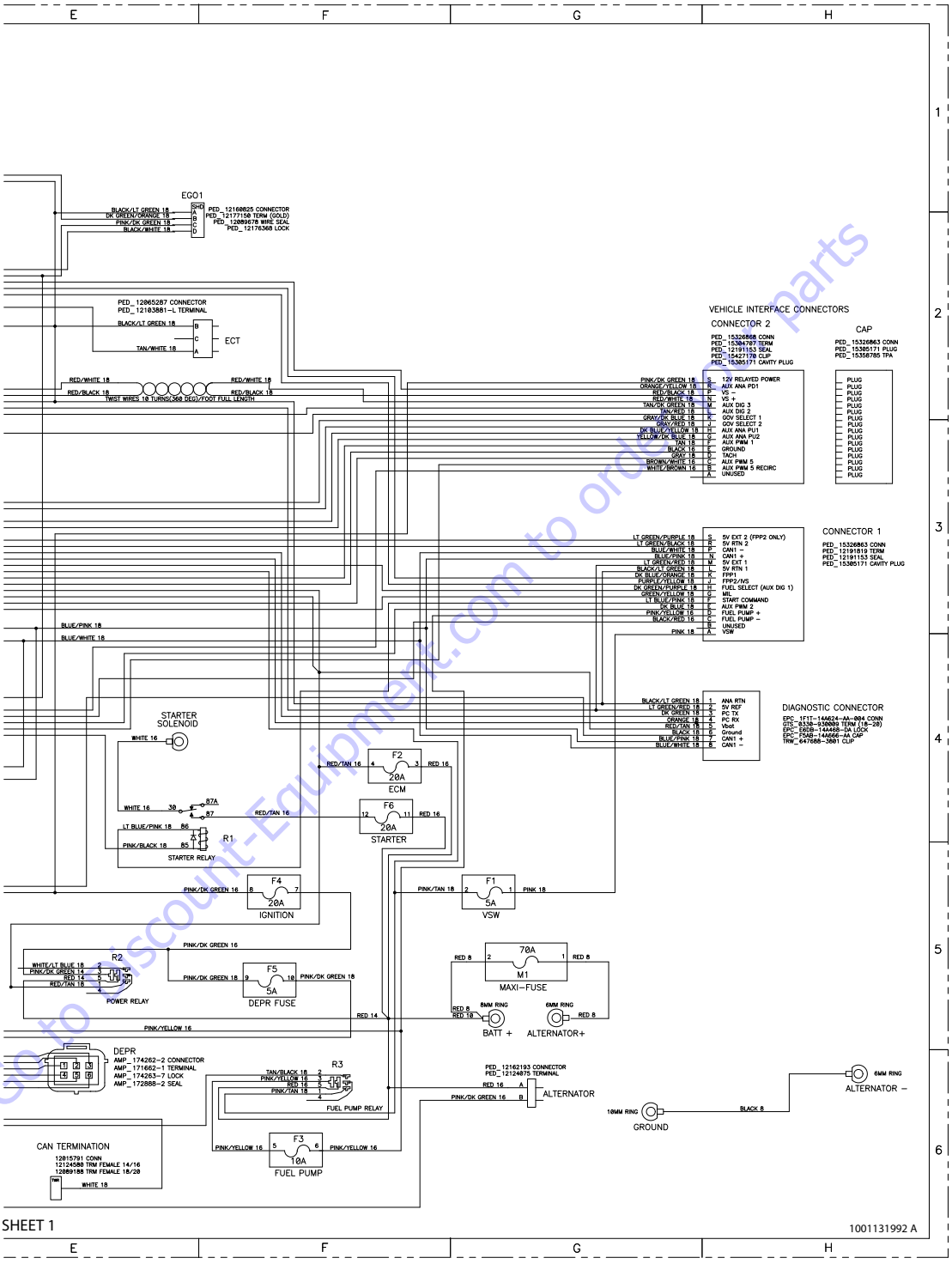

Go to Discount-Equipment.com to order parts

Figure 7-53. GM Engine Schematic (Engine Schematic Only) - Sheet 2 of 2

PROPOSITION 65 WARNING

- **Battery posts, terminals and related accessories contain lead and lead compounds, chemicals known to the State of California to cause cancer and reproductive harm.**
- **Batteries also contain other chemicals known to the State of California to cause cancer.**
- **Wash hands after handling.**

Go to Discount-Equipment.com to order your parts

⚠ WARNING: ⚠

The engine exhaust from this product contains chemicals known to the State of California to cause cancer, birth defects, or other reproductive harm.

1702961

3121160

An Oshkosh Corporation Company

Discount Equipment

www.Discount-Equipment.com

Go to Discount-Equipment.com to order your parts

PARTS FINDER

Search Website by Part Number

Discount Equipment

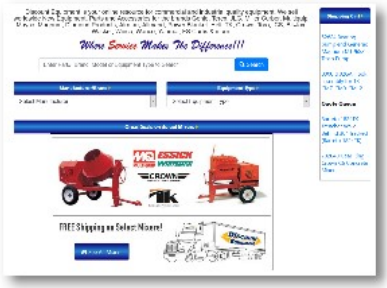

Search Manual Library For Parts Manual & Lookup Part Numbers – Purchase or Request Quote

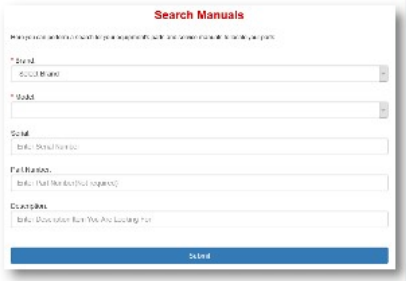

Can't Find Part or Manual? Request Help by Manufacturer, Model & Description

Discount-Equipment.com is your online resource for quality parts & equipment.
Florida: 561-964-4949 Outside Florida TOLL FREE: 877-690-3101

Go to Discount-Equipment.com to order your parts

Need parts?

Click on this link: http://www.discount-equipment.com/category/5443-parts/ and choose one of the options to help get the right parts and equipment you are looking for. Please have the machine model and serial number available in order to help us get you the correct parts. If you don't find the part on the website or on once of the online manuals, please fill out the request form and one of our experienced staff members will get back to you with a quote for the right part that your machine needs.

We sell worldwide for the brands: Genie, Terex, JLG, MultiQuip, Mikasa, Essick, Whiteman, Mayco, Toro Stone, Diamond Products, Generac Magnum, Airman, Haulotte, Barreto, Power Blanket, Nifty Lift, Atlas Copco, Chicago Pneumatic, Allmand, Miller Curber, Skyjack, Lull, Skytrak, Tsurumi, Husquvarna Target, , Stow, Wacker, Sakai, Mi-T- M, Sullair, Basic, Dynapac, MBW, Weber, Bartell, Bennar Newman, Haulotte, Ditch Runner, Menegotti, Morrison, Contec, Buddy, Crown, Edco, Wyco, Bomag, Laymor, Barreto, EZ Trench, Bil-Jax, F.S. Curtis, Gehl Pavers, Heli, Honda, ICS/PowerGrit, IHI, Partner, Imer, Clipper, MMD, Koshin, Rice, CH&E, General Equipment, ,AMida, Coleman, NAC, Gradall, Square Shooter, Kent, Stanley, Tamco, Toku, Hatz, Kohler, Robin, Wisconsin, Northrock, Oztec, Toker TK, Rol-Air, Small Line, Wanco, Yanmar