An Oshkosh Corporation Company

www.Discount-Equipment.com

Service and Maintenance Manual

Model
740AJ

Prior to S/N 0300185827

P/N - 3121160

October 24, 2017

Go to Discount-Equipment.com to order your parts

ANSI

AS/NZS

PARTS FINDER

Search Website by Part Number

Discount Equipment

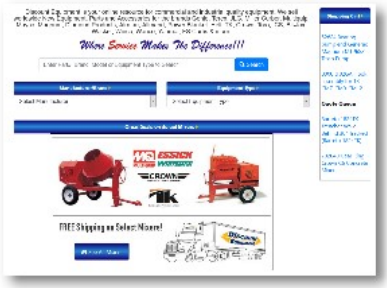

Search Manual Library For Parts Manual & Lookup Part Numbers – Purchase or Request Quote

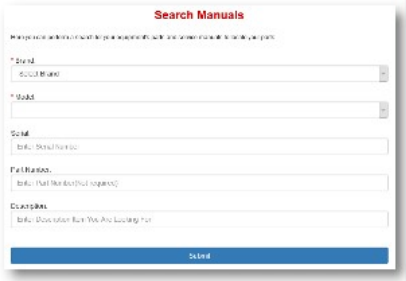

Can't Find Part or Manual? Request Help by Manufacturer, Model & Description

Discount-Equipment.com is your online resource for quality parts & equipment.
Florida: 561-964-4949 Outside Florida TOLL FREE: 877-690-3101

Go to Discount-Equipment.com to order your parts

Need parts?

Click on this link: http://www.discount-equipment.com/category/5443-parts/ and choose one of the options to help get the right parts and equipment you are looking for. Please have the machine model and serial number available in order to help us get you the correct parts. If you don't find the part on the website or on once of the online manuals, please fill out the request form and one of our experienced staff members will get back to you with a quote for the right part that your machine needs.

We sell worldwide for the brands: Genie, Terex, JLG, MultiQuip, Mikasa, Essick, Whiteman, Mayco, Toro Stone, Diamond Products, Generac Magnum, Airman, Haulotte, Barreto, Power Blanket, Nifty Lift, Atlas Copco, Chicago Pneumatic, Allmand, Miller Curber, Skyjack, Lull, Skytrak, Tsurumi, Husquvarna Target, , Stow, Wacker, Sakai, Mi-T- M, Sullair, Basic, Dynapac, MBW, Weber, Bartell, Bennar Newman, Haulotte, Ditch Runner, Menegotti, Morrison, Contec, Buddy, Crown, Edco, Wyco, Bomag, Laymor, Barreto, EZ Trench, Bil-Jax, F.S. Curtis, Gehl Pavers, Heli, Honda, ICS/PowerGrit, IHI, Partner, Imer, Clipper, MMD, Koshin, Rice, CH&E, General Equipment, ,AMida, Coleman, NAC, Gradall, Square Shooter, Kent, Stanley, Tamco, Toku, Hatz, Kohler, Robin, Wisconsin, Northrock, Oztec, Toker TK, Rol-Air, Small Line, Wanco, Yanmar

SECTION A. INTRODUCTION - MAINTENANCE SAFETY PRECAUTIONS

A GENERAL

This section contains the general safety precautions which must be observed during maintenance of the aerial platform. It is of utmost importance that maintenance personnel pay strict attention to these warnings and precautions to avoid possible injury to themselves or others, or damage to the equipment. A maintenance program must be followed to ensure that the machine is safe to operate.

⚠ WARNING

MODIFICATION OR ALTERATION OF AN AERIAL WORK PLATFORM SHALL BE MADE ONLY WITH WRITTEN PERMISSION FROM THE MANUFACTURER.

The specific precautions to be observed during maintenance are inserted at the appropriate point in the manual. These precautions are, for the most part, those that apply when servicing hydraulic and larger machine component parts.

Your safety, and that of others, is the first consideration when engaging in the maintenance of equipment. Always be conscious of weight. Never attempt to move heavy parts without the aid of a mechanical device. Do not allow heavy objects to rest in an unstable position. When raising a portion of the equipment, ensure that adequate support is provided.

⚠ WARNING

SINCE THE MACHINE MANUFACTURER HAS NO DIRECT CONTROL OVER THE FIELD INSPECTION AND MAINTENANCE, SAFETY IN THIS AREA IS THE RESPONSIBILITY OF THE OWNER/OPERATOR.

B HYDRAULIC SYSTEM SAFETY

It should be noted that the machines hydraulic systems operate at extremely high potentially dangerous pressures. Every effort should be made to relieve any system pressure prior to disconnecting or removing any portion of the system.

Do not use your hand to check for leaks. Use a piece of cardboard or paper to search for leaks. Wear gloves to help protect hands from spraying fluid.

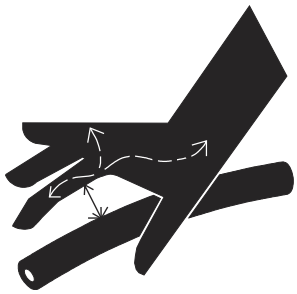

Relieve system pressure by cycling the applicable control several times with the engine stopped and ignition on, to direct any line pressure back into the reservoir. Pressure feed lines to system components can then be disconnected with minimal fluid loss.

C MAINTENANCE

⚠ WARNING

FAILURE TO COMPLY WITH SAFETY PRECAUTIONS LISTED IN THIS SECTION COULD RESULT IN MACHINE DAMAGE, PERSONNEL INJURY OR DEATH AND IS A SAFETY VIOLATION.

- ENSURE REPLACEMENT PARTS OR COMPONENTS ARE IDENTICAL OR EQUIVALENT TO ORIGINAL PARTS OR COMPONENTS.
- NO SMOKING IS MANDATORY. NEVER REFUEL DURING ELECTRICAL STORMS. ENSURE THAT FUEL CAP IS CLOSED AND SECURE AT ALL OTHER TIMES.
- REMOVE ALL RINGS, WATCHES AND JEWELLERY WHEN PERFORMING ANY MAINTENANCE.
- DO NOT WEAR LONG HAIR UNRESTRAINED, OR LOOSE-FITTING CLOTHING AND NECKTIES WHICH ARE APT TO BECOME CAUGHT ON OR ENTANGLED IN EQUIPMENT.
- OBSERVE AND OBEY ALL WARNINGS AND CAUTIONS ON MACHINE AND IN SERVICE MANUAL.
- KEEP OIL, GREASE, WATER, ETC. WIPED FROM STANDING SURFACES AND HAND HOLDS.
- USE CAUTION WHEN CHECKING A HOT, PRESSURIZED COOLANT SYSTEM.
- NEVER WORK UNDER AN ELEVATED BOOM UNTIL BOOM HAS BEEN SAFELY RESTRAINED FROM ANY MOVEMENT BY BLOCKING OR OVERHEAD SLING, OR BOOM SAFETY PROP HAS BEEN ENGAGED.
- BEFORE MAKING ADJUSTMENTS, LUBRICATING OR PERFORMING ANY OTHER MAINTENANCE, SHUT OFF ALL POWER CONTROLS.
- BATTERY SHOULD ALWAYS BE DISCONNECTED DURING REPLACEMENT OF ELECTRICAL COMPONENTS.
- KEEP ALL SUPPORT EQUIPMENT AND ATTACHMENTS STOWED IN THEIR PROPER PLACE.
- USE ONLY APPROVED, NON-FLAMMABLE CLEANING SOLVENTS.

Go to Discount Equipment.com to order your parts

REVISON LOG

Original Issue	- November 4, 2002
Revised	- September 8, 2003
Revised	- March 10, 2006
Revised	- September 28, 2007
Revised	- June 3, 2008
Revised	- January 8, 2013
Revised	- October 24, 2017

Go to Discount-Equipment.com to order your parts

SECTION NO.	TITLE	PAGE NO.
SECTION A - INTRODUCTION - MAINTENANCE SAFETY PRECAUTIONS		
A	General	A-1
B	Hydraulic System Safety	A-1
C	Maintenance	A-1
SECTION 1 - SPECIFICATIONS		
1.1	Operating Specifications	1-1
	Dimensional Data	1-1
	Capacities	1-1
1.2	Component Data	1-1
	Engine Data	1-1
	Tires	1-3
	Drive System (Prior to SN 0300138447)	1-3
	Drive System (SN 0300138447 through 0300185827)	1-3
	Swing System	1-3
	Hydraulic Drive Pump	1-3
	Variable Displacement Pump	1-3
	Hydraulic Load Sense Pump	1-3
	Auxiliary Power Pump	1-4
	Hydraulic Filter - In-line	1-4
1.3	Torque Requirements	1-4
1.4	Lubrication	1-5
	Hydraulic Oil	1-5
1.5	Cylinder Specifications	1-6
1.6	Major Component Weights	1-6
1.7	Pressure Settings	1-6
	Critical Stability Weights	1-6
1.8	Maintenance and Lubrication	1-7
1.9	Draining Oil Build Up From The Propane Regulator (Prior to SN 0300134626)	1-11
1.10	Propane Fuel Filter Replacement	1-12
1.11	Propane Fuel System Pressure Relief	1-13
SECTION 2 - GENERAL		
2.1	Machine Preparation, Inspection, and Maintenance	2-1
	General	2-1
	Preparation, Inspection, and Maintenance	2-1
	Pre-Start Inspection	2-1
	Pre-Delivery Inspection and Frequent Inspection	2-1
	Annual Machine Inspection	2-1
	Preventative Maintenance	2-1
2.2	Service and Guidelines	2-2
	General	2-2
	Safety and Workmanship	2-2
	Cleanliness	2-2
	Components Removal and Installation	2-2
	Component Disassembly and Reassembly	2-2
	Pressure-Fit Parts	2-2
	Bearings	2-3
	Gaskets	2-3
	Bolt Usage and Torque Application	2-3
	Hydraulic Lines and Electrical Wiring	2-3
	Hydraulic System	2-3
	Lubrication	2-3
	Battery	2-3
	Lubrication and Servicing	2-3

Go to Discount-Equipment.com to order your parts

SECTION NO.	TITLE	PAGE NO.
2.3	Lubrication and Information	2-4
	Hydraulic System	2-4
	Hydraulic Oil	2-4
	Changing Hydraulic Oil	2-4
	Lubrication Specifications	2-4
2.4	Cylinder Drift Test	2-5
	Theory	2-5
	Cylinder Leakage Test	2-5
	Cylinder Thermal Drift	2-5
2.5	Pins and Composite Bearing Repair Guidelines	2-6
2.6	Welding on JLG Equipment	2-6
	Do the Following When Welding on JLG Equipment	2-6
	Do NOT Do the Following When Welding on JLG Equipment	2-6
SECTION 3 - CHASSIS & TURNTABLE		
3.1	Tires & Wheels	3-1
	Tire Inflation	3-1
	Tire Damage	3-1
	Tire Replacement	3-1
	Wheel Replacement	3-1
	Wheel Installation	3-1
3.2	Emergency Towing	3-2
3.3	Wheel Drive Assembly (Prior to SN 0300138447)	3-8
	Removal	3-8
	Installation	3-8
3.4	Wheel Drive Assembly (SN 0300138447 through 0300185827)	3-9
	Removal	3-9
	Installation	3-9
3.5	Drive Hub (Prior to SN 0300185827)	3-10
	Disassembly	3-10
	Cleaning and Inspection	3-10
	Repair	3-10
	Assembly	3-13
3.6	Drive Brake - Mico (Prior to SN 0300138447)	3-18
	Disassembly	3-18
	Assembly	3-18
	Bleeding	3-20
3.7	Drive Brake (SN 0300138447 through 0300185827)	3-21
	Disassembly	3-21
	Inspection	3-21
	Assembly	3-21
3.8	Drive Motor (Prior to SN 0300138447)	3-23
	Spare Parts Kits	3-23
	Replacing the Drive Shaft Seal	3-24
	Disassembly and Assembly	3-25
	Assembly Notes	3-29
	Taper Roller Bearing Initial Tension	3-29
	Testing and Setup	3-31
	Drive Motor Adjustment Procedure (Prior to SN 0300138447)	3-31
3.9	Drive Motor (SN 0300138447 through 0300185827)	3-32
	Description	3-32
	Shaft Seal Replacement	3-32
	Loop Flushing Valve	3-33
	Troubleshooting	3-34
	Disassembly	3-35
	Inspection	3-39
	Assembly	3-41
	Initial Start-up Procedures	3-46

Go to Discount-Equipment.com to order your parts

SECTION NO.	TITLE	PAGE NO.
3.10	Swing Bearing	3-47
	Turntable Bearing Mounting Bolt Condition Check	3-47
	Wear Tolerance	3-50
	Swing Bearing Replacement	3-50
	Swing Bearing Torque Values	3-53
3.11	Swing Hub Removal	3-55
3.12	Swing Hub Installation	3-55
	Procedure For Setting Swing Gear Backlash	3-55
	Swing Drive Lubrication	3-56
3.13	Swing Hub (Prior to SN 0300074383)	3-57
	Disassembly	3-57
	Assembly	3-57
	Hub Shaft Sub-Assembly	3-60
	Carrier Sub-Assembly	3-62
3.14	Swing Hub (SN 0300074383 through 0300134352)	3-65
	Disassembly	3-65
	Main Assembly Procedure	3-65
	Hub Shaft Sub-Assembly	3-68
	Carrier Sub-Assembly	3-70
3.15	Swing Drive Brake (Prior to SN 0300134352)	3-73
	Disassembly	3-73
	Inspection	3-73
	Assembly	3-73
3.16	Swing Motor (Prior to SN 0300134352)	3-75
	Disassembly and inspection	3-75
	Assembly	3-82
	One Piece Stator Construction	3-89
3.17	Swing hub (SN 0300134353 through 0300185827)	3-90
	Roll, Leak and Brake Testing	3-90
	Tightening and Torquing Bolts	3-90
	Motor Control Valve Disassembly	3-91
	Motor and Brake Disassembly	3-92
	Main Drive Disassembly	3-93
	Hub-Shaft Disassembly	3-94
	Carrier Disassembly	3-95
	Hub-Shaft Assembly	3-96
	Carrier Assembly	3-96
	Main Drive Assembly	3-97
	Motor and Brake Assembly	3-98
	Motor Control Valve Assembly	3-98
3.18	Swing Motor (SN 0300134353 through 0300185827)	3-101
	Disassembly and Inspection	3-101
	Assembly	3-108
	One Piece Stator Construction	3-116
3.19	Rotary Coupling (Prior to SN 0300138447)	3-117
3.20	Rotary Coupling (SN 0300138447 through 0300185827)	3-121
3.21	Tilt Alarm Switch	3-126
	Manual Adjustment	3-126
3.22	Spark Arrester Cleaning Instructions	3-126
3.23	Deutz Engine	3-129
3.24	Ford Engine	3-131
3.25	GM Engine	3-134
3.26	Generator	3-138
	Every 250 hours	3-138
	Every 500 hours	3-138
	Overload Protection	3-138
	Inspecting Brushes, Replacing Brushes, and Cleaning Slip Rings	3-138

Go to Discount-Equipment.com to order your parts

SECTION NO.	TITLE	PAGE NO.
3.27	Dual Fuel System	3-141
	Changing from Gasoline to LP Gas	3-141
	Changing from LP Gas to Gasoline	3-141
3.28	EFI Engine	3-141
	Performing Diagnostics	3-141
	Engine Module and Sensors	3-142
	Fuel System	3-155
3.29	Ford LPG System	3-160
	Description	3-160
	Regulator	3-160
	Megajector	3-160
	Mixer	3-160
	Lockoff Solenoid	3-162
	Megajector Diagnostic Code Descriptions	3-162
3.30	Electric Governor Installation and Adjustments - Ford LRG425 Engine	3-163
	General	3-163
	Quick-start Installations	3-163
	Mounting-Actuator	3-163
	Linkage	3-164
	Mounting-Controller	3-164
	Wiring	3-165
	Power Distribution	3-165
	Check-Out and Initial Start-Up Procedures	3-165
	Troubleshooting	3-168
	Automatic Choke Adjustment Procedure	3-170
3.31	Deutz EMR 2	3-170
3.32	GM Engine General Maintenance	3-183
	Maintenance of the Drive Belt	3-183
	Engine Electrical System Maintenance	3-183
	Checking/Filling Engine Oil Level	3-183
	Changing The Engine Oil	3-184
	Coolant Fill Procedure - Dual Fuel Engine	3-184
3.33	GM Engine Dual Fuel System	3-186
	Fuel Filter	3-186
	Electric Lock Off	3-186
	EPR Assembly	3-186
	Low Pressure Regulator (LPR)	3-187
	Air Fuel Mixer	3-187
	Electronic Throttle Control (ETC)	3-188
	Engine Control Module	3-188
	Heated Exhaust Gas Oxygen Sensor	3-189
	Gasoline Multi Point Fuel Injection System (MPFI)	3-189
	Gasoline Fuel Pump	3-189
	Gasoline Pressure And Temperature Sensor Manifold	3-189
	Fuel Filter	3-190
	Fuel Injector Rail	3-190
	Fuel Injector	3-190

Go to Discount-Equipment.com to order your parts

SECTION NO.	TITLE	PAGE NO.
3.34	GM Engine Fuel System Repair	3-190
	Propane Fuel System Pressure Relief	3-190
	Propane Fuel System Leak Test	3-190
	Propane Fuel Filter Replacement	3-191
	Electronic Pressure Regulator (EPR) Assembly Replacement	3-192
	Temperature Manifold Absolute Pressure (TMAP) Sensor	3-193
	Electronic Throttle Control Replacement	3-194
	Mixer Replacement	3-195
	Coolant Hose Replacement	3-195
	Vapor Hose Replacement	3-195
	Engine Control Module Replacement	3-196
	Heated Exhaust Gas Oxygen Sensor Replacement	3-196
3.35	GM Engine LPG Fuel System Diagnosis	3-196
	Fuel System Description	3-196
	Diagnostic Aids	3-197
3.36	Air Compressor	3-210
	Description	3-210
	Oil Injection	3-210
	Inlet Valve and Control Valving	3-210
	Air Filter Unit	3-210
	Oil Reservoir and Primary Oil Separation	3-210
	Secondary Spin-On Oil Coalescer/Separator	3-210
	Spin-On Oil Filter	3-210
	Minimum Pressure Valve/Check Valve Assembly	3-212
	Hydraulic Drive System	3-212
	Compressor Cooling System	3-212
	Initial Startup	3-212
	Normal Startup Procedure	3-213
	Normal Shutdown Procedure	3-213
	Daily Operation	3-213
	General Maintenance	3-213
	Lubrication Guide	3-214
	Oil Filter Replacement	3-214
	Coalescer (Air/Oil Separator) Replacement	3-215
	Air Filter Replacement	3-215
	Belts - Tightening and Replacement	3-215
	Cooler Core Cleaning (Exterior)	3-216
	Adding/Changing Compressor Oil	3-216
	Pressure Adjustments	3-216
	Intake Control	3-217
	Minimum Pressure Valve	3-217
	Compressor Thermal Valve	3-217
	Safety Shutdown Systems	3-217
	Troubleshooting	3-217
3.37	Counterweight	3-220
SECTION 4 - BOOM & PLATFORM		
4.1	Platform	4-1
	Platform/Support Removal	4-1
	Support Installation	4-2
4.2	Rotator and Slave Cylinder	4-4
	Removal	4-4
	Installation	4-4
4.3	Main Boom Powertrack	4-5
	Removal	4-5
	Installation	4-5

Go to Discount-Equipment.com to order your parts

SECTION NO.	TITLE	PAGE NO.
4.4	Powertrack Maintenance	4-6
	Flat Bar Removal	4-6
	Round Bar/Poly Bar Removal	4-6
	Removing and Installing Links	4-7
	Installing a New Flat Bar	4-10
	Installing a New Round Bar/Poly Roller	4-11
	Replacing a Fixed End Bracket	4-11
	Replacing a Moving End Bracket	4-12
	Replacing a One Piece Bracket	4-12
4.5	Boom Cleanliness Guidelines	4-13
4.6	Main Boom Assembly	4-14
	Removal	4-14
	Disassembly	4-15
	Inspection	4-16
	Assembly	4-16
	Installation	4-17
4.7	Upright	4-18
	Removal	4-18
	Upright Level Cylinder Removal	4-18
	Installation	4-18
4.8	Tower Boom Assembly	4-19
	Removal	4-19
	Inspection	4-19
	Installation	4-20
	Tower Out of Sync	4-20
4.9	Articulating Jib Boom	4-23
	Removal	4-23
	Disassembly	4-23
	Inspection	4-23
	Assembly	4-24
	Installation	4-24
4.10	Limit Switches Adjustment	4-24
	Main Boom Horizontal Limit Switch	4-24
	Tower Boom Horizontal Limit Switch	4-24
4.11	Platform	4-27
	Platform Sections Replacement	4-27
4.12	Wear Pads	4-27
	Tower Boom	4-27
	Main Boom	4-28
4.13	Rotator - Helac (Prior to SN 0300130881)	4-28
	Disassembly	4-28
	Inspection	4-29
	Assembly	4-30
4.14	Rotator Assembly (SN 0300130881 through 0300185827)	4-32
	Theory of Operation	4-32
	Required Tools	4-32
	Disassembly	4-35
	Inspection	4-39
	Assembly	4-39
	Installing Counterbalance Valve	4-44
	Testing the Actuator	4-45
	Installation and Bleeding	4-45
	Troubleshooting	4-46
4.15	Drive Card Setup Procedures	4-47
	Lift, Swing, and Drive Cards	4-47
	Flow Control Card	4-47
4.16	Foot Switch Adjustment	4-48

Go to Discount-Equipment.com to order your parts

SECTION NO.	TITLE	PAGE NO.
4.17	Upright Monitoring System	4-48
	Re-Synchronizing Upright	4-48
	Calibration - Pre ADE Machines	4-50
	Calibration - ADE Equipped Machines	4-54
	Calibration Faults	4-58
	Function Check	4-59
	Service Mode/Tower Boom Retrieval	4-60
4.18	UMS Troubleshooting and Fault Messages Non-ADE Machines	4-66
	Tower Lift Down Permanently closed	4-66
	Backward Stability Concern Message	4-66
	Forward Stability Concern Message	4-66
	UMS Out of Usable Range Message	4-66
	Battery Voltage < 9.0 Volts	4-66
	Battery Voltage > 16.0 Volts	4-66
	UMS Sensor Not Calibrated Message	4-67
	UMS Sensor Faulted	4-67
	Tower Lift Down Output Short to Ground or Open Circuit	4-67
	Tower Lift Down Output Short to Battery	4-67
	Platform Indicator Output Short to Ground or Open Circuit	4-67
	Platform Indicator Output Short to Battery	4-67
	Ground Indicator Output Short to Ground	4-67
	Ground Indicator Output Short to Battery	4-67
	Turntable Sensor Not Calibrated Message	4-67
	Turntable Sensor Faulted	4-68
	EEPROM checksums failure	4-68
4.19	UMS Troubleshooting and Fault Messages-ADE Machines	4-68
	Backward Stability Concern Message	4-68
	Forward Stability Concern Message	4-68
	Auto Detection Input Low Message	4-68
	UMS Sensor Communications lost	4-68
	Out of Usable Range Message	4-69
	UMS Sensor Not Calibrated Message	4-69
	UMS Sensor Faulted Message	4-69
	Incompatible Software Detected Message	4-69
	Calibration Faults	4-69
4.20	Use and Care of Fall Arrest System	4-70
	Prior to Use Inspection	4-70
	Inspecting Cable Tension and Slip Indicator	4-70
	Annual Inspection and Certification	4-71
	Installation	4-71
4.21	Platform Load Sensing System	4-72
SECTION 5 - BASIC HYDRAULIC INFORMATION AND SCHEMATICS		
5.1	Lubricating O-Rings in the Hydraulic System	5-1
	Cup and Brush	5-1
	Dip Method	5-2
	Spray Method	5-2
	Brush-on Method	5-2
5.2	Valves - Theory Of Operation	5-3
	Solenoid Control Valve - Rexroth	5-3
	Relief Valves	5-3
5.3	Holding Valve Checks	5-3
5.4	Cylinders - Theory Of Operation	5-4
	Systems Incorporating Double Acting Cylinders	5-4
	Systems Incorporating Holding Valves	5-4

Go to Discount-Equipment.com to order your parts

SECTION NO.	TITLE	PAGE NO.
5.5	Cylinder Checking Procedure	5-5
	Cylinders Without Counterbalance Valves - Master Cylinder and Steer Cylinders	5-5
	Cylinders With Single Counterbalance Valve	5-5
	Cylinders With Dual Counterbalance Valves	5-6
5.6	Cylinder Repair	5-7
	Upright Level Cylinder	5-7
	Jib Lift Cylinder	5-13
	Main Boom Lift Cylinder	5-20
	Tower Lift Cylinder	5-26
	Master Cylinder	5-32
	Slave Cylinder	5-38
	Steer Cylinder (Prior to SN 0300142664)	5-44
	Steer Cylinder (SN 0300142664 through 0300185827)	5-49
	Main Telescope Cylinder	5-54
5.7	Cylinder Removal and Installation	5-60
	Main Boom Telescope Cylinder Removal	5-60
	Main Boom Telescope Cylinder Installation	5-61
	Main Lift Cylinder Removal	5-62
	Main Lift Cylinder Installation	5-63
	Upright Level Cylinder Removal	5-64
	Upright Level Cylinder Installation	5-66
	Tower Boom Lift Cylinder Removal	5-67
	Tower Boom Lift Cylinder Installation	5-68
	Slave Cylinder Removal	5-69
	Slave Cylinder Installation	5-69
5.8	Hydraulic Pump W/Hayes Pump Drive Coupling Lubrication	5-70
5.9	Pressure Setting Procedures	5-70
	Set Up the Function Pump	5-70
	Adjustments Made At The Main Valve Block	5-71
	4 Wheel Steer (If Equipped)	5-77
5.10	Hydraulic Oil Change-Out Procedure	5-78
5.11	Hydraulic Component Start-Up Procedures and Recommendations	5-79
5.12	Rexroth Variable Displacement Pump (Prior to SN 0300121643)	5-80
5.13	Sauer Piston Pump	5-82
	Initial Start-up Procedures	5-83
	Troubleshooting	5-83
	Shaft Seal Replacement	5-87
	Control Assembly	5-87
	Plug and Fitting Sizes and Torques	5-89
5.14	Eaton Piston Pump	5-90
	Servo Controlled Piston Pump	5-90
	Charge Pump Adapter Assembly	5-93
	Manual Servo Control Basic Assembly	5-94
	Manual Servo Control Assembly Options	5-95
	Rotating Kit Assembly	5-97
	Fault- logic Trouble Shooting	5-98
	Start-up Procedure	5-103
5.15	Hydraulic Schematics	5-104
SECTION 6 - JLG CONTROL SYSTEM		
6.1	JLG Control System Analyzer Kit Instructions	6-1
	Introduction	6-1
	To Connect the JLG Control System Analyzer	6-2
	Using the Analyzer	6-2
	Changing the Access Level of the Hand Held Analyzer	6-3
	Adjusting Configuration Using the Hand Held Analyzer	6-4
	Machine Setup	6-4
	Level Vehicle Description	6-5

Go to Discount-Equipment.com to order your parts

SECTION NO.	TITLE	PAGE NO.
6.2	CANbus Communications	6-50
6.3	Machine Orientation When Doing Speed Tests	6-51
	Test Notes	6-51
6.4	Machine Personality Settings	6-55
	Analyzer Diagnostics Menu Structure	6-69
SECTION 7 - BASIC ELECTRICAL INFORMATION & SCHEMATICS		
7.1	General	7-1
7.2	Multimeter Basics	7-1
	Grounding	7-1
	Backprobing	7-1
	Min/Max	7-1
	Polarity	7-1
	Scale	7-1
	Voltage Measurement	7-1
	Resistance Measurement	7-2
	Continuity Measurement	7-2
	Current Measurement	7-3
7.3	Applying Silicone Dielectric Compound to Electrical Connections	7-3
	Installation of Dielectric Grease	7-4
	Deutsch HD, DT, DTM, DRC Series	7-4
	AWP Seal	7-4
	AMP Mate-N-Lock	7-5
	DIN Connectors	7-5
	Exclusions	7-5
7.4	AMP Connector	7-7
	Applying Silicone Dielectric Compound to AMP Connectors	7-7
	Assembly	7-8
	Disassembly	7-10
	Wedge Lock	7-10
	Service - Voltage Reading	7-10
7.5	Deutsch Connectors	7-12
	DT/DTP Series Assembly	7-12
	DT/DTP Series Disassembly	7-12
	HD30/HDP20 Series Assembly	7-13
	HD30/HDP20 Series Disassembly	7-13
7.6	Electrical Schematics	7-20

Go to Discount-Equipment.com to order your parts

FIGURE NO.	TITLE	PAGE NO.
1-1.	Operator Maintenance and Lubrication Diagram	1-7
1-2.	Filter Lock Assembly	1-12
1-3.	Torque Chart - Sheet 1 of 5 (SAE Fasteners)	1-14
1-4.	Torque Chart - Sheet 2 of 5 (SAE Fasteners)	1-15
1-5.	Torque Chart - Sheet 3 of 5 (SAE Fasteners)	1-16
1-6.	Torque Chart - Sheet 4 of 5 (Metric fasteners)	1-17
1-7.	Torque Chart - Sheet 5 of 5 (Metric Fasteners)	1-18
2-1.	Engine Operating Temperature Specifications - Deutz	2-10
2-2.	Engine Operating Temperature Specifications - Ford	2-11
2-3.	Engine Operating Temperature Specifications - GM	2-12
3-1.	Drive Disconnect Hub	3-2
3-2.	Axle and Steering Installation - Sheet 1 of 2	3-4
3-3.	Axle and Steering Installation - Sheet 2 of 2	3-5
3-4.	Chassis Component Location	3-6
3-5.	Turntable Component Location	3-7
3-6.	Drive Hub Installation (Prior to SN 0300138447)	3-8
3-7.	Drive Hub Installation (SN 0300138447 through 0300185827)	3-9
3-8.	Drive Hub (Fairfield)	3-17
3-9.	Drive Brake - Mico (Prior to SN 0300138447)	3-19
3-10.	Drive Brake (SN 0300138447 through 0300185827)	3-22
3-11.	Drive Motor Cutaway	3-24
3-12.	Flow Control Pilot Valves	3-30
3-13.	Drive Motor Adjustment (Prior to SN 0300138447)	3-31
3-14.	Drive Motor Cross Section	3-32
3-15.	Removing the Shaft Seal	3-32
3-16.	Loop Flushing Spool	3-33
3-17.	Loop Flushing Spool	3-35
3-18.	Plugs, Fittings, and Speed Sensor	3-35
3-19.	End Cap	3-36
3-20.	Valve Plate & Rear Shaft Bearing	3-36
3-21.	Cylinder Kit	3-37
3-22.	Shaft Seal	3-37
3-23.	Shaft & Front Bearing	3-37
3-24.	Swash Plate & Servo Piston	3-38
3-25.	Cylinder Kit Disassembly	3-38
3-26.	Servo Piston	3-41
3-27.	Cylinder Kit Assembly	3-42
3-28.	Swash Plate and Journal Bearing	3-42
3-29.	Shaft and Front Bearing	3-43
3-30.	Cylinder Kit Installation	3-43
3-31.	Servo Spring and Minimum Angle Stop	3-43
3-32.	Valve Plate and Rear Bearing	3-44
3-33.	End Cap	3-44
3-34.	Shaft Seal	3-45
3-35.	Plugs and Fittings Installation	3-45
3-36.	Loop Flushing Spool	3-46
3-37.	Swing Bearing Tolerance Boom Placement - (Sheet 1 of 2)	3-48
3-38.	Swing Bearing Tolerance Boom Placement - (Sheet 2 of 2)	3-49
3-39.	Swing Bolt Feeler Gauge Check	3-50
3-40.	Swing Bearing Tolerance Measuring Point	3-50
3-41.	Swing Bearing Removal	3-51
3-42.	Swing Bearing Torque Sequence	3-52
3-43.	Swing Drive Installation	3-54
3-44.	Swing Hub (Prior to SN 0300074383)	3-64
3-45.	Swing Drive Hub (Fairfield) (SN 0300074383 through 0300134352)	3-72
3-46.	Swing Drive Brake (Prior to SN 0300134352)	3-74
3-47.	Swing Drive Motor (Prior to SN 0300134352)	3-76

Go to Discount-Equipment.com to order your parts

FIGURE NO.	TITLE	PAGE NO.
3-48.	Motor Control Valve	3-91
3-49.	Motor and Brake	3-92
3-50.	Main Drive Assembly	3-93
3-51.	Hub-Shaft	3-94
3-52.	Carrier	3-95
3-53.	Swing Drive Assembly (SN 0300134353 through 0300185827)	3-99
3-54.	Swing Motor and Brake Assembly (SN 0300134353 through 0300185827)	3-100
3-55.	Swing Drive Motor (SN 0300134353 through 0300185827)	3-102
3-56.	Rotary Coupling Seal Installation (Prior to SN 0300138447)	3-117
3-57.	Rotary Coupling Cutaway (Prior to SN 0300138447)	3-118
3-58.	Rotary Coupling Port Location (9 Port) (Prior to SN 0300138447)	3-119
3-59.	Rotary Coupling Installation (Prior to SN 0300138447)	3-120
3-60.	Rotary Coupling Seal Installation (SN 0300138447 through 0300185827)	3-121
3-61.	Rotary Coupling Cutaway (SN 0300138447 through 0300185827)	3-122
3-62.	Rotary Coupling Port Location (9 Port) (SN 0300138447 through 0300185827)	3-123
3-63.	Rotary Coupling Installation (SN 0300138447 through 0300185827)	3-124
3-64.	Tilt Switch Adjustment	3-126
3-65.	Auxiliary Pump	3-127
3-66.	Auxiliary Pump Location	3-128
3-67.	Deutz Engine Assembly (SN 0300077500 through 0300185827) - Sheet 1 of 2	3-129
3-68.	Deutz Engine Assembly (SN 0300077500 through 0300185827) - Sheet 2 of 2	3-130
3-69.	Ford LRG-425 Engine Assembly (Prior to SN 0300077500)	3-131
3-70.	Ford Engine Assembly (SN 0300077500 through 0300185827) - Sheet 1 of 2	3-132
3-71.	Ford Engine Assembly (SN 0300077500 through 0300185827) - Sheet 2 of 2	3-133
3-72.	GM Engine Assembly (Prior to SN 0300140592) - Sheet 1 of 2	3-134
3-73.	GM Engine Assembly (Prior to SN 0300140592) - Sheet 2 of 2	3-135
3-74.	GM Engine Assembly (SN 0300140592 through 0300185827) - Sheet 1 of 2	3-136
3-75.	GM Engine Assembly (SN 0300140592 through 0300185827) - Sheet 2 of 2	3-137
3-76.	Inspecting Generator Brushes, Replacing Brushes, and Cleaning Slip Rings	3-139
3-77.	EFI Component Location	3-151
3-78.	ECM/EPM Identification	3-154
3-79.	Typical Fuel System	3-156
3-80.	LPG System Components	3-161
3-81.	Check-Out and Initial Start-Up Procedures	3-167
3-82.	EMR 2 Engine Side Equipment	3-171
3-83.	Deutz EMR 2 Troubleshooting Flow Chart	3-172
3-84.	Deutz EMR 2 Vehicle Side Connection Diagram	3-173
3-85.	Deutz EMR 2 Engine Side Connection Diagram - Sheet 1 of 2	3-174
3-86.	Deutz EMR 2 Engine Side Connection Diagram - Sheet 2 of 2	3-175
3-87.	EMR 2 Engine Plug Pin Identification	3-176
3-88.	EMR 2 Vehicle Plug Pin Identification	3-177
3-89.	EMR2 Fault Codes - Sheet 1 of 5	3-178
3-90.	EMR2 Fault Codes - Sheet 2 of 5	3-179
3-91.	EMR2 Fault Codes - Sheet 3 of 5	3-180
3-92.	EMR2 Fault Codes - Sheet 4 of 5	3-181
3-93.	EMR2 Fault Codes - Sheet 5 of 5	3-182
3-94.	Engine Oil Dip Stick	3-183
3-95.	Electric Fuel Lock Off	3-186
3-96.	EPR Assembly	3-186
3-97.	Low Pressure Regulators	3-187
3-98.	Air Fuel Mixer	3-187
3-99.	ETC throttle control device	3-188
3-100.	LPG Engine Control Unit (ECM)	3-188
3-101.	ECM Assembly	3-188
3-102.	Heated Exhaust Gas Oxygen Sensor (HEGO)	3-189
3-103.	Gasoline Fuel Pressure and Temperature Manifold Assembly	3-189
3-104.	Filter Lock Assembly	3-191

Go to DNG Equipment.com to order your parts

FIGURE NO.	TITLE	PAGE NO.
3-105.	EPR Assembly	3-192
3-106.	Pressure Regulator Section	3-193
3-107.	(TMAP) Sensor & Electronic Throttle Control (ETC)	3-193
3-108.	Mixer Assembly	3-195
3-109.	EPR Assembly	3-196
3-110.	Air Compressor	3-211
3-111.	Counterweight	3-220
4-1.	Location of Components Platform Support	4-1
4-2.	Platform Support Torque Values (Prior to SN 0300130881)	4-3
4-3.	Platform Support Torque Values (SN 0300130881 through 0300185827)	4-3
4-4.	Location of Components - Rotator and Slave Cylinder	4-4
4-5.	Boom Power Track Components	4-5
4-6.	Location of Components - Upright	4-18
4-7.	Tower Boom Removal	4-19
4-8.	Location of Components - Articulating Jib	4-23
4-9.	Boom Valve and Limit Switches Location - Sheet 1 of 2	4-25
4-10.	Boom Valve and Limit Switches Location - Sheet 2 of 2	4-26
4-11.	Platform Section Replacement	4-27
4-12.	Location and Thickness of Wear Pads	4-27
4-13.	Removing Portion of End Cap	4-28
4-14.	Heating Setscrews	4-29
4-15.	Removing Setscrew	4-29
4-16.	Removing End Cap	4-29
4-17.	Removing Shaft from Housing	4-29
4-18.	Removing Sleeve from Housing	4-29
4-19.	Actuator Timing	4-30
4-20.	Rotator Assembly (HELAC)	4-31
4-21.	Rotator - Exploded View (SN 0300130881 through 0300185827)	4-33
4-22.	Rotator- Assembly Drawing (SN 0300130881 through 0300185827)	4-34
4-23.	Rotator Counterbalance Valve	4-44
4-24.	Control Card	4-48
4-25.	Releveling Valve	4-48
4-26.	Boom Upright Positioning	4-49
4-27.	UMS Sensor Location	4-63
4-28.	UMS Module Location	4-64
4-29.	UMS Module Pin Identification	4-65
4-30.	External Fall Arrest System Components	4-72
5-1.	Cylinder Barrel Support	5-7
5-2.	Capscrew Removal	5-7
5-3.	Cylinder Rod Support	5-7
5-4.	Upright Level Cylinder	5-8
5-5.	Tapered Bushing Removal	5-9
5-6.	Composite Bearing Installation	5-10
5-7.	Rod Seal Installation	5-10
5-8.	Cylinder Head Seal Installation	5-10
5-9.	Wiper Seal Installation	5-11
5-10.	Installation of Head Seal Kit	5-11
5-11.	Tapered Bushing Installation	5-11
5-12.	Seating the Tapered Bearing	5-11
5-13.	Hydrolock Piston Seal Installation	5-12
5-14.	Piston Seal Kit Installation	5-12
5-15.	Rod Assembly Installation	5-12
5-16.	Cylinder Barrel Support	5-13
5-17.	Capscrew Removal	5-13
5-18.	Cylinder Rod Support	5-13
5-19.	Jib Lift Cylinder (SN 0300069000 through 0300079612)	5-14
5-20.	Jib Lift Cylinder (SN 0300079613 through 0300185827)	5-15

Go to Discount-Equipment.com to order your parts

FIGURE NO.	TITLE	PAGE NO.
5-21.	Tapered Bushing Removal	5-16
5-22.	Composite Bearing Installation	5-17
5-23.	Rod Seal Installation	5-17
5-24.	Cylinder Head Seal Installation	5-17
5-25.	Wiper Seal Installation	5-18
5-26.	Installation of Head Seal Kit	5-18
5-27.	Tapered Bushing Installation	5-18
5-28.	Seating the Tapered Bearing	5-18
5-29.	Hydrolock Piston Seal Installation	5-19
5-30.	Piston Seal Kit Installation	5-19
5-31.	Rod Assembly Installation	5-19
5-32.	Cylinder Barrel Support	5-20
5-33.	Capscrew Removal	5-20
5-34.	Cylinder Rod Support	5-20
5-35.	Main Boom Lift Cylinder	5-21
5-36.	Tapered Bushing Removal	5-22
5-37.	Composite Bearing Installation	5-23
5-38.	Rod Seal Installation	5-23
5-39.	Cylinder Head Seal Installation	5-23
5-40.	Wiper Seal Installation	5-24
5-41.	Installation of Head Seal Kit	5-24
5-42.	Tapered Bushing Installation	5-24
5-43.	Seating the Tapered Bearing	5-24
5-44.	Piston Seal Kit Installation	5-25
5-45.	Rod Assembly Installation	5-25
5-46.	Cylinder Barrel Support	5-26
5-47.	Capscrew Removal	5-26
5-48.	Cylinder Rod Support	5-26
5-49.	Tower Lift Cylinder	5-27
5-50.	Tapered Bushing Removal	5-28
5-51.	Composite Bearing Installation	5-29
5-52.	Rod Seal Installation	5-29
5-53.	Cylinder Head Seal Installation	5-29
5-54.	Wiper Seal Installation	5-30
5-55.	Installation of Head Seal Kit	5-30
5-56.	Tapered Bushing Installation	5-30
5-57.	Seating the Tapered Bearing	5-30
5-58.	Hydrolock Piston Seal Installation	5-31
5-59.	Piston Seal Kit Installation	5-31
5-60.	Rod Assembly Installation	5-31
5-61.	Cylinder Barrel Support	5-32
5-62.	Capscrew Removal	5-32
5-63.	Cylinder Rod Support	5-32
5-64.	Master Cylinder	5-33
5-65.	Tapered Bushing Removal	5-34
5-66.	Composite Bearing Installation	5-35
5-67.	Rod Seal Installation	5-35
5-68.	Cylinder Head Seal Installation	5-35
5-69.	Wiper Seal Installation	5-36
5-70.	Installation of Head Seal Kit	5-36
5-71.	Tapered Bushing Installation	5-36
5-72.	Seating the Tapered Bearing	5-36
5-73.	Hydrolock Piston Seal Installation	5-37
5-74.	Piston Seal Kit Installation	5-37
5-75.	Rod Assembly Installation	5-37
5-76.	Cylinder Barrel Support	5-38
5-77.	Capscrew Removal	5-38

Go to Discount-Equipment.com to order your parts

FIGURE NO.	TITLE	PAGE NO.
5-78.	Cylinder Rod Support	5-38
5-79.	Slave Cylinder	5-39
5-80.	Tapered Bushing Removal	5-40
5-81.	Composite Bearing Installation	5-41
5-82.	Rod Seal Installation	5-41
5-83.	Cylinder Head Seal Installation	5-41
5-84.	Wiper Seal Installation	5-42
5-85.	Installation of Head Seal Kit	5-42
5-86.	Tapered Bushing Installation	5-42
5-87.	Seating the Tapered Bearing	5-42
5-88.	Hydrolock Piston Seal Installation	5-43
5-89.	Piston Seal Kit Installation	5-43
5-90.	Rod Assembly Installation	5-43
5-91.	Cylinder Barrel Support	5-44
5-92.	Spanner Nut Removal	5-44
5-93.	Cylinder Rod Support	5-44
5-94.	Steer Cylinder (Prior to SN 0300142664)	5-45
5-95.	Composite Bearing Installation	5-47
5-96.	Rod Seal Installation	5-47
5-97.	Cylinder Head Seal Installation	5-47
5-98.	Wiper Seal Installation	5-48
5-99.	Installation of Head Seal Kit	5-48
5-100.	Piston Seal Kit Installation	5-48
5-101.	Cylinder Barrel Support	5-49
5-102.	Spanner Nut Removal	5-49
5-103.	Cylinder Rod Support	5-49
5-104.	Steer Cylinder (SN 0300142664 through 0300185827)	5-50
5-105.	Composite Bearing Installation	5-52
5-106.	Rod Seal Installation	5-52
5-107.	Cylinder Head Seal Installation	5-52
5-108.	Wiper Seal Installation	5-53
5-109.	Installation of Head Seal Kit	5-53
5-110.	Piston Seal Kit Installation	5-53
5-111.	Cylinder Barrel Support	5-54
5-112.	Capscrew Removal	5-54
5-113.	Cylinder Rod Support	5-54
5-114.	Main Telescope Cylinder	5-55
5-115.	Tapered Bushing Removal	5-56
5-116.	Composite Bearing Installation	5-57
5-117.	Rod Seal Installation	5-57
5-118.	Cylinder Head Seal Installation	5-57
5-119.	Wiper Seal Installation	5-58
5-120.	Installation of Head Seal Kit	5-58
5-121.	Tapered Bushing Installation	5-58
5-122.	Seating the Tapered Bearing	5-58
5-123.	Piston Seal Kit Installation	5-59
5-124.	Rod Assembly Installation	5-59
5-125.	Components Main Boom and Tower Boom	5-60
5-126.	Main Control Valve Pressure Adjustments	5-72
5-127.	Main Valve Components - Sheet 1 of 2	5-73
5-128.	Main Valve Components - Sheet 2 of 2	5-74
5-129.	Valve Component Torque - Sheet 1 of 2	5-75
5-130.	Valve Component Torque - Sheet 2 of 2	5-76
5-131.	Variable Displacement Pump (Rexroth)	5-81
5-132.	Gauge Port Locations	5-82
5-133.	Shaft Seal and Retaining Ring	5-87
5-134.	Control Assembly	5-87

Go to Discount-Equipment.com to order your parts

FIGURE NO.	TITLE	PAGE NO.
5-135.	Plug Locations, Sizes, and Torques	5-89
5-136.	Endcover Inspection	5-90
5-137.	Housing Inspection	5-91
5-138.	Servo Piston Installation	5-91
5-139.	Bearing Or Bushing Inspection	5-93
5-140.	Charge Pump Adapter Assembly	5-93
5-141.	Manual Servo Control Basic Assembly	5-94
5-142.	Manual Servo Control Basic Assembly Option	5-95
5-143.	Neutral Lockout Switch Assembly	5-96
5-144.	Rotating Kit Assembly	5-97
5-145.	Gauge Locations	5-98
5-146.	Fault - Logic Troubleshooting	5-99
5-147.	Fault - Logic Troubleshooting	5-100
5-148.	Fault - Logic Troubleshooting	5-101
5-149.	Hydraulic Schematic (Prior to SN 0300137975) - Sheet 1 of 6	5-104
5-150.	Hydraulic Schematic (Prior to SN 0300137975) - Sheet 2 of 6	5-105
5-151.	Hydraulic Schematic (Prior to SN 0300137975) - Sheet 3 of 6	5-106
5-152.	Hydraulic Schematic (Prior to SN 0300137975) - Sheet 4 of 6	5-107
5-153.	Hydraulic Schematic (Prior to SN 0300137975) - Sheet 5 of 6	5-108
5-154.	Hydraulic Schematic (Prior to SN 0300137975) - Sheet 6 of 6	5-109
5-155.	Hydraulic Schematic (SN 0300137975 through 0300185827) - Sheet 1 of 6	5-110
5-156.	Hydraulic Schematic (SN 0300137975 through 0300185827) - Sheet 2 of 6	5-111
5-157.	Hydraulic Schematic (SN 0300137975 through 0300185827) - Sheet 3 of 6	5-112
5-158.	Hydraulic Schematic (SN 0300137975 through 0300185827) - Sheet 4 of 6	5-113
5-159.	Hydraulic Schematic (SN 0300137975 through 0300185827) - Sheet 5 of 6	5-114
5-160.	Hydraulic Schematic (SN 0300137975 through 0300185827) - Sheet 6 of 6	5-115
6-1.	Hand Held Analyzer	6-1
6-2.	ADE Block Diagram	6-7
6-3.	Analyzer Flow Chart, Prior to Version 5.X Software - Sheet 1 of 4	6-8
6-4.	Analyzer Flow Chart, Prior to Version 5.X Software - Sheet 2 of 4	6-9
6-5.	Analyzer Flow Chart, Prior to Version 5.X Software - Sheet 3 of 4	6-10
6-6.	Analyzer Flow Chart, Prior to Version 5.X Software - Sheet 4 of 4	6-11
6-7.	Analyzer Flow Chart, Version 5.X Software - Sheet 1 of 4	6-12
6-8.	Analyzer Flow Chart, Version 5.X Software - Sheet 2 of 4	6-13
6-9.	Analyzer Flow Chart, Version 5.X Software - Sheet 3 of 4	6-14
6-10.	Analyzer Flow Chart, Version 5.X Software - Sheet 4 of 4	6-15
6-11.	Analyzer Flow Chart Version 6.X Software - Sheet 1 of 8	6-16
6-12.	Analyzer Flow Chart Version 6.X Software - Sheet 2 of 8	6-17
6-13.	Analyzer Flow Chart Version 6.X Software - Sheet 3 of 8	6-18
6-14.	Analyzer Flow Chart Version 6.X Software - Sheet 4 of 8	6-19
6-15.	Analyzer Flow Chart Version 6.X Software - Sheet 5 of 8	6-20
6-16.	Analyzer Flow Chart Version 6.X Software - Sheet 6 of 8	6-21
6-17.	Analyzer Flow Chart Version 6.X Software - Sheet 7 of 8	6-22
6-18.	Analyzer Flow Chart Version 6.X Software - Sheet 8 of 8	6-23
6-19.	Ground Control Module Location (Prior to SN 0300139070)	6-24
6-20.	Ground Control Module Location (SN 0300139070 through 0300185827)	6-24
6-21.	Platform Control Module Location (Prior to SN 0300138447)	6-25
6-22.	Platform Control Module Location (SN 0300138447 through 0300185827)	6-25
6-23.	Analyzer Connecting Points	6-26
7-1.	Voltage Measurement (DC)	7-1
7-2.	Resistance Measurement	7-2
7-3.	Continuity Measurement	7-2
7-4.	Current Measurement (DC)	7-3
7-5.	Application to plug/male connector housing	7-4
7-6.	Use of Seal Plugs	7-5
7-7.	Brad-Harrison M12	7-6
7-8.	Phoenix Contact M12	7-6

Go to Discount-Equipment.com to order your parts

FIGURE NO.	TITLE	PAGE NO.

7-9. Connector Assembly Figure 1 7-8
7-10. AMP Connector 7-8
7-11. Connector Assembly Figure 2 7-9
7-12. Connector Assembly Figure 3 7-9
7-13. Connector Assembly Figure 4 7-9
7-14. Connector Disassembly 7-10
7-15. Connector Installation 7-11
7-16. DT/DTP Contact Installation 7-12
7-17. DT/DTP Contact Removal 7-12
7-18. HD/HDP Contact Installation 7-13
7-19. HD/HDP Locking Contacts Into Position 7-13
7-20. HD/HDP Contact Removal 7-13
7-21. HD/HDP Unlocking Contacts 7-13
7-22. Electrical Components Installation (Prior to SN 0300135982) - Sheet 1 of 2 7-14
7-23. Electrical Components Installation (Prior to SN 0300135982) - Sheet 2 of 2 7-15
7-24. Electrical Components Installation Without UGM (SN 0300135982 through 0300185827) - Sheet 1 of 2 7-16
7-25. Electrical Components Installation Without UGM (SN 0300135982 through 0300185827) - Sheet 2 of 2 7-17
7-26. Electrical Components Installation With UGM - Sheet 1 of 2 7-18
7-27. Electrical Components Installation With UGM - Sheet 2 of 2 7-19
7-28. Electrical Schematic - Deutz & Ford Engines without UGM - Sheet 1 of 2 7-20
7-29. Electrical Schematic - Deutz & Ford Engines without UGM - Sheet 2 of 2 7-21
7-30. Electrical Schematic - Deutz EMR2 & GM Engines (Prior to SN 0300099884) - Sheet 1 of 6 7-22
7-31. Electrical Schematic - Deutz EMR2 & GM Engines (Prior to SN 0300099884) - Sheet 2 of 6 7-23
7-32. Electrical Schematic - Deutz EMR2 & GM Engines (Prior to SN 0300099884) - Sheet 3 of 6 7-24
7-33. Electrical Schematic - Deutz EMR2 & GM Engines (Prior to SN 0300099884) - Sheet 4 of 6 7-25
7-34. Electrical Schematic - Deutz EMR2 & GM Engines (Prior to SN 0300099884) - Sheet 5 of 6 7-26
7-35. Electrical Schematic - Deutz EMR2 & GM Engines (Prior to SN 0300099884) - Sheet 6 of 6 7-27
7-36. Electrical Schematic - Deutz EMR2 & GM Engines (SN 0300099884 through 0300185827) - Sheet 1 of 6 7-28
7-37. Electrical Schematic - Deutz EMR2 & GM Engines (SN 0300099884 through 0300185827) - Sheet 2 of 6 7-29
7-38. Electrical Schematic - Deutz EMR2 & GM Engines (SN 0300099884 through 0300185827) - Sheet 3 of 6 7-30
7-39. Electrical Schematic - Deutz EMR2 & GM Engines (SN 0300099884 through 0300185827) - Sheet 4 of 6 7-31
7-40. Electrical Schematic - Deutz EMR2 & GM Engines (SN 0300099884 through 0300185827) - Sheet 5 of 6 7-32
7-41. Electrical Schematic - Deutz EMR2 & GM Engines (SN 0300099884 through 0300185827) - Sheet 6 of 6 7-33
7-42. Deutz and GM Engines with UGM - Sheet 1 of 10 7-34
7-43. Deutz and GM Engines with UGM - Sheet 2 of 10 7-35
7-44. Deutz and GM Engines with UGM - Sheet 3 of 10 7-36
7-45. Deutz and GM Engines with UGM - Sheet 4 of 10 7-37
7-46. Deutz and GM Engines with UGM - Sheet 5 of 10 7-38
7-47. Deutz and GM Engines with UGM - Sheet 6 of 10 7-39
7-48. Deutz and GM Engines with UGM - Sheet 7 of 10 7-40
7-49. Deutz and GM Engines with UGM - Sheet 8 of 10 7-41
7-50. Deutz and GM Engines with UGM - Sheet 9 of 10 7-42
7-51. Deutz and GM Engines with UGM - Sheet 10 of 10 7-43
7-52. GM Engine Schematic (Engine Schematic Only) - Sheet 1 of 2 7-44
7-53. GM Engine Schematic (Engine Schematic Only) - Sheet 2 of 2 7-45

Go to Discount-Equipment.com to order your parts

TABLE NO.	TITLE	PAGE NO.
1-1	Operating Specifications	1-1
1-2	Dimensional Data	1-1
1-3	Capacities	1-1
1-4	Ford LRG-425 Specifications	1-1
1-5	Deutz F4M2011F Specifications	1-2
1-6	Deutz D2011L04 Specifications	1-2
1-7	Caterpillar 3044C/3.4	1-2
1-8	GM 3.0L	1-2
1-9	Tire Specifications	1-3
1-10	Drive System Specifications	1-3
1-11	Drive System Specifications	1-3
1-12	Swing System Specifications	1-3
1-13	Hydraulic Drive Pump Specifications	1-3
1-14	Variable Displacement Pump Specifications	1-3
1-15	Hydraulic Load Sense Pump Specifications	1-3
1-16	Auxiliary Power Pump Specifications (SN 0300069000 through 0300109066)	1-4
1-17	Auxiliary Power Pump Specifications (SN 0300109067 through 0300140000)	1-4
1-18	Auxiliary Power Pump Specifications (SN 0300140001 through 0300185827)	1-4
1-19	Hydraulic FIlter Specifications	1-4
1-20	Torque Requirements	1-4
1-21	Hydraulic Oil	1-5
1-22	Mobilfluid 424 Specs	1-5
1-23	Mobil DTE 10 Excel 32 Specs	1-5
1-24	Mobil EAL 224 H Specs	1-5
1-25	UCon Hydrolube HP-5046 Specs	1-5
1-26	Cylinder Specifications	1-6
1-27	Major Component Weights	1-6
1-28	Pressure Settings	1-6
1-29	Critical Stability Weights	1-6
1-30	Lubrication Specifications	1-7
2-1	Inspection and Maintenance	2-2
2-2	Cylinder Drift	2-5
2-3	Inspection and Preventive Maintenance Schedule	2-7
3-1	Wheel Torque Chart	3-2
3-2	Troubleshooting	3-20
3-3	Excessive Noise and/or Vibration	3-34
3-4	System Operating Hot	3-34
3-5	Won't Shift or Slow to Start	3-34
3-6	Displacement Identifiers	3-37
3-7	Slipper Foot Thickness & End Play	3-39
3-8	Cylinder Block Measurements	3-40
3-9	Coupling Port Information Table (9 port) (Prior to SN 0300138447)	3-125
3-10	Coupling Port Information Table (9 port) (SN 0300138447 through 0300185827)	3-125
3-11	Troubleshooting	3-140
3-12	ECM Diagnostic Trouble Codes	3-143
3-13	EPM Diagnostic Trouble Codes	3-144
3-14	LPF Fuel System Diagnosis	3-198
3-15	Symptom Diagnosis	3-200
3-16	DTC to SPN/FMI Cross Reference Chart	3-208
3-17	Prime Lubricant Characteristics	3-214
3-18	Air Compressor Troubleshooting	3-218
4-1	Troubleshooting	4-46
4-2	Ramp Current Setting Range	4-48
4-3	Ramp time Setting	4-48
5-1	Symbols Used	5-82
5-2	Gauge and Port Information	5-82
5-2	Excessive Noise and/or Vibration	5-83

Go to Discount-Equipment.com to order your parts

TABLE NO.	TITLE	PAGE NO.
5-3	Actuator Response Is Sluggish	5-84
5-4	System Operating Hot	5-84
5-5	Low Pump Output Flow	5-85
5-6	Pressure or Flow Instability	5-85
5-7	System Pressure Not Reaching Pressure Compensator Setting	5-86
5-8	High Inlet Vacuum	5-86
6-1	Analyzer Abbreviations	6-6
6-2	Machine Configuration Programming Information Prior to Software Version P5.3	6-27
6-3	Machine Configuration Programming Information Software Version P5.3 to P6.1	6-31
6-4	Machine Configuration Programming Information Software Version P6.1 to Present	6-36
6-5	Machine Configuration Programming Information	6-41
6-6	Machine Configuration Programming Settings	6-49
6-7	Function Speeds (In Seconds)	6-51
6-8	Machine Configuration Parameters	6-52
6-9	Personality Ranges/Defaults	6-55
6-10	Help Fault Codes, Displayed Faults, and Descriptions - Prior to SN 0300066931	6-58
6-11	Diagnostic Trouble Code	6-61
6-12	ADJUSTMENTS - Personality Descriptions	6-69
6-13	Diagnostic Menu Descriptions	6-72

Go to Discount-Equipment.com to order your parts

PARTS FINDER

Search Website by Part Number

Discount Equipment

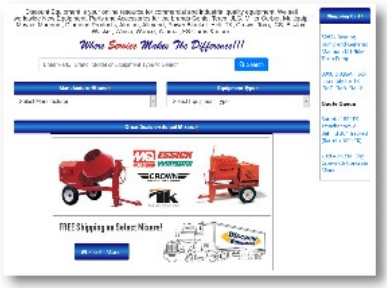

Search Manual Library For Parts Manual & Lookup Part Numbers – Purchase or Request Quote

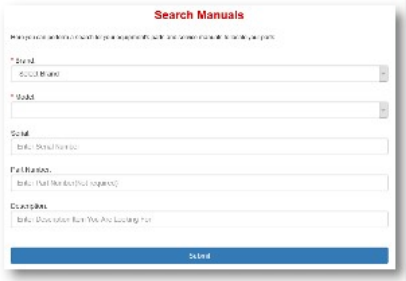

Can't Find Part or Manual? Request Help by Manufacturer, Model & Description

Discount-Equipment.com is your online resource for quality parts & equipment.
Florida: 561-964-4949 Outside Florida TOLL FREE: 877-690-3101

Go to Discount-Equipment.com to order your parts

Need parts?

Click on this link: http://www.discount-equipment.com/category/5443-parts/ and choose one of the options to help get the right parts and equipment you are looking for. Please have the machine model and serial number available in order to help us get you the correct parts. If you don't find the part on the website or on once of the online manuals, please fill out the request form and one of our experienced staff members will get back to you with a quote for the right part that your machine needs.

We sell worldwide for the brands: Genie, Terex, JLG, MultiQuip, Mikasa, Essick, Whiteman, Mayco, Toro Stone, Diamond Products, Generac Magnum, Airman, Haulotte, Barreto, Power Blanket, Nifty Lift, Atlas Copco, Chicago Pneumatic, Allmand, Miller Curber, Skyjack, Lull, Skytrak, Tsurumi, Husquvarna Target, , Stow, Wacker, Sakai, Mi-T- M, Sullair, Basic, Dynapac, MBW, Weber, Bartell, Bennar Newman, Haulotte, Ditch Runner, Menegotti, Morrison, Contec, Buddy, Crown, Edco, Wyco, Bomag, Laymor, Barreto, EZ Trench, Bil-Jax, F.S. Curtis, Gehl Pavers, Heli, Honda, ICS/PowerGrit, IHI, Partner, Imer, Clipper, MMD, Koshin, Rice, CH&E, General Equipment, ,AMida, Coleman, NAC, Gradall, Square Shooter, Kent, Stanley, Tamco, Toku, Hatz, Kohler, Robin, Wisconsin, Northrock, Oztec, Toker TK, Rol-Air, Small Line, Wanco, Yanmar

SECTION 1. SPECIFICATIONS

1.1 OPERATING SPECIFICATIONS

Table 1-1. Operating Specifications

Maximum Work Load (Capacity) ANSI Unrestricted: CE/AUS Unrestricted:	 500 lb. (227 kg) 500 lb. (230 kg)
Maximum Travel Grade with boom in stowed position (Gradeability) (4WD)	45%
Maximum Travel Grade with boom in stowed position (Side Slope)	5° ANSI 3° CE/AUS
Maximum Vertical Platform Height	74 ft. (22.5 m)
Maximum Horizontal Platform Reach	51 ft. 10 in. (15.8 m)
Ground Clearance	12 in. (30 cm)
Wheelbase	10 ft. (3.05 m)
Maximum Tire Load	17,755 lb. (8060 kg)
Maximum Drive Speed	3.0 mph (4.8 kph)
Maximum Hyd. Operating Pressure	4500 psi (310 Bar)
Electrical System Voltage	12 volts
Jet Blast Rating	90 mph (145 kph)
Max. Ground Bearing Pressure	84 psi (5.3 kg/cm^3)
Gross Machine Weight	36,200 lb. (16,420 kg)

Dimensional Data

Table 1-2. Dimensional Data

Turning Radius (Outside)	14 ft. 6 in. (4.42 m)
Turning Radius (Inside)	11 ft. (2.13 m)
Boom Elevation Above Grade Below Grade	 80 ft. 3 in. (24.46 m) 13 ft. 1 in. (3.99 m)
Machine Height (Stowed)	9 ft. 9.5 in. (2.98 m)
Machine Length (Stowed)	36 ft. 6 in. (11.13 m)
Machine Width	8 ft. (2.44 m)
Wheelbase	10 ft. (3.05 m)

Capacities

Table 1-3. Capacities

Fuel Tank	Approx. 39 gallons (147.6 liters)
Hydraulic Tank	Approx. 40 gallons (151.4 liters)
Hydraulic System (Including Tank)	77 gal. (291.4 L)
Drive Hub	17 ounces (0.5 L)
Engine Oil Capacity Ford Deutz Cooling System Crankcase Total Capacity Caterpillar Isuzu GM	 4.5 Quarts (4.25 L) w/Filter 5 Quarts (4.5 L) 11 Quarts (10.5 L) w/Filter 16 Quarts (15 L) 10.6 Quarts (10 L) 8.5 Quarts (8.0 L) 4.5 Quarts (4.25 L) w/Filter
Air Compressor	4 Quarts (3.8 L)

1.2 COMPONENT DATA

Engine Data

Table 1-4. Ford LRG-425 Specifications

Type	Water-cooled
Fuel	Gasoline
Oil Capacity	4.5 Quarts (4.25 L) w/Filter
Idle RPM	1000
Low RPM	1800
High RPM	2800
Alternator	95 Amp, Belt Drive
Fuel Consumption Low RPM High RPM	 3.45 GPH (13.06 lph) 4.60 GPH (17.41 lph)
Battery	1000 Cold Cranking Amps, 210 minute reserve Capacity, 12 VDC
Horsepower	74 @ 3000 RPM, full load
Cooling System	16 Quarts (15.14 L)
Spark Plug	AWSF-52-C
Spark Plug Gap	0.044 in. (1.117 mm)

Go to Discount-Equipment.com to order your parts

Table 1-5. Deutz F4M2011F Specifications

Type	Liquid Cooled (Oil)
Fuel	Diesel
Oil Capacity Cooling System Crankcase Total Capacity	 5 Quarts (4.5 L) 11 Quarts (10.5 L) w/Filter 16 Quarts (15 L)
Idle RPM	1000
Low RPM	1800
High RPM	2800
Alternator	55 Amp, belt drive
Fuel Consumption Low RPM High RPM	 1.90 GPH (7.19 lph) 2.50 GPH (9.46 lph)
Battery	1000 Cold Cranking Amps, 210 minutes Reserve Capacity, 12 VDC
Horsepower	65 hp (48.5kw)@ 3000 RPM, full load

Table 1-6. Deutz D2011L04 Specifications

Type	Liquid Cooled (Oil)
Fuel	Diesel
Oil Capacity Cooling System Crankcase Total Capacity	 5 Quarts (4.5 L) 11 Quarts (10.5 L) w/Filter 16 Quarts (15 L)
Idle RPM	1000
Low RPM	1800
High RPM	2600
Alternator	55 Amp, belt drive
Fuel Consumption Low RPM High RPM	 1.90 GPH (7.19 lph) 2.50 GPH (9.46 lph)
Battery	1000 Cold Cranking Amps, 210 minutes Reserve Capacity, 12 VDC
Horsepower	64 hp (47.7 kw)@ 2600 RPM, full load

Table 1-7. Caterpillar 3044C/3.4

Type	Four Stroke Cycle
Cylinders	4 in-line
Bore	3.70 in. (94 mm)
Stroke	4.72 in. (120 mm)
Aspiration	turbocharged
Compression ratio	19:1
Displacement	203 in^3 (3.33 L)
Firing Order	1-3-4-2
Rotation (viewed from flywheel)	Counterclockwise
Oil Capacity (w/filter)	10.6 Quarts (10 L)
Cooling System (Engine Only)	5.8 Quarts (5.5 L)
Idle RPM - 3044C	1000
Idle RPM - 3.4	1200
Low RPM	1800
High RPM	2800
Alternator	60 Amp, belt drive

Table 1-8. GM 3.0L

Fuel	Gasoline/LP Gas
No. of Cylinders	4
BHP Gasoline LP	 83 hp @ 3000 rpm 75 hp @ 3000 rpm
Bore	4.0 in. (101.6 mm)
Stroke	3.6 in. (91.44 mm)
Displacement	181 cu.in. (3.0 L, 2966 cc)
Oil Capacity w/filter	4.5 Quarts (4.25 L)
Minimum Oil Pressure at idle Hot	 6 psi (0.4 Bar) @ 1000 rpm 18 psi (1.2 Bar) @ 2000 rpm
Compression Ratio	9.2:1
Firing Order	1-3-4-2
Max. RPM	2800

Go to Discount-Equipment.com to order your parts

Tires

Table 1-9. Tire Specifications

Size	Type	Ply Rating	Load Range	Pressure
IN 385/65D 19.5	pneumatic	16	H	95 psi (6.5 bar)
IN 445/55D 19.5	pneumatic	16	H	85 psi (6.0 bar)
15 X 19.5	pneumatic	16	H	95 psi (6.5 bar)
18 X 19.5	pneumatic	16	H	95 psi (6.5 bar)
IN 385/65D 19.5	foam-filled	16	H	N/A
IN 445/55D 19.5	foam-filled	16	H	N/A
15 X 19.5	foam-filled	16	H	95 psi (6.5 bar)
18 X 19.5	foam-filled	16	H	95 psi (6.5 bar)

Drive System (Prior to SN 0300138447)

Table 1-10. Drive System Specifications

Drive Motor Displacement	2.75 cu. in. max. 1.1 cu. in. min. (45 cm^3 max. 12 cm^3 min.)
Drive Hub Ratio.	59.3:1
Drive Brake	Automatic spring applied, hydraulically released disc brakes.

Drive System (SN 0300138447 through 0300185827)

Table 1-11. Drive System Specifications

Drive Motor Displacement	2.13 cu. in. max. 0.63 cu. in. min. (35 cc max. 10.3 cc min.)
Drive Hub Ratio	87:1
Drive Brake	Automatic spring applied, hydraulically released disc brakes.

Swing System

Table 1-12. Swing System Specifications

Swing Motor Displacement	4 cu. in. (66 cm^3)
Swing Brake	Automatic spring applied hydraulically released disc brakes
Swing Hub Ratio	36.13:1

Hydraulic Drive Pump

Table 1-13. Hydraulic Drive Pump Specifications

Pump Output	35.5 GPM (134 lpm) @ 2800 RPM
Pump Displacement	2.8 cu. in. (46 cm^3)
Charge Pump Displacement	0.85 cu. in. (14 cm^3)
Charge Pump Output	9.5 GPM (37 ipm) @ 2800 RPM
Charge Pump Pressure	400 PSI. (27.5 Bar)@ 2800 RPM Clockwise Rotation

Variable Displacement Pump

Table 1-14. Variable Displacement Pump Specifications

Type	Variable, Displacement Open Loop Pump
Low Pressure Relief Valve Setting	400 psi (27.5 bar)
High Pressure Relief Valve Setting	2600 psi (179 bar)
Pump Circuit	Open
Displacement Vgmax	2.74 in^3 (45 cm^3)
Pressure and Flow Control	DFR1
Rotation	Clockwise
NBR seals	Nitrile rubber to DIN ISO 1629
Shaft	SAE 1.00 in. (2.54 cm) splined

Hydraulic Load Sense Pump

Table 1-15. Hydraulic Load Sense Pump Specifications

Pump Displacement	2.1 cu. in. (34.4 cm^3) Max.
Pump Output	15.5 GPM (59 lpm) @ 1800 RPM
Stand By Pressure	400 psi.(27.5 bar) @ 1800 RPM
High Pressure Relief	High Pressure Relief - 2700 psi.(186 bar)
Rotation	Clockwise

Go to Discount-Equipment.com to order your parts

Auxiliary Power Pump

Table 1-16. Auxiliary Power Pump Specifications (SN 0300069000 through 0300109066)

Pump Output	2.1 GPM (9.5 lpm) @ 1400 psi. (69 bar)
Pump Displacement	0.305 cu. in. (5 cm^3)
Valving	Non-Adj. Unloader Preset to 230 psi Adjustable Relief Set at 1800 psi.
Motor	12 V.D.C. 2T Extended EMC Protected Intermittent Duty
Rotation	Counterclockwise

Table 1-17. Auxiliary Power Pump Specifications (SN 0300109067 through 0300140000)

Pump Output	1.6 GPM (6.057 lpm) @ 1400 psi. (69 bar)
Pump Displacement	0.453 cu. in. (7.4 cm^3)
Valving	Non-Adj. Unloader Preset to 230 psi Adjustable Relief Set at 1800 psi.
Motor	12/24 V.D.C. 2T Extended EMC Protected Intermittent Duty
Rotation	Counterclockwise

Table 1-18. Auxiliary Power Pump Specifications (SN 0300140001 through 0300185827)

Pump Output	1.43GPM (5.4 lpm) @ 1800psi. (124 bar)
Pump Displacement	0.273 cu. in. (4.48 cm^3)
Motor	24V.D.C. 5.0 Extended Duty
Rotation	Counterclockwise

Hydraulic Filter - In-line

Table 1-19. Hydraulic FIlter Specifications

Return Filter	10 Microns Absolute
Charge Filter	10 Microns Absolute
Hydraulic Strainers (In Tank)	30 Microns

1.3 TORQUE REQUIREMENTS

Table 1-20. Torque Requirements

Description	Torque Value (Dry)	Interval Hours
Wheel Bolts	300 ft. lbs. (407 Nm)	150
Support to Rotator Bolts	85 ft. lbs. (116 Nm)	150
Rotator Center Bolt	480 ft. lbs. (651 Nm)	150
Swing Bearing Bolts	190 ft. lbs. (260 Nm)	50/600*
Starter or Aux Pump Solenoid Contacts Coil	 95 in. lbs. (10.5 Nm) 40 in. lbs. (4.5 Nm)	 As Required
Oxygen Sensor (Ford Engine)	29.5-40 ft. lbs. (40-54 Nm)	At Installation
Megajector Mounting Bolts (Ford Engine)	859 in. lbs. (97 Nm)	As Required
Lockoff Solenoid (Ford Engine)	8-12 ft. lbs. (11-16 Nm)	At Installation

*Check swing bearing bolts for security after first 50 hours of operation and every 600 hours thereafter. (See Swing Bearing in Section 3.)

NOTE: *When maintenance becomes necessary or a fastener has loosened, refer to the Torque Chart to determine proper torque value.*

Go to Discount-Equipment.com to order your parts

1.4 LUBRICATION

Hydraulic Oil

Table 1-21. Hydraulic Oil

Hydraulic System Operating Temperature Range	S.A.E. Viscosity Grade
+0° to + 180° F (-18° to +83° C)	10W
+0° to + 210° F (-18° to +99° C)	10W-20, 10W-30
+50° to + 210° F (+10° to +99° C)	20W-20

NOTE: *Hydraulic oils must have anti-wear qualities at least to API Service Classification GL-3, and sufficient chemical stability for mobile hydraulic system service. JLG Industries recommends Mobilfluid 424 hydraulic oil, which has an SAE viscosity index of 152.*

NOTE: *When temperatures remain consistently below 20 degrees F. (-7 degrees C.), JLG Industries recommends the use of Mobil DTE10.*

NOTE: *Aside from JLG recommendations, it is not advisable to mix oils of different brands or types, as they may not contain the same required additives or be of comparable viscosities.*

Table 1-22. Mobilfluid 424 Specs

SAE Grade	10W30
ISO Grade	55
Gravity, API	29.0
Density, Lb/Gal. 60°F	7.35
Pour Point, Max	-46°F (-43°C)
Flash Point, Min.	442°F (228°C)
Viscosity	
Brookfield, cP at -18°C	2700
at 40° C	55 cSt
at 100° C	9.3 cSt
Viscosity Index	152

Table 1-23. Mobil DTE 10 Excel 32 Specs

ISO Viscosity Grade	32
Pour Point, °C Max.	-54
Flash Point, °C Min.	250
Viscosity	
cSt @ 40° C	32.7
cSt @ 100° C	6.63
cSt @ 100° F	32.7
cSt @ 212° F	6.63
Viscosity Index	164
Density (Kg/l) @ 15°C	0.8468
Density (lb/in^3) @ 60°F	0.0305

Table 1-24. Mobil EAL 224 H Specs

Type	Biodegradable Vegetable Oil
ISO Viscosity Grade	32/46
Specific Gravity	0.922
Pour Point °C(°F)	-32°(-25°)
Flash Point °C(°F)	220°(428°)
Rust Protection, ASTM D 665A & BB	Pass Color, ASTM D 1500 Max 2.0
Operating Temp -17°-162°C	(0-180°F) Must be Stored Above 14°C (32°F)
Viscosity	
ASTM D445 cST 40°C	37
ASTM D445 cST 100°C	8.4
Viscosity Index, ASTM D 2270	213

Table 1-25. UCon Hydrolube HP-5046 Specs

pH	9.1
Specific Gravity, 20/20°F	1.082
Pour Point, °C(°F)	<-50(<58)
Appearance	Red Liquid
Viscosity	
at 0°C (32°F)	340cST(1600SUS)
at 40°C (104°F)	46cST(215SUS)
at 65°C (150°F)	22cST(106SUS)
Viscosity Index	170

Go to Discount-Equipment.com to order your parts

1.5 CYLINDER SPECIFICATIONS

Table 1-26. Cylinder Specifications

DESCRIPTION	BORE in. (mm.)	STROKE in. (mm.)	ROD DIA. in. (mm.)
Upright Level	8.00 (203.6)	42.00 (1066.8)	3.50 (88.9)
Tower Lift	8.00 (203.6)	49.4 (1254.3)	3.00 (76.2)
Main Lift	8.00 (203.2)	28.75 (730.3)	4.00 (101.6)
Telescope	3.50 (88.9)	206.5 (5245.1)	2.74 (70)
Steer	3.00 (76.2)	10.75 (273.1)	1.50 (38.1)
Master	3.50 (88.9)	18.50 (469.9)	1.50 (38.1)
Slave	3.50 (88.9)	17.50 (444.5)	1.50 (38.1)
Lift (Jib)	3.00 (76.2)	25.50 (647.7)	1.50 (38.1)

1.6 MAJOR COMPONENT WEIGHTS

Table 1-27. Major Component Weights

MAJOR COMPONENTS	LB.	KG.
Platform & Control Console	250	113
Main Boom (Inc. Slave Cylinder Rotator, And Support)	3185	1445
Main Lift Cylinder	445	202
Main Telescope Cylinder	459	218
Upright	1175	535
Upright Level Cylinder	585	265
Tower Boom Complete	3450	1565
Tower Lift Cylinder	544	247
Turntable Counterweight	4805	2180
Turntable Complete (Including Engine)	11025	5001
Chassis Complete	12620	5724
Machine Complete (GVW)	33100	15020
The above components are separate assemblies. Example: "TURNTABLE COMPLETE" does not include booms, upright, lift cylinders or platform. The weights of these components must be added for the total weight.		

1.7 PRESSURE SETTINGS

Table 1-28. Pressure Settings

Main Boom Lift Down Relief	1400 PSI. (97 Bar)
Swing Relief	1400 PSI. (97 Bar)
Platform Level Relief:	
Up	2800 PSI. (193 Bar)
Down	1800 PSI. (124 Bar)
Steer Relief	
2WS	1800 PSI. (124.11Bar)
4WS	2600 PSI. (179 Bar)
Tower Boom Telescope	2200 PSI. (151.7 Bar)
Articulating Jib Boom	
Up	2500 PSI. (172 Bar)
Down	1200 PSI. (83 Bar)

Critical Stability Weights

⚠ WARNING

DO NOT REPLACE ITEMS CRITICAL TO STABILITY WITH ITEMS OF DIFFERENT WEIGHT OR SPECIFICATION (FOR EXAMPLE: BATTERIES, FILLED TIRES, COUNTER WEIGHT, ENGINE, AND PLATFORM) DO NOT MODIFY UNIT IN ANY WAY TO EFFECT STABILITY.

Table 1-29. Critical Stability Weights

COMPONENTS		LB.	KG.
Tire & Wheel	18 X 19.5	675	305
Engine	Ford	600	209
	Deutz	534	242
	GM w/pumps	1030	468
Counterweight	Turntable	4805	2180
Wheel Hubs	Front & Rear	218	99
Platform	6 FT. (1.83 M)	205	93
	8 FT. (2.44 M)	230	105

Go to Discount-Equipment.com to order your parts

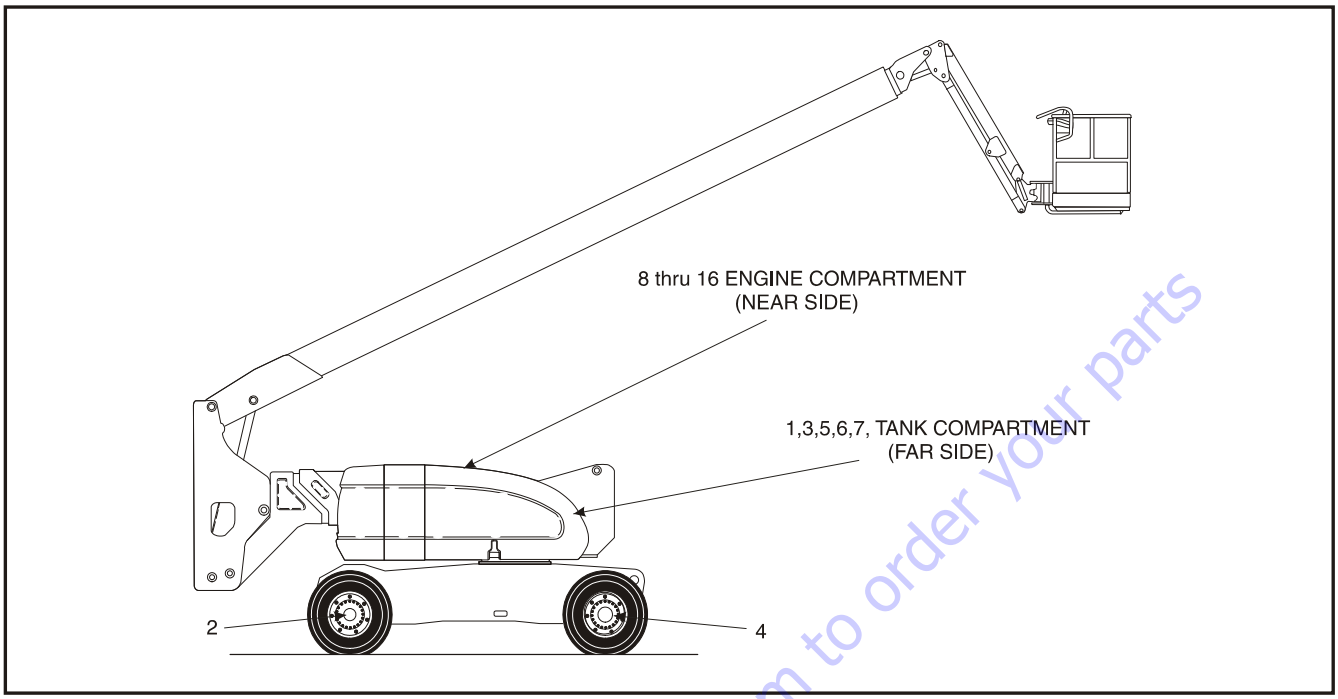

Figure 1-1. Operator Maintenance and Lubrication Diagram

1.8 MAINTENANCE AND LUBRICATION

NOTE: *The following numbers correspond to those in Figure 1-1., Operator Maintenance and Lubrication Diagram.*

Table 1-30. Lubrication Specifications

KEY	SPECIFICATIONS
MPG	Multipurpose Grease having a minimum dripping point of 350° F (177° C). Excellent water resistance and adhesive qualities, and being of extreme pressure type. (Timken OK 40 pounds minimum.)
EPGL	Extreme Pressure Gear Lube (oil) meeting API service classification GL-5 or MIL-Spec MIL-L-2105.
HO	Hydraulic Oil. API service classification GL-3, e.g. Mobilfluid 424.
EO	Engine (crankcase) Oil. Gas - API SF, SH, SG class, MIL-L-2104. Diesel - API CC/CD class, MIL-L-2104B/MIL-L-2104C.

NOTICE

LUBRICATION INTERVALS ARE BASED ON MACHINE OPERATION UNDER NORMAL CONDITIONS. FOR MACHINES USED IN MULTI-SHIFT OPERATIONS AND/OR EXPOSED TO HOSTILE ENVIRONMENTS OR CONDITIONS, LUBRICATION FREQUENCIES MUST BE INCREASED ACCORDINGLY.

NOTE: *It is recommended as a good practice to replace all filters at the same time.*

1. Swing Bearing - Internal Ball Bearing

Lube Point(s) - 2 Grease Fittings
Capacity - A/R
Lube - MPG
Interval - Every 3 months or 150 hrs of operation.
Comments - Remote Access

Go to Discount-Equipment.com to order your parts

2. Wheel Bearings

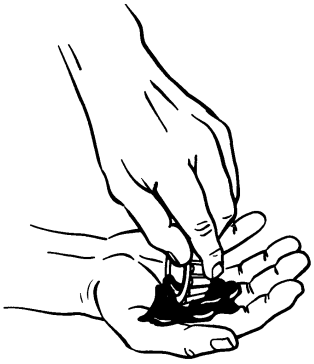

Lube Point(s) - Repack
Capacity - A/R
Lube - MPG
Interval - Every 2 years or 1200 hours of operation.

3. Wheel Drive Hub

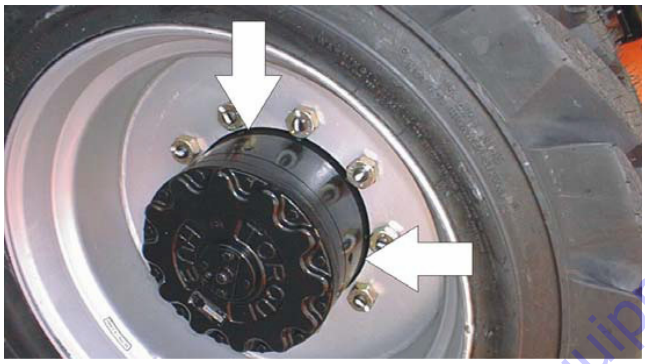

Lube Point(s) - Level/Fill Plug
Capacity - 17 oz. (0.5 L) - 1/2 Full
Lube - EPGL
Interval - Check level every 3 months or 150 hrs of operation; change every 2 years or 1200 hours of operation.
Comments - Place Fill port at 12 o'clock position and Check port at 3 o'clock position. Pour lubricant into fill port until it just starts to flow out of check port.

4. Hydraulic Return Filter

Interval - Change after first 50 hrs. and every 6 months or 300 hrs. thereafter or as indicated by Condition Indicator.

5. Hydraulic Charge Filter

Interval - Change after first 50 hrs. and every 6 months or 300 hrs. thereafter or as indicated by Condition Indicator.

6. Hydraulic Tank

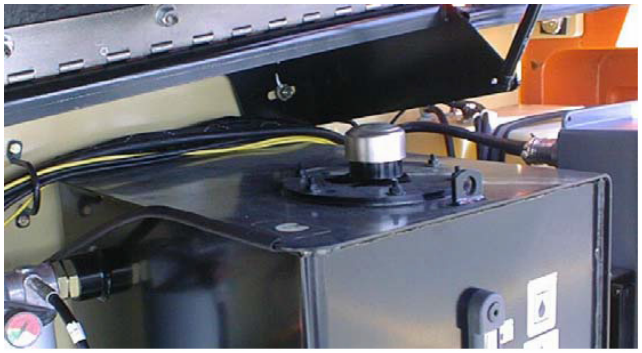

Lube Point(s) - Fill Cap
Capacity - 40 gallons (151 L) Tank; 77 gallons (291.4 L) System
Lube - HO
Interval - Check Level daily; Change every 2 years or 1200 hours of operation.

Go to Discount-Equipment.com to order your parts

7. Suction Strainers

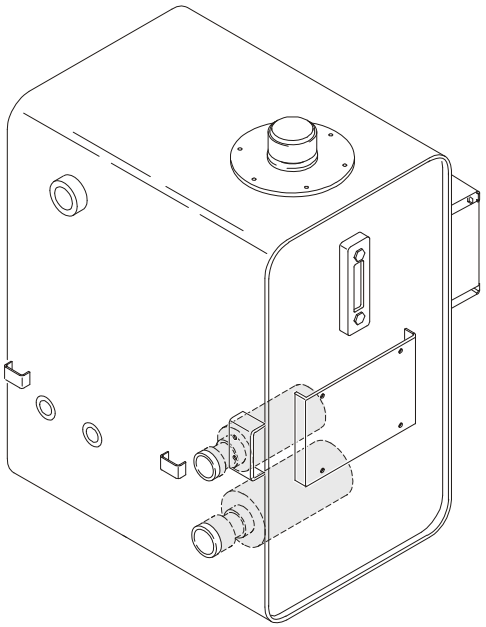

Lube Point(s) - 2
Interval - Every 2 years or 1200 hours of operation, remove and clean at time of hydraulic oil change.

8. Oil Change w/Filter - Ford

Lube Point(s) - Fill Cap/Spin-on Element
Capacity - 4.5 Quarts
Lube - EO
Interval - 3 Months or 150 hours of operation.
Comments - Check level daily/Change in accordance with engine manual.

9. Oil Change w/Filter - Deutz

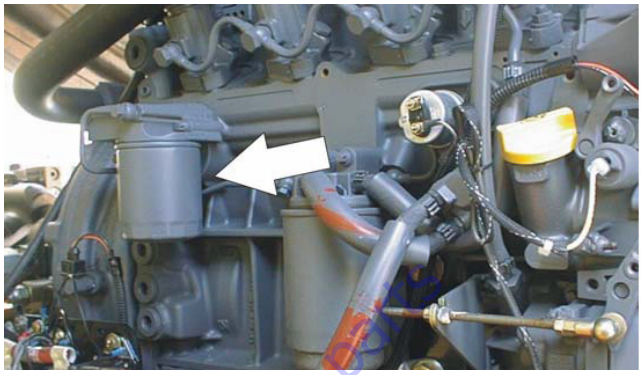

Lube Point(s) - Fill Cap/Spin-on Element
Capacity - 11 Quarts(10.5 L) Crankcase
Lube - EO
Interval - Every Year or 1200 hours of operation.
Comments - Check level daily/Change in accordance with engine manual.

10. Oil Change w/Filter - GM

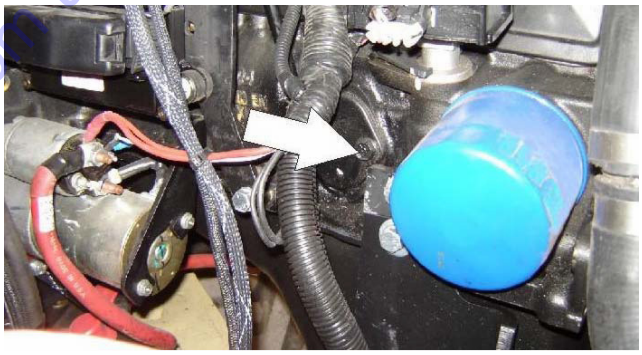

Lube Point(s) - Fill Cap/Spin-on Element
(JLG P/N 7027965)
Capacity - 4.5 qt. (4.25 L) w/filter
Lube - EO
Interval - 3 Months or 150 hours of operation.
Comments - Check level daily/Change in accordance with engine manual.

11. Fuel Filter - Ford

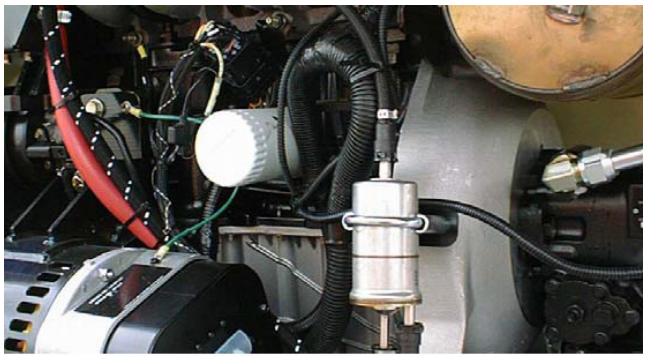

Go to Discount Equipment.com to order your parts

Lube Point(s) - Replaceable Element
Interval - Every Year or 1200 hours of operation.

12. Fuel Filter - Deutz

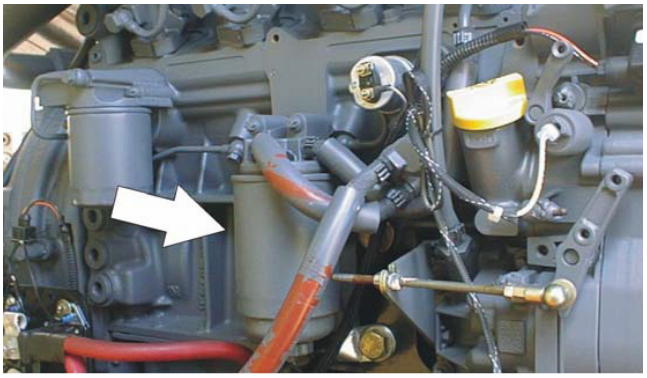

Lube Point(s) - Replaceable Element
Interval - Every Year or 600 hours of operation.

13. Fuel Filter (Gasoline) - GM

Lube Point(s) - Replaceable Element
Interval - Every 6 months or 300 hours of operation.

14. Air Filter

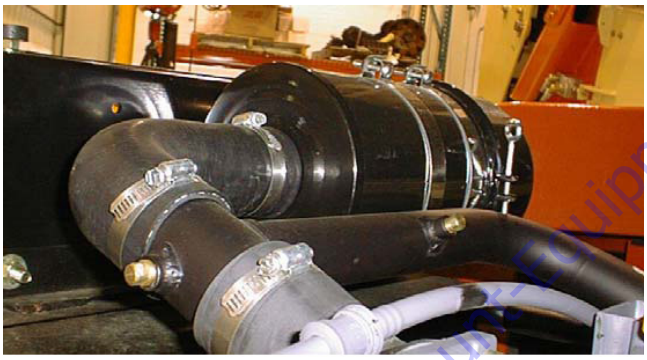

Lube Point(s) - Replaceable Element
Interval - Every 6 months or 300 hours of operation or as indicated by the condition indicator.

15. Electronic Pressure Regulator (LP only)

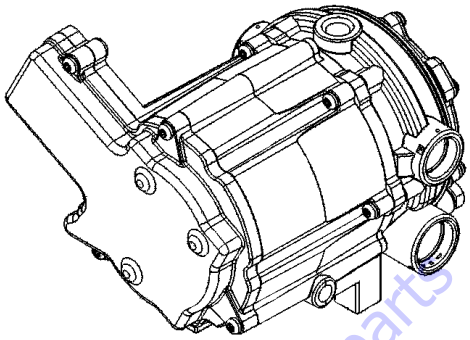

Interval - 3 Months or 150 hours of operation.
Comments - Drain oil build up. Refer to "Draining Oil Build Up From The Propane Regulator (Prior to SN 0300134626)" .

16. Fuel Filter (Propane) - GM Engine

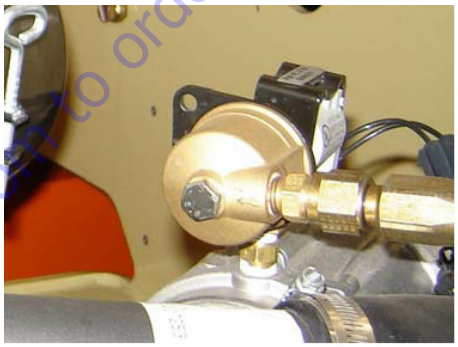

Interval - 3 Months or 150 hours of operation.
Comments - Replace filter. Refer to Propane Fuel Filter Replacement.

Go to Discount-Equipment.com to order your parts

1.9 DRAINING OIL BUILD UP FROM THE PROPANE REGULATOR (PRIOR TO SN 0300134626)

During the course of normal operation oils may build inside the primary and secondary chambers of the propane pressure regulator. These oils may be a result of poor fuel quality, contamination of the fuel supply chain, or regional variation in the make up of the fuel. If the build up of the oil is significant this can effect the operation of the fuel control system. Refer to "Maintenance and Lubrication" on page 7. for maintenance intervals. More frequent draining may be required if the fuel supply has been contaminated.

NOTICE

FOR BEST RESULTS WARM THE ENGINE TO OPERATING TEMPERATURE BEFORE DRAINING. THIS WILL ALLOW THE OILS TO BE LIQUID AND FLOW FREELY FROM THE REGULATOR.

1. Move the equipment to a well ventilated area. Ensure there are no external ignition sources.
2. Start the engine and bring to operating temperature.
3. With the engine running, close the manual tank valve and run the engine out of fuel.
4. Push in the Emergency Switch once the engine stops.
5. Disconnect the electrical connection to the LPG fuel temperature sensor in the auxiliary fuel port of the EPR.

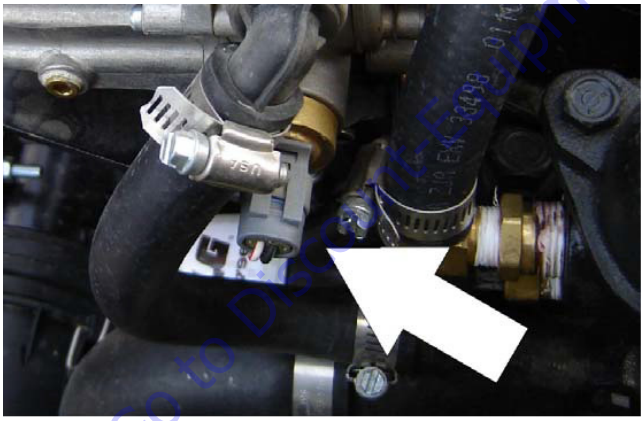

6. Remove the retainer clip for the LPG fuel temperature sensor and remove the sensor from the regulator body.

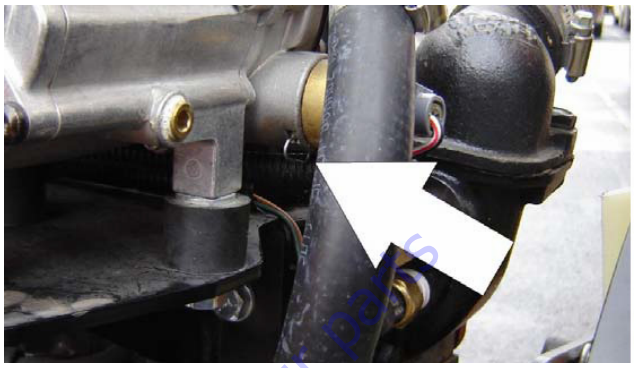

NOTE: *Have a small container ready to collect oil that will drain freely from the regulator at this point.*

7. Once all of the oil has been drained, reinstall the LPG fuel temperature sensor and reconnect the electrical connector.
8. Open the fuel tank manual valve.
9. Start the engine and verify all connections are secure.
10. Dispose of any drained oil in a safe and proper fashion.

Go to Discount-Equipment.com to order your parts

1.10 PROPANE FUEL FILTER REPLACEMENT

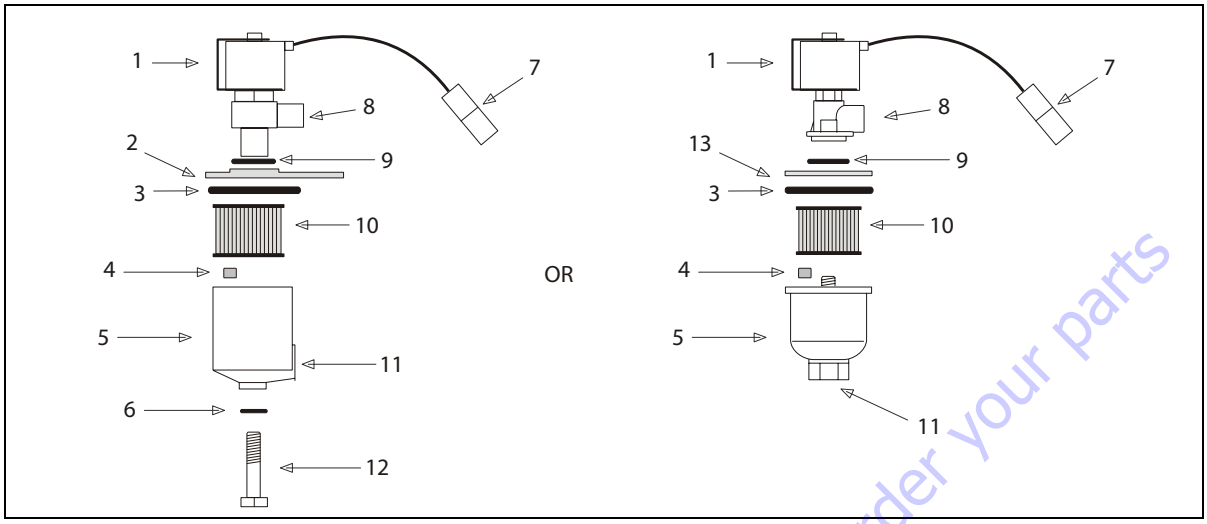

1. Electric Lock Off Solenoid
2. Mounting Plate
3. Housing Seal
4. Filter Magnet
5. Filter Housing
6. Seal
7. Electrical Connector
8. Fuel Outlet
9. O-ring
10. Filter
11. Fuel Inlet
12. Retaining Bolt
13. Ring

Figure 1-2. Filter Lock Assembly

Go to Discount-Equipment.com to order your parts

REMOVAL

1. Relieve the propane fuel system pressure. Refer to Propane Fuel System Pressure Relief.
2. Disconnect the negative battery cable.
3. Slowly loosen the Filter housing and remove it.
4. Pull the filter housing from the Electric lock off assembly.
5. Remove the filter from the housing.
6. Locate Filter magnet and remove it.
7. Remove and discard the housing seal.
8. If equipped, remove and discard the retaining bolt seal.
9. Remove and discard mounting plate to lock off O-ring seal.

INSTALLATION

NOTICE

BE SURE TO REINSTALL THE FILTER MAGNET INTO THE HOUSING BEFORE INSTALLING NEW SEAL.

1. Install the mounting plate to lock off O-ring seal.
2. If equipped, install the retaining bolt seal.
3. Install the housing seal.
4. Drop the magnet into the bottom of the filter housing.
5. Install the filter into the housing.
6. If equipped, install the retaining bolt into the filter housing.
7. Install the filter up to the bottom of the electric lock off.
8. Tighten the filter bowl retainer to 106 in. lb. (12 Nm).
9. Open manual shut-off valve. Start the vehicle and leak check the propane fuel system at each serviced fitting. Refer to Propane Fuel System Leak Test.

1.11 PROPANE FUEL SYSTEM PRESSURE RELIEF

⚠ CAUTION

THE PROPANE FUEL SYSTEM OPERATES AT PRESSURES UP TO 312 PSI (21.5 BAR). TO MINIMIZE THE RISK OF FIRE AND PERSONAL INJURY, RELIEVE THE PROPANE FUEL SYSTEM PRESSURE (WHERE APPLICABLE) BEFORE SERVICING THE PROPANE FUEL SYSTEM COMPONENTS.

To relieve propane fuel system pressure:

1. Close the manual shut-off valve on the propane fuel tank.
2. Start and run the vehicle until the engine stalls.
3. Turn the ignition switch OFF.

⚠ CAUTION

RESIDUAL VAPOR PRESSURE WILL BE PRESENT IN THE FUEL SYSTEM. ENSURE THE WORK AREA IS WELL VENTILATED BEFORE DISCONNECTING ANY FUEL LINE.

Go to Discount-Equipment.com to order your parts

Values for Zinc Yellow Chromate Fasteners (Ref 4150707)																		
SAE GRADE 5 BOLTS & GRADE 2 NUTS													SAE GRADE 8 (HEX HD) BOLTS & GRADE 8 NUTS*					
Size	TPI	Bolt Dia	Tensile Stress Area	Clamp Load	Torque (Dry)		Torque Lubricated		Torque (Loctite® 242™ or 271™ OR Vibra-TITE™ 111 or 140)		Torque (Loctite® 262™ or Vibra-TITE™ 131)		Clamp Load	Torque (Dry or Loctite® 263) K= 0.20		Torque (Loctite® 242™ or 271™ OR Vibra-TITE™ 111 or 140) K=.18		Torque (Loctite® 262™ or Vibra-TITE™ 131) K=0.15	
		In	Sq In	LB	IN-LB	[N.m]	IN-LB	[N.m]	IN-LB	[N.m]	IN-LB	[N.m]	LB	IN-LB	[N.m]	IN-LB	[N.m]	IN-LB	[N.m]
4	40	0.1120	0.00604	380	8	0.9	6	0.7											
	48	0.1120	0.00661	420	9	1.0	7	0.8											
6	32	0.1380	0.00909	580	16	1.8	12	1.4											
	40	0.1380	0.01015	610	18	2.0	13	1.5											
8	32	0.1640	0.01400	900	30	3.4	22	2.5											
	36	0.1640	0.01474	940	31	3.5	23	2.6					1320	43	5				
10	24	0.1900	0.01750	1120	43	4.8	32	3.5					1580	60	7				
	32	0.1900	0.02000	1285	49	5.5	36	4					1800	68	8				
1/4	20	0.2500	0.0318	2020	96	10.8	75	9	105	12			2860	143	16	129	15		
	28	0.2500	0.0364	2320	120	13.5	86	10	135	15			3280	164	19	148	17		
		In	Sq In	LB	FT-LB	[N.m]	FT-LB	[N.m]	FT-LB	[N.m]	FT-LB	[N.m]	LB	FT-LB	[N.m]	FT-LB	[N.m]	FT-LB	[N.m]
5/16	18	0.3125	0.0524	3340	17	23	13	18	19	26	16	22	4720	25	35	20	25	20	25
	24	0.3125	0.0580	3700	19	26	14	19	21	29	17	23	5220	25	35	25	35	20	25
3/8	16	0.3750	0.0775	4940	30	41	23	31	35	48	28	38	7000	45	60	40	55	35	50
	24	0.3750	0.0878	5600	35	47	25	34	40	54	32	43	7900	50	70	45	60	35	50
7/16	14	0.4375	0.1063	6800	50	68	35	47	55	75	45	61	9550	70	95	65	90	50	70
	20	0.4375	0.1187	7550	55	75	40	54	60	82	50	68	10700	80	110	70	95	60	80
1/2	13	0.5000	0.1419	9050	75	102	55	75	85	116	68	92	12750	105	145	95	130	80	110
	20	0.5000	0.1599	10700	90	122	65	88	100	136	80	108	14400	120	165	110	150	90	120
9/16	12	0.5625	0.1820	11600	110	149	80	108	120	163	98	133	16400	155	210	140	190	115	155
	18	0.5625	0.2030	12950	120	163	90	122	135	184	109	148	18250	170	230	155	210	130	175
5/8	11	0.6250	0.2260	14400	150	203	110	149	165	224	135	183	20350	210	285	190	260	160	220
	18	0.6250	0.2560	16300	170	230	130	176	190	258	153	207	23000	240	325	215	290	180	245
3/4	10	0.7500	0.3340	21300	260	353	200		285	388	240	325	30100	375	510	340	460	280	380
	16	0.7500	0.3730	23800	300	407	220	298	330	449	268	363	33600	420	570	380	515	315	430
7/8	9	0.8750	0.4620	29400	430	583	320	434	475	646	386	523	41600	605	825	545	740	455	620
	14	0.8750	0.5090	32400	470	637	350	475	520	707	425	576	45800	670	910	600	815	500	680
1	8	1.0000	0.6060	38600	640	868	480	651	675	918	579	785	51500	860	1170	770	1045	645	875
	12	1.0000	0.6630	42200	700	949	530	719	735	1000	633	858	59700	995	1355	895	1215	745	1015
1 1/8	7	1.1250	0.7630	42300	800	1085	600	813	840	1142	714	968	68700	1290	1755	1160	1580	965	1310
	12	1.1250	0.8560	47500	880	1193	660	895	925	1258	802	1087	77000	1445	1965	1300	1770	1085	1475
1 1/4	7	1.2500	0.9690	53800	1120	1518	840	1139	1175	1598	1009	1368	87200	1815	2470	1635	2225	1365	1855
	12	1.2500	1.0730	59600	1240	1681	920	1247	1300	1768	1118	1516	96600	2015	2740	1810	2460	1510	2055
1 3/8	6	1.3750	1.1550	64100	1460	1979	1100	1491	1525	2074	1322	1792	104000	2385	3245	2145	2915	1785	2430
	12	1.3750	1.3150	73000	1680	2278	1260	1708	1750	2380	1506	2042	118100	2705	3680	2435	3310	2030	2760
1 1/2	6	1.5000	1.4050	78000	1940	2630	1460	1979	2025	2754	1755	2379	126500	3165	4305	2845	3870	2370	3225
	12	1.5000	1.5800	87700	2200	2983	1640	2224	2300	3128	1974	2676	142200	3555	4835	3200	4350	2665	3625

NOTES: 1. THESE TORQUE VALUES DO NOT APPLY TO CADMIUM PLATED FASTENERS
2. ALL TORQUE VALUES ARE STATIC TORQUE MEASURED PER STANDARD AUDIT METHODS TOLERANCE = ±10%
3. * ASSEMBLY USES HARDENED WASHER

NO. 5000059 REV. K

Figure 1-3. Torque Chart - Sheet 1 of 5 (SAE Fasteners)

REFERENCE JLG THREAD LOCKING COMPOUND			
JLG P/N	Loctite® P/N	ND Industries P/N	Description
0100011	242™	Vibra-TITE™ 121	Medium Strength (Blue)
0100019	271™	Vibra-TITE™ 140	High Strength (Red)
0100071	262™	Vibra-TITE™ 131	Medium - High Strength (Red)

Go to Discount Equipment.com to order your parts

Values for Magni Coating Fasteners (Ref 4150701)																	
SAE GRADE 5 BOLTS & GRADE 2 NUTS											SAE GRADE 8 (HEX HD) BOLTS & GRADE 8 NUTS*						
Size	TPI	Bolt Dia	Tensile Stress Area	Clamp Load	Torque (Dry) K=0.17		Torque (Loctite® 242™ or 271™ OR Vibra-TITE™ 111 or 140) K=0.16		Torque (Loctite® 262™ or Vibra-TITE™ 131) K=0.15		Clamp Load	Torque (Dry or Loctite® 263) K= 0.17		Torque (Loctite® 242™ or 271™ OR Vibra-TITE™ 111 or 140) K=.16		Torque (Loctite® 262™ or Vibra-TITE™ 131) K=0.15	
		In	Sq In	LB	IN-LB	[N.m]	IN-LB	[N.m]	IN-LB	[N.m]	LB	IN-LB	[N.m]	IN-LB	[N.m]	IN-LB	[N.m]
4	40	0.1120	0.00604	380	7	0.8											
	48	0.1120	0.00661	420	8	0.9											
6	32	0.1380	0.00909	580	14	1.5											
	40	0.1380	0.01015	610	14	1.6											
8	32	0.1640	0.01400	900	25	2.8											
	36	0.1640	0.01474	940	26	2.9					1320	37	4				
10	24	0.1900	0.01750	1120	36	4.1					1580	51	6				
	32	0.1900	0.02000	1285	42	4.7					1800	58	7				
1/4	20	0.2500	0.0318	2020	86	9.7	80	9			2860	122	14	114	13		
	28	0.2500	0.0364	2320	99	11.1	95	11			3280	139	16	131	15		
		In	Sq In	LB	FT-LB	[N.m]	FT-LB	[N.m]	FT-LB	[N.m]	LB	FT-LB	[N.m]	FT-LB	[N.m]	FT-LB	[N.m]
5/16	18	0.3125	0.0524	3340	15	20	14	19	15	20	4720	20	25	20	25	20	25
	24	0.3125	0.0580	3700	15	20	15	21	15	20	5220	25	35	20	25	20	25
3/8	16	0.3750	0.0775	4940	25	35	25	34	25	34	7000	35	50	35	50	35	50
	24	0.3750	0.0878	5600	30	40	28	38	25	34	7900	40	55	40	55	35	50
7/16	14	0.4375	0.1063	6800	40	55	40	54	35	48	9550	60	80	55	75	50	70
	20	0.4375	0.1187	7550	45	60	44	60	40	54	10700	65	90	60	80	60	80
1/2	13	0.5000	0.1419	9050	65	90	60	82	55	75	12750	90	120	85	115	80	110
	20	0.5000	0.1599	10700	75	100	71	97	65	88	14400	100	135	95	130	90	120
9/16	12	0.5625	0.1820	11600	90	120	87	118	80	109	16400	130	175	125	170	115	155
	18	0.5625	0.2030	12950	105	145	97	132	90	122	18250	145	195	135	185	130	175
5/8	11	0.6250	0.2260	14400	130	175	120	163	115	156	20350	180	245	170	230	160	220
	18	0.6250	0.2560	16300	145	195	136	185	125	170	23000	205	280	190	260	180	245
3/4	10	0.7500	0.3340	21300	225	305	213	290	200	272	30100	320	435	300	410	280	380
	16	0.7500	0.3730	23800	255	345	238	324	225	306	33600	355	485	335	455	315	430
7/8	9	0.8750	0.4620	29400	365	495	343	466	320	435	41600	515	700	485	660	455	620
	14	0.8750	0.5090	32400	400	545	378	514	355	483	45800	570	775	535	730	500	680
1	8	1.0000	0.6060	38600	545	740	515	700	480	653	51500	730	995	685	930	645	875
	12	1.0000	0.6630	42200	600	815	563	765	530	721	59700	845	1150	795	1080	745	1015
1 1/8	7	1.1250	0.7630	42300	675	920	635	863	595	809	68700	1095	1490	1030	1400	965	1310
	12	1.1250	0.8560	47500	755	1025	713	969	670	911	77000	1225	1665	1155	1570	1085	1475
1 1/4	7	1.2500	0.9690	53800	955	1300	897	1219	840	1142	87200	1545	2100	1455	1980	1365	1855
	12	1.2500	1.0730	59600	1055	1435	993	1351	930	1265	96600	1710	2325	1610	2190	1510	2055
1 3/8	6	1.3750	1.1550	64100	1250	1700	1175	1598	1100	1496	104000	2025	2755	1905	2590	1785	2430
	12	1.3750	1.3150	73000	1420	1930	1338	1820	1255	1707	118100	2300	3130	2165	2945	2030	2760
1 1/2	6	1.5000	1.4050	78000	1660	2260	1560	2122	1465	1992	126500	2690	3660	2530	3440	2370	3225
	12	1.5000	1.5800	87700	1865	2535	1754	2385	1645	2237	142200	3020	4105	2845	3870	2665	3625

NOTES: 1. THESE TORQUE VALUES DO NOT APPLY TO CADMIUM PLATED FASTENERS
2. ALL TORQUE VALUES ARE STATIC TORQUE MEASURED PER STANDARD AUDIT METHODS TOLERANCE = ±10%
3. * ASSEMBLY USES HARDENED WASHER

NO. 5000059 REV. K

Go to Discount-Equipment.com to order your parts

Figure 1-4. Torque Chart - Sheet 2 of 5 (SAE Fasteners)

SOCKET HEAD CAP SCREWS

Size	TPI	Bolt Dia	Tensile Stress Area	Magni Coating (Ref 4150701)*								Zinc Yellow Chromate Fasteners (Ref 4150707)*							
				Clamp Load See Note 4	Torque (Dry) K = .17		Torque (Loctite® 242™ or 271™ OR Vibra-TITE™ 111 or 140 OR Precoat 85®) K=0.16		Torque (Loctite® 262™ or Vibra-TITE™ 131) K=0.15		Clamp Load See Note 4	Torque (Dry) K = .20		Torque (Loctite® 242™ or 271™ OR Vibra-TITE™ 111 or 140 OR Precoat 85®) K=0.18		Torque (Loctite® 262™ or Vibra-TITE™ 131) K=0.15	
		In	Sq In	LB	IN-LB	[N.m]	IN-LB	[N.m]	IN-LB	[N.m]	LB	IN-LB	[N.m]	IN-LB	[N.m]	IN-LB	[N.m]
4	40	0.1120	0.00604														
	48	0.1120	0.00661														
6	32	0.1380	0.00909														
	40	0.1380	0.01015														
8	32	0.1640	0.01400														
	36	0.1640	0.01474														
10	24	0.1900	0.01750														
	32	0.1900	0.02000														
1/4	20	0.2500	0.0318	2860	122	14	114	13			2860	143	16	129	15		
	28	0.2500	0.0364	3280	139	16	131	15			3280	164	19	148	17		
		In	Sq In	LB	FT-LB	[N.m]	FT-LB	[N.m]	FT-LB	[N.m]	LB	FT-LB	[N.m]	FT-LB	[N.m]	FT-LB	[N.m]
5/16	18	0.3125	0.0524	4720	20	25	20	25	20	25	4720	25	35	20	25	20	25
	24	0.3125	0.0580	5220	25	35	20	25	20	25	5220	25	35	25	35	20	25
3/8	16	0.3750	0.0775	7000	35	50	35	50	35	50	7000	45	60	40	55	35	50
	24	0.3750	0.0878	7900	40	55	40	55	35	50	7900	50	70	45	60	35	50
7/16	14	0.4375	0.1063	9550	60	80	55	75	50	70	9550	70	95	65	90	50	70
	20	0.4375	0.1187	10700	65	90	60	80	60	80	10700	80	110	70	95	60	80
1/2	13	0.5000	0.1419	12750	90	120	85	115	80	110	12750	105	145	95	130	80	110
	20	0.5000	0.1599	14400	100	135	95	130	90	120	14400	120	165	110	150	90	120
9/16	12	0.5625	0.1820	16400	130	175	125	170	115	155	16400	155	210	140	190	115	155
	18	0.5625	0.2030	18250	145	195	135	185	130	175	18250	170	230	155	210	130	175
5/8	11	0.6250	0.2260	20350	180	245	170	230	160	220	20350	210	285	190	260	160	220
	18	0.6250	0.2560	23000	205	280	190	260	180	245	23000	240	325	215	290	180	245
3/4	10	0.7500	0.3340	30100	320	435	300		280	380	30100	375	510	340	460	280	380
	16	0.7500	0.3730	33600	355	485	335	455	315	430	33600	420	570	380	515	315	430
7/8	9	0.8750	0.4620	41600	515	700	485	660	455	620	41600	605	825	545	740	455	620
	14	0.8750	0.5090	45800	570	775	535	730	500	680	45800	670	910	600	815	500	680
1	8	1.0000	0.6060	51500	730	995	685	930	645	875	51500	860	1170	775	1055	645	875
	12	1.0000	0.6630	59700	845	1150	795	1080	745	1015	59700	995	1355	895	1215	745	1015
1 1/8	7	1.1250	0.7630	68700	1095	1490	1030	1400	965	1310	68700	1290	1755	1160	1580	965	1310
	12	1.1250	0.8560	77000	1225	1665	1155	1570	1085	1475	77000	1445	1965	1300	1770	1085	1475
1 1/4	7	1.2500	0.9690	87200	1545	2100	1455	1980	1365	1855	87200	1815	2470	1635	2225	1365	1855
	12	1.2500	1.0730	96600	1710	2325	1610	2190	1510	2055	96600	2015	2740	1810	2460	1510	2055
1 3/8	6	1.3750	1.1550	104000	2025	2755	1905	2590	1785	2430	104000	2385	3245	2145	2915	1785	2430
	12	1.3750	1.3150	118100	2300	3130	2165	2945	2030	2760	118100	2705	3680	2435	3310	2030	2760
1 1/2	6	1.5000	1.4050	126500	2690	3660	2530	3440	2370	3225	126500	3165	4305	2845	3870	2370	3225
	12	1.5000	1.5800	142200	3020	4105	2845	3870	2665	3625	142200	3555	4835	3200	4350	2665	3625

NOTES: 1. THESE TORQUE VALUES DO NOT APPLY TO CADMIUM PLATED FASTENERS
2. ALL TORQUE VALUES ARE STATIC TORQUE MEASURED PER STANDARD AUDIT METHODS TOLERANCE = ±10%
*3. ASSEMBLY USES HARDENED WASHER OR FASTENER IS PLACED AGAINST PLATED STEEL OR RAW ALUMINUM
4. CLAMP LOAD LISTED FOR SHCS IS SAME AS GRADE 8 OR CLASS 10.9 AND DOES NOT REPRESENT FULL STRENGTH CAPABILITY OF SHCS. IF HIGHER LOAD IS REQUIRED, ADDITIONAL TESTING IS REQUIRED.

NO. 5000059 REV. K

Go to Discount-Equipment.com to order our Parts

Figure 1-5. Torque Chart - Sheet 3 of 5 (SAE Fasteners)

			Values for Zinc Yellow Chromate Fasteners (Ref 4150707)								
			CLASS 8.8 METRIC (HEX/SOCKET HEAD) BOLTS CLASS 8 METRIC NUTS					CLASS 10.9 METRIC (HEX HEAD) BOLTS CLASS 10 METRIC NUTS CLASS 12.9 SOCKET HEAD CAP SCREWS M3 - M5*			
Size	PITCH	Tensile Stress Area	Clamp Load	Torque (Dry or Loctite® 263™)	Torque (Lub)	Torque (Loctite® 262™ OR Vibra-TITE™ 131)	Torque (Loctite® 242™ or 271™ OR Vibra-TITE™ 111 or 140)	Clamp Load	Torque (Dry or Loctite® 263™) K = 0.20	Torque (Lub OR Loctite® 242™ or 271™ OR Vibra-TITE™ 111 or 140) K= 0.18	Torque (Loctite® 262™ OR Vibra-TITE™ 131) K=0.15
		Sq mm	KN	[N.m]	[N.m]	[N.m]	[N.m]	KN	[N.m]	[N.m]	[N.m]
3	0.5	5.03	2.19	1.3	1.0	1.2	1.4	3.13			
3.5	0.6	6.78	2.95	2.1	1.6	1.9	2.3	4.22			
4	0.7	8.78	3.82	3.1	2.3	2.8	3.4	5.47			
5	0.8	14.20	6.18	6.2	4.6	5.6	6.8	8.85			
6	1	20.10	8.74	11	7.9	9.4	12	12.5			
7	1	28.90	12.6	18	13	16	19	18.0	25	23	19
8	1.25	36.60	15.9	26	19	23	28	22.8	37	33	27
10	1.5	58.00	25.2	50	38	45	55	36.1	70	65	55
12	1.75	84.30	36.7	88	66	79	97	52.5	125	115	95
14	2	115	50.0	140	105	126	154	71.6	200	180	150
16	2	157	68.3	219	164	197	241	97.8	315	280	235
18	2.5	192	83.5	301	226	271	331	119.5	430	385	325
20	2.5	245	106.5	426	320	383	469	152.5	610	550	460
22	2.5	303	132.0	581	436	523	639	189.0	830	750	625
24	3	353	153.5	737	553	663	811	222.0	1065	960	800
27	3	459	199.5	1080	810	970	1130	286.0	1545	1390	1160
30	3.5	561	244.0	1460	1100	1320	1530	349.5	2095	1885	1575
33	3.5	694	302.0	1990	1490	1790	2090	432.5	2855	2570	2140
36	4	817	355.5	2560	1920	2300	2690	509.0	3665	3300	2750
42	4.5	1120	487.0	4090	3070	3680	4290	698.0	5865	5275	4395

NOTES: 1. THESE TORQUE VALUES DO NOT APPLY TO CADMIUM PLATED FASTENERS
2. ALL TORQUE VALUES ARE STATIC TORQUE MEASURED PER STANDARD AUDIT METHODS TOLERANCE = ±10%
*3. ASSEMBLY USES HARDENED WASHER OR FASTENER IS PLACED AGAINST PLATED STEEL OR RAW ALUMINUM
4. CLAMP LOAD LISTED FOR SHCS IS SAME AS GRADE 8 OR CLASS 10.9 AND DOES NOT REPRESENT FULL STRENGTH CAPABILITY OF SHCS. IF HIGHER LOAD IS REQUIRED, ADDITIONAL TESTING IS REQUIRED.

NO. 5000059 REV. K

Figure 1-6. Torque Chart - Sheet 4 of 5 (Metric fasteners)

Go to DiscountEquipment.com to order your parts

Values for Magni Coated Fasteners (Ref 4150701)											
CLASS 8.8 METRIC (HEX/SOCKET HEAD) BOLTS CLASS 8 METRIC NUTS							CLASS 10.9 METRIC (HEX HEAD) BOLTS CLASS 10 METRIC NUTS CLASS 12.9 SOCKET HEAD CAP SCREWS M6 AND ABOVE*				
Size	PITCH	Tensile Stress Area	Clamp Load	Torque (Dry or Loctite® 263™) K=0.17	Torque (Loctite® 262™ OR Vibra-TITE™ 131) K=0.16	Torque (Loctite® 242™ or 271™ OR Vibra-TITE™ 111 or 140) K=0.15	Clamp Load	Torque (Dry or Loctite® 263™) K = 0.17	Torque (Lub OR Loctite® 242™ or 271™ OR Vibra-TITE™ 111 or 140) K= 0.16	Torque (Loctite® 262™ OR Vibra-TITE™ 131) K=0.15
		Sq mm	KN	[N.m]	[N.m]	[N.m]	KN	[N.m]	[N.m]	[N.m]
3	0.5	5.03	2.19	1.1	1.1	1.0	3.13			
3.5	0.6	6.78	2.95	1.8	1.7	1.5	4.22			
4	0.7	8.78	3.82	2.6	2.4	2.3	5.47			
5	0.8	14.20	6.18	5.3	4.9	4.6	8.85			
6	1	20.10	8.74	9	8.4	7.9	12.5	13	12	11
7	1	28.90	12.6	15	14	13	18.0	21	20	19
8	1.25	36.60	15.9	22	20	19	22.8	31	29	27
10	1.5	58.00	25.2	43	40	38	36.1	61	58	55
12	1.75	84.30	36.7	75	70	66	52.5	105	100	95
14	2	115	50.0	119	110	105	71.6	170	160	150
16	2	157	68.3	186	175	165	97.8	265	250	235
18	2.5	192	83.5	256	240	225	119.5	365	345	325
20	2.5	245	106.5	362	340	320	152.5	520	490	460
22	2.5	303	132.0	494	465	435	189.0	705	665	625
24	3	353	153.5	627	590	555	222.0	905	850	800
27	3	459	199.5	916	860	810	286.0	1315	1235	1160
30	3.5	561	244.0	1245	1170	1100	349.5	1780	1680	1575
33	3.5	694	302.0	1694	1595	1495	432.5	2425	2285	2140
36	4	817	355.5	2176	2050	1920	509.0	3115	2930	2750
42	4.5	1120	487.0	3477	3275	3070	698.0	4985	4690	4395

NOTES: 1. THESE TORQUE VALUES DO NOT APPLY TO CADMIUM PLATED FASTENERS
2. ALL TORQUE VALUES ARE STATIC TORQUE MEASURED PER STANDARD AUDIT METHODS TOLERANCE = ±10%
*3. ASSEMBLY USES HARDENED WASHER OR FASTENER IS PLACED AGAINST PLATED STEEL OR RAW ALUMINUM
4. CLAMP LOAD LISTED FOR SHCS IS SAME AS GRADE 8 OR CLASS 10.9 AND DOES NOT REPRESENT FULL STRENGTH CAPABILITY OF SHCS. IF HIGHER LOAD IS REQUIRED, ADDITIONAL TESTING IS REQUIRED.

NO. 5000059 REV. K

Go to Discount-Equipment.com to order your parts

Figure 1-7. Torque Chart - Sheet 5 of 5 (Metric Fasteners)

PARTS FINDER

Search Website by Part Number

Discount Equipment

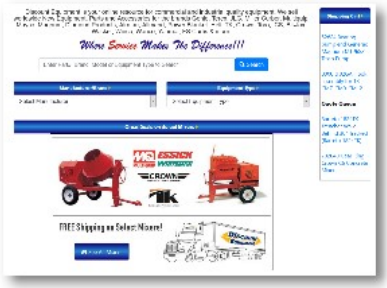

Search Manual Library For Parts Manual & Lookup Part Numbers – Purchase or Request Quote

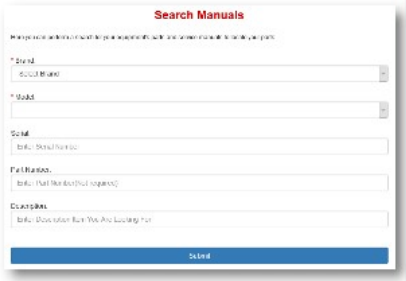

Can't Find Part or Manual? Request Help by Manufacturer, Model & Description

Discount-Equipment.com is your online resource for quality parts & equipment.
Florida: 561-964-4949 Outside Florida TOLL FREE: 877-690-3101

Go to Discount-Equipment.com to order your parts

Need parts?

Click on this link: http://www.discount-equipment.com/category/5443-parts/ and choose one of the options to help get the right parts and equipment you are looking for. Please have the machine model and serial number available in order to help us get you the correct parts. If you don't find the part on the website or on once of the online manuals, please fill out the request form and one of our experienced staff members will get back to you with a quote for the right part that your machine needs.

We sell worldwide for the brands: Genie, Terex, JLG, MultiQuip, Mikasa, Essick, Whiteman, Mayco, Toro Stone, Diamond Products, Generac Magnum, Airman, Haulotte, Barreto, Power Blanket, Nifty Lift, Atlas Copco, Chicago Pneumatic, Allmand, Miller Curber, Skyjack, Lull, Skytrak, Tsurumi, Husquvarna Target, , Stow, Wacker, Sakai, Mi-T- M, Sullair, Basic, Dynapac, MBW, Weber, Bartell, Bennar Newman, Haulotte, Ditch Runner, Menegotti, Morrison, Contec, Buddy, Crown, Edco, Wyco, Bomag, Laymor, Barreto, EZ Trench, Bil-Jax, F.S. Curtis, Gehl Pavers, Heli, Honda, ICS/PowerGrit, IHI, Partner, Imer, Clipper, MMD, Koshin, Rice, CH&E, General Equipment, ,AMida, Coleman, NAC, Gradall, Square Shooter, Kent, Stanley, Tamco, Toku, Hatz, Kohler, Robin, Wisconsin, Northrock, Oztec, Toker TK, Rol-Air, Small Line, Wanco, Yanmar

SECTION 2. GENERAL

2.1 MACHINE PREPARATION, INSPECTION, AND MAINTENANCE

General

This section provides the necessary information needed by those personnel that are responsible to place the machine in operation readiness and maintain its safe operating condition. For maximum service life and safe operation, ensure that all the necessary inspections and maintenance have been completed before placing the machine into service.

Preparation, Inspection, and Maintenance

It is important to establish and conform to a comprehensive inspection and preventive maintenance program. The following table outlines the periodic machine inspections and maintenance recommended by JLG Industries, Inc. Consult your national, regional, or local regulations for further requirements for aerial work platforms. The frequency of inspections and maintenance must be increased as environment, severity and frequency of usage requires.

Pre-Start Inspection

It is the User's or Operator's primary responsibility to perform a Pre-Start Inspection of the machine prior to use daily or at each change of operator. Reference the Operator's and Safety Manual for completion procedures for the Pre-Start Inspection. The Operator and Safety Manual must be read in its entirety and understood prior to performing the Pre-Start Inspection.

Pre-Delivery Inspection and Frequent Inspection

The Pre-Delivery Inspection and Frequent Inspection shall be performed by a qualified JLG equipment mechanic. JLG Industries, Inc. recognizes a qualified JLG equipment mechanic as a person who, by possession of a recognized degree, certificate, extensive knowledge, training, or experience, has successfully demonstrated the ability and proficiency to service, repair, and maintain the subject JLG product model.

The Pre-Delivery Inspection and Frequent Inspection procedures are performed in the same manner, but at different times. The Pre-Delivery Inspection shall be performed prior to each sale, lease, or rental delivery. The Frequent Inspection shall be accomplished for each machine in service for 3 months or 150 hours (whichever comes first); out of service for a period of more than 3 months; or when purchased used. The frequency of this inspection must be increased as environment, severity and frequency of usage requires.

Reference the JLG Pre-Delivery and Frequent Inspection Form and the Inspection and Preventative Maintenance Schedule for items requiring inspection during the performance of these inspections. Reference the appropriate areas of this manual for servicing and maintenance procedures.

Annual Machine Inspection

The Annual Machine Inspection must be performed by a Factory-Trained Service Technician on an annual basis, no later than thirteen (13) months from the date of the prior Annual Machine Inspection. JLG Industries, Inc. recognizes a Factory-Certified Service Technician as a person who has successfully completed the JLG Service Training School for the subject JLG product model. Reference the machine Service and Maintenance Manual and appropriate JLG inspection form for performance of this inspection.

Reference the JLG Annual Machine Inspection Form and the Inspection and Preventative Maintenance Schedule for items requiring inspection during the performance of this inspection. Reference the appropriate areas of this manual for servicing and maintenance procedures.

For the purpose of receiving safety-related bulletins, it is important that JLG Industries, Inc. has updated ownership information for each machine. When performing each Annual Machine Inspection, notify JLG Industries, Inc. of the current machine ownership.

Preventative Maintenance

In conjunction with the specified inspections, maintenance shall be performed by a qualified JLG equipment mechanic. JLG Industries, Inc. recognizes a qualified JLG equipment mechanic as a person who, by possession of a recognized degree, certificate, extensive knowledge, training, or experience, has successfully demonstrated the ability and proficiency to service, repair, and maintain the subject JLG product model.

Reference the Preventative Maintenance Schedule and the appropriate areas of this manual for servicing and maintenance procedures. The frequency of service and maintenance must be increased as environment, severity and frequency of usage requires.

Go to Discount Equipment.com to order your parts

Table 2-1. Inspection and Maintenance

Type	Frequency	Primary Responsibility	Service Qualification	Reference
Pre-Start Inspection	Before using each day; or whenever there's an Operator change.	User or Operator	User or Operator	Operator and Safety Manual
Pre-Delivery Inspection (See Note)	Before each sale, lease, or rental delivery.	Owner, Dealer, or User	Qualified JLG Mechanic	Service and Maintenance Manual and applicable JLG inspection form.
Frequent Inspection (See Note)	In service for 3 months or 150 hours, whichever comes first; or Out of service for a period of more than 3 months; or Purchased used.	Owner, Dealer, or User	Qualified JLG Mechanic	Service and Maintenance Manual and applicable JLG inspection form.
Annual Machine Inspection (See Note)	Annually, no later than 13 months from the date of prior inspection.	Owner, Dealer, or User	Factory Trained Service Technician (Recommended)	Service and Maintenance Manual and applicable JLG inspection form.
Preventative Maintenance	At intervals as specified in the Service and Maintenance Manual.	Owner, Dealer, or User	Qualified JLG Mechanic	Service and Maintenance Manual
NOTE: *Inspection forms are available from JLG. Use the Service and Maintenance Manual to perform inspections.*				

2.2 SERVICE AND GUIDELINES

General

The following information is provided to assist you in the use and application of servicing and maintenance procedures contained in this book.

Safety and Workmanship

Your safety, and that of others, is the first consideration when engaging in the maintenance of equipment. Always be conscious of weight. Never attempt to move heavy parts without the aid of a mechanical device. Do not allow heavy objects to rest in an unstable position. When raising a portion of the equipment, ensure that adequate support is provided.

Cleanliness

1. The most important single item in preserving the long service life of a machine is to keep dirt and foreign materials out of the vital components. Precautions have been taken to safeguard against this. Shields, covers, seals, and filters are provided to keep air, fuel, and oil supplies clean; however, these items must be maintained on a scheduled basis in order to function properly.
2. At any time when air, fuel, or oil lines are disconnected, clear adjacent areas as well as the openings and fittings themselves. As soon as a line or component is disconnected, cap or cover all openings to prevent entry of foreign matter.
3. Clean and inspect all parts during servicing or maintenance, and assure that all passages and openings are unobstructed. Cover all parts to keep them clean.

Be sure all parts are clean before they are installed. New parts should remain in their containers until they are ready to be used.

Components Removal and Installation

1. Use adjustable lifting devices, whenever possible, if mechanical assistance is required. All slings (chains, cables, etc.) should be parallel to each other and as near perpendicular as possible to top of part being lifted.
2. Should it be necessary to remove a component on an angle, keep in mind that the capacity of an eyebolt or similar bracket lessens, as the angle between the supporting structure and the component becomes less than 90 degrees.
3. If a part resists removal, check to see whether all nuts, bolts, cables, brackets, wiring, etc., have been removed and that no adjacent parts are interfering.

Component Disassembly and Reassembly

When disassembling or reassembling a component, complete the procedural steps in sequence. Do not partially disassemble or assemble one part, then start on another. Always recheck your work to assure that nothing has been overlooked. Do not make any adjustments, other than those recommended, without obtaining proper approval.

Pressure-Fit Parts

When assembling pressure-fit parts, use an anti-seize or molybdenum disulfide base compound to lubricate the mating surface.

Go to Discount-Equipment.com to order your parts

Bearings

1. When a bearing is removed, cover it to keep out dirt and abrasives. Clean bearings in nonflammable cleaning solvent and allow to drip dry. Compressed air can be used but do not spin the bearing.
2. Discard bearings if the races and balls (or rollers) are pitted, scored, or burned.
3. If bearing is found to be serviceable, apply a light coat of oil and wrap it in clean (waxed) paper. Do not unwrap reusable or new bearings until they are ready to install.
4. Lubricate new or used serviceable bearings before installation. When pressing a bearing into a retainer or bore, apply pressure to the outer race. If the bearing is to be installed on a shaft, apply pressure to the inner race.

Gaskets

Check that holes in gaskets align with openings in the mating parts. If it becomes necessary to hand-fabricate a gasket, use gasket material or stock of equivalent material and thickness. Be sure to cut holes in the right location, as blank gaskets can cause serious system damage.

Bolt Usage and Torque Application

1. Use bolts of proper length. A bolt which is too long will bottom before the head is tight against its related part. If a bolt is too short, there will not be enough thread area to engage and hold the part properly. When replacing bolts, use only those having the same specifications of the original, or one which is equivalent.
2. Unless specific torque requirements are given within the text, standard torque values should be used on heat-treated bolts, studs, and steel nuts, in accordance with recommended shop practices (See Torque Chart Section 1.).

Hydraulic Lines and Electrical Wiring

Clearly mark or tag hydraulic lines and electrical wiring, as well as their receptacles, when disconnecting or removing them from the unit. This will assure that they are correctly reinstalled.

Hydraulic System

1. Keep the system clean. If evidence of metal or rubber particles are found in the hydraulic system, drain and flush the entire system.
2. Disassemble and reassemble parts on clean work surface. Clean all metal parts with non-flammable cleaning solvent. Lubricate components, as required, to aid assembly.

Lubrication

Service applicable components with the amount, type, and grade of lubricant recommended in this manual, at the specified intervals. When recommended lubricants are not available, consult your local supplier for an equivalent that meets or exceeds the specifications listed.

Battery

Clean battery, using a non-metallic brush and a solution of baking soda and water. Rinse with clean water. After cleaning, thoroughly dry battery and coat terminals with an anti corrosion compound.

Lubrication and Servicing

Components and assemblies requiring lubrication and servicing are shown in the Lubrication Chart in Section 1.

Go to Discount-Equipment.com to order your parts

2.3 LUBRICATION AND INFORMATION

Hydraulic System

1. The primary enemy of a hydraulic system is contamination. Contaminants enter the system by various means, e.g., using inadequate hydraulic oil, allowing moisture, grease, filings, sealing components, sand, etc., to enter when performing maintenance, or by permitting the pump to cavitate due to insufficient system warm-up or leaks in the pump supply (suction) lines.

2. The design and manufacturing tolerances of the component working parts are very close, therefore, even the smallest amount of dirt or foreign matter entering a system can cause wear or damage to the components and generally results in faulty operation. Every precaution must be taken to keep hydraulic oil clean, including reserve oil in storage. Hydraulic system filters should be checked, cleaned, and/or replaced as necessary, at the specified intervals required in the Lubrication Chart in Section 1. Always examine filters for evidence of metal particles.

3. Cloudy oils indicate a high moisture content which permits organic growth, resulting in oxidation or corrosion. If this condition occurs, the system must be drained, flushed, and refilled with clean oil.

4. It is not advisable to mix oils of different brands or types, as they may not contain the same required additives or be of comparable viscosities. Good grade mineral oils, with viscosities suited to the ambient temperatures in which the machine is operating, are recommended for use.

NOTE: *Metal particles may appear in the oil or filters of new machines due to the wear-in of meshing components.*

Hydraulic Oil

1. Refer to Section 1 for recommendations for viscosity ranges.

2. JLG recommends Mobilfluid 424 hydraulic oil, which has an SAE viscosity of 10W-30 and a viscosity index of 152.

NOTE: *Start-up of hydraulic system with oil temperatures below -15 degrees F (-26 degrees C) is not recommended. If it is necessary to start the system in a sub-zero environment, it will be necessary to heat the oil with a low density, 100VAC heater to a minimum temperature of -15 degrees F (-26 degrees C).*

3. The only exception to the above is to drain and fill the system with Mobil DTE 13 oil or its equivalent. This will allow start up at temperatures down to -20 degrees F (-29 degrees C). However, use of this oil will give poor performance at temperatures above 120 degrees F (49 degrees C). Systems using DTE 13 oil should not be operated at temperatures above 200 degrees F (94 degrees C) under any condition.

Changing Hydraulic Oil

1. Filter elements must be changed after the first 50 hours of operation and every 300 hours thereafter. If it is necessary to change the oil, use only those oils meeting or exceeding the specifications appearing in this manual. If unable to obtain the same type of oil supplied with the machine, consult local supplier for assistance in selecting the proper equivalent. Avoid mixing petroleum and synthetic base oils.

2. Use every precaution to keep the hydraulic oil clean. If the oil must be poured from the original container into another, be sure to clean all possible contaminants from the service container. Always clean the mesh element of the filter and replace the cartridge any time the system oil is changed.

3. While the unit is shut down, a good preventive maintenance measure is to make a thorough inspection of all hydraulic components, lines, fittings, etc., as well as a functional check of each system, before placing the machine back in service.

Lubrication Specifications

Specified lubricants, as recommended by the component manufacturers, are always the best choice, however, multi-purpose greases usually have the qualities which meet a variety of single purpose grease requirements. Should any question arise, regarding the use of greases in maintenance stock, consult your local supplier for evaluation. Refer to Section 1 for an explanation of the lubricant key designations appearing in the Lubrication Chart.

Go to Discount-Equipment.com to order your parts

2.4 CYLINDER DRIFT TEST

Theory

When a hydraulic cylinder is supporting a load, cylinder drift may occur as a result of any of the circumstances below:

- Normal leakage of load holding valves or malfunction of load holding valves. See Cylinder Leakage Test and Table 2-2, Cylinder Drift below for evaluation.
- Damaged or worn piston seals.
- Normal thermal expansion or contraction of the hydraulic oil within cylinders (See Cylinder Thermal Drift below).

The first two circumstances may result in cylinder movement due to oil leaking out of the cylinder externally or by leaking back to tank or due to oil leaking internally from one cylinder chamber to the other.

Thermal expansion or contraction of oil in hydraulic cylinders is a normal occurrence and does not result in oil leaking out of the cylinder or leaking internally from one cylinder chamber to the other. Thermal expansion or contraction is the tendency for materials to change size in response to a change in temperature.

Cylinder Leakage Test

Cylinder oil must be at stabilized ambient temperature before beginning this test.

Measure drift at cylinder rod with a calibrated dial indicator.

In an area free of obstructions, cylinder must have load applied and appropriately positioned to detect drift.

Cylinder leakage is acceptable if it passes this test.

Table 2-2. Cylinder Drift

Cylinder Bore Diameter		Max. Acceptable Drift in 10 Minutes	
inches	mm	inches	mm
3	76.2	0.026	0.66
3.5	89	0.019	0.48
4	101.6	0.015	0.38
5	127	0.009	0.22
6	152.4	0.006	0.15
7	177.8	0.005	0.13
8	203.2	0.004	0.10
9	228.6	0.003	0.08

NOTE: *This information is based on 6 drops per minute cylinder leakage.*

Cylinder Thermal Drift

The oil in all hydraulic cylinders will expand or contract due to thermal effects over time and may result in changes to the boom and/or platform position while the machine is stationary. These effects occur as the cylinder oil changes temperature, usually from a higher oil temperature as it cools and approaches the ambient air temperature. Results of these effects are related to several factors including cylinder length and change in temperature over the time the cylinder remains stationary.

Go to Discount-Equipment.com to order your parts

2.5 PINS AND COMPOSITE BEARING REPAIR GUIDELINES

Filament wound bearings.

1. Pinned joints should be disassembled and inspected if the following occurs:
   a. Excessive sloppiness in joints.
   b. Noise originating from the joint during operation.
2. Filament wound bearings should be replaced if any of the following is observed:
   a. Frayed or separated fibers on the liner surface.
   b. Cracked or damaged liner backing.
   c. Bearings that have moved or spun in their housing.
   d. Debris embedded in liner surface.
3. Pins should be replaced if any of the following is observed (pin should be properly cleaned prior to inspection):
   a. Detectable wear in the bearing area.
   b. Flaking, pealing, scoring, or scratches on the pin surface.
   c. Rusting of the pin in the bearing area.
4. Re-assembly of pinned joints using filament wound bearings.
   a. Housing should be blown out to remove all dirt and debris. Bearings and bearing housings must be free of all contamination.
   b. Bearing/pins should be cleaned with a solvent to remove all grease and oil. Filament wound bearing are a dry joint and should not be lubricated unless otherwise instructed (i.e. sheave pins).
   c. Pins should be inspected to ensure it is free of burrs, nicks, and scratches which would damage the bearing during installation and operation.

2.6 WELDING ON JLG EQUIPMENT

NOTE: *This instruction applies to repairs, or modifications to the machine and to welding performed from the machine on an external structure, or component.*

Do the Following When Welding on JLG Equipment

- Disconnect the battery.
- Disconnect the moment pin connection (where fitted).
- Ground only to structure being welded.

Do NOT Do the Following When Welding on JLG Equipment

- Ground on frame and weld on any other area than the chassis.
- Ground on turntable and weld on any other area than the turntable.
- Ground on the platform/support and weld on any other area than the platform/support.
- Ground on a specific boom section and weld on any other area than that specific boom section.
- Allow pins, wear pads, wire ropes, bearings, gearing, seals, valves, electrical wiring, or hoses to be between the grounding position and the welded area.

NOTICE

FAILURE TO COMPLY WITH THE ABOVE REQUIREMENTS MAY RESULT IN COMPONENT DAMAGE (I.E. ELECTRONIC MODULES, SWING BEARING, COLLECTOR RING, BOOM WIRE ROPES ETC.).

Go to Discount Equipment.com to order your parts

Table 2-3. Inspection and Preventive Maintenance Schedule

AREA	INTERVAL		
	Pre-Delivery[1] or Frequent[2] Inspection	Annual[3] (Yearly) Inspection	Every 2 Years
Boom Assembly			
Boom Weldments	1,2,4	1,2,4	
Hose/Cable Carrier Installations	1,2,9,12	1,2,9,12	
Pivot Pins and Pin Retainers	1,2	1,2	
Sheaves, Sheave Pins	1,2	1,2	
Bearings	1,2	1,2	
Wear Pads	1,2	1,2	
Covers or Shields	1,2	1,2	
Extend/Retract Chain or Cable Systems	1,2,3	1,2,3	
Boom Assembly	1,2,3,4,5	1,2,3,4,5,7,9,14	
Platform Assembly			
Platform		1,2	
Railing	1	1,2	
Gate	1,5	1,5	
Floor	1	1,2	
Rotator	5,9,15	5,9,15	
Lanyard Anchorage Point	1,2,10	1,2,10	
Turntable Assembly			
Swing Bearing	1,2,14	1,2,3,13,14	
Oil Coupling	9	9	
Swing Drive System	11	11	
Turntable Lock	1,2,5	1,2,5	
Hood, Hood Props, Hood Latches	5	1,2,5	
Chassis Assembly			
Tires	16,17,18	16,17,18	
Wheel Nuts/Bolts	15	15	
Wheel Bearings			14,24
Oscillating Axle/Lockout Cylinder Systems	5,8	5,8	
Extendable Axle Systems	5,8	5,8	
Steer Components	1,2	1,2	
Spindle Thrust Bearing/Washers	1,2	1,2	
Drive Hubs	11	11	

Go to Discount-Equipment.com to order your parts

Table 2-3. Inspection and Preventive Maintenance Schedule

AREA	INTERVAL		
	Pre-Delivery[1] or Frequent[2] Inspection	Annual[3] (Yearly) Inspection	Every 2 Years
Functions/Controls			
Platform Controls	5,6	6	
Ground Controls	5,6	6	
Function Control Locks, Guards, or Detents	1,5	5	
Footswitch	5	5	
Emergency Stop Switches (Ground & Platform)	5	5	
Function Limit or Cutout Switch Systems	5	5	
Drive Brakes	5	5	
Swing Brakes	5	5	
Auxiliary Power	5	5	
Power System			
Engine Idle, Throttle, and RPM	3	3	
Engine Fluids (Oil, Coolant, Fuel)	9,11	11	
Air/Fuel Filter	1,7	7	
Exhaust System	1,9	9	
Batteries	1,9	19	
Battery Fluid	11	11	
Battery Charger	5	5	
Fuel Reservoir, Cap, and Breather	1,2,5	1,5	
Hydraulic/Electric System			
Hydraulic Pumps	1,2,9	1,2,9	
Hydraulic Cylinders	1,2,7,9	1,2,9	
Cylinder Attachment Pins and Pin Retainers	1,2,9	1,2	
Hydraulic Hoses, Lines, and Fittings	1,2,9,12	1,2,9,12	
Hydraulic Reservoir, Cap, and Breather	1,2,5,9	1,5	24
Hydraulic Filter	1,7,9	7	
Hydraulic Fluid	7,11	7,11	
Electrical Connections	1,20	20	
Instruments, Gauges, Switches, Lights, Horn	1	5,23	
General			
Operators and Safety Manuals in Storage Box	21	21	
ANSI and AEM Manuals/Handbooks Installed (ANSI Markets Only)		21	
Capacity Decals Installed, Secure, Legible	21	21	
All Decals/Placards Installed, Secure, Legible	21	21	

Go to Discount-Equipment.com to order your parts

Table 2-3. Inspection and Preventive Maintenance Schedule

AREA	INTERVAL		
	Pre-Delivery[1] or Frequent[2] Inspection	Annual[3] (Yearly) Inspection	Every 2 Years
Annual Machine Inspection Due		21	
No Unauthorized Modifications or Additions	21	21	
All Relevant Safety Publications Incorporated	21	21	
General Structural Condition and Welds	2,4	2,4	
All Fasteners, Pins, Shields, and Covers	1,2	1,2	
Grease and Lubricate to Specifications	22	22	
Function Test of All Systems	21	21, 22	
Paint and Appearance	7	7	
Stamp Inspection Date on Frame		22	
Notify JLG of Machine Ownership		22	

Footnotes:

[1] Prior to each sale, lease, or delivery

[2] In service for 3 months or 150 Hours; or Out of service for 3 months or more; or Purchased used

[3] Annually, no later than 13 months from the date of the prior inspection

Performance Codes:

1 - Check for proper and secure installation
2 - Visual inspection for damage, cracks, distortion or excessive wear
3 - Check for proper adjustment
4 - Check for cracked or broken welds
5 - Operates Properly
6 - Returns to neutral or "off" position when released
7 - Clean and free of debris
8 - Interlocks function properly
9 - Check for signs of leakage
10 - Decals installed and legible
11 - Check for proper fluid level
12 - Check for chafing and proper routing
13 - Check for proper tolerances
14 - Properly lubricated
15 - Torqued to proper specification
16 - No gouges, excessive wear, or cords showing
17 - Properly inflated and seated around rim
18 - Proper and authorized components
19 - Fully charged
20 - No loose connections, corrosion, or abrasions
21 - Verify
22 - Perform
23 - Sealed Properly
24 - Drain, Clean, Refill

Go to Discount-Equipment.com to order your parts

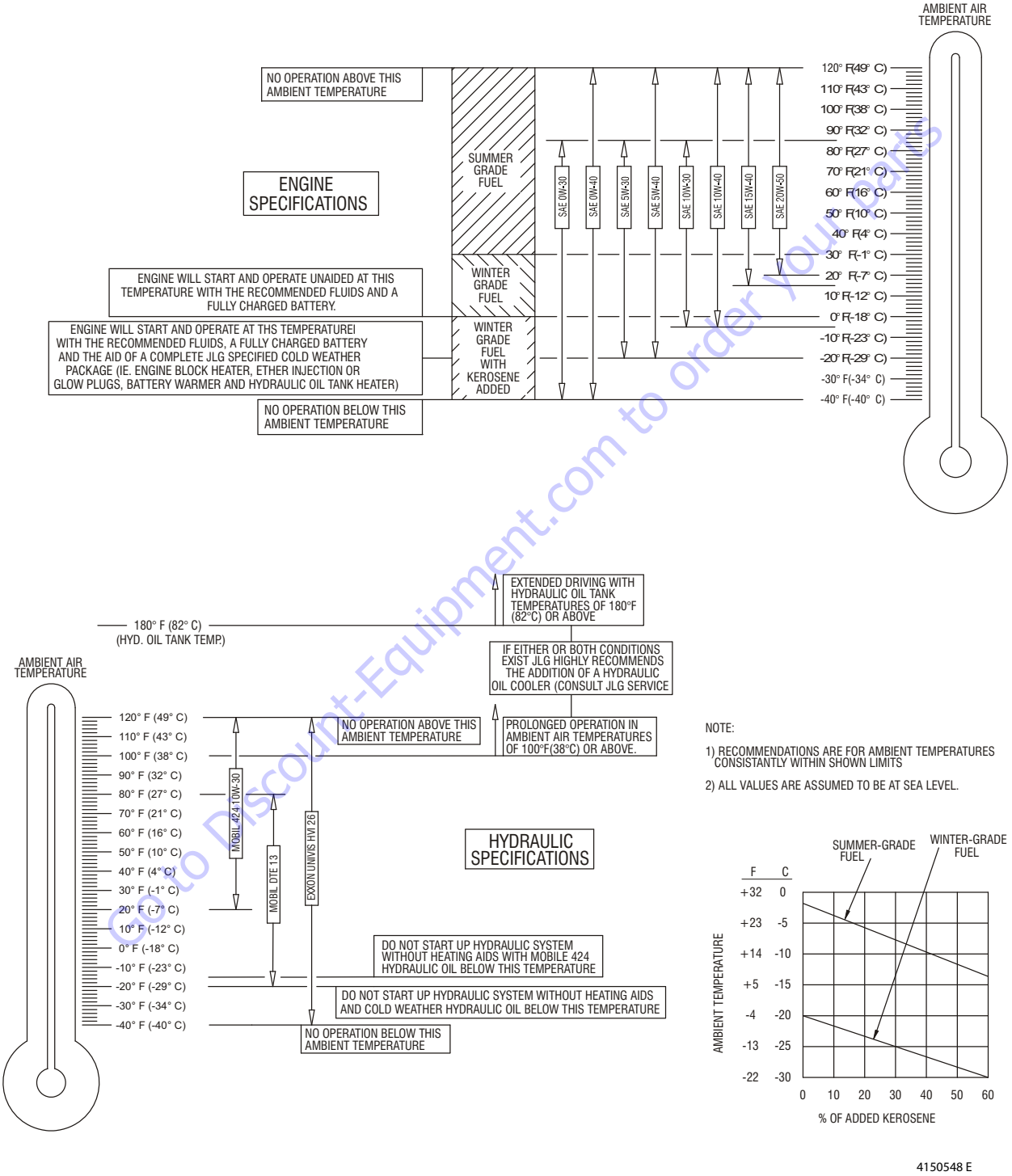

Go to Discount-Equipment.com to order your parts

Figure 2-1. Engine Operating Temperature Specifications - Deutz

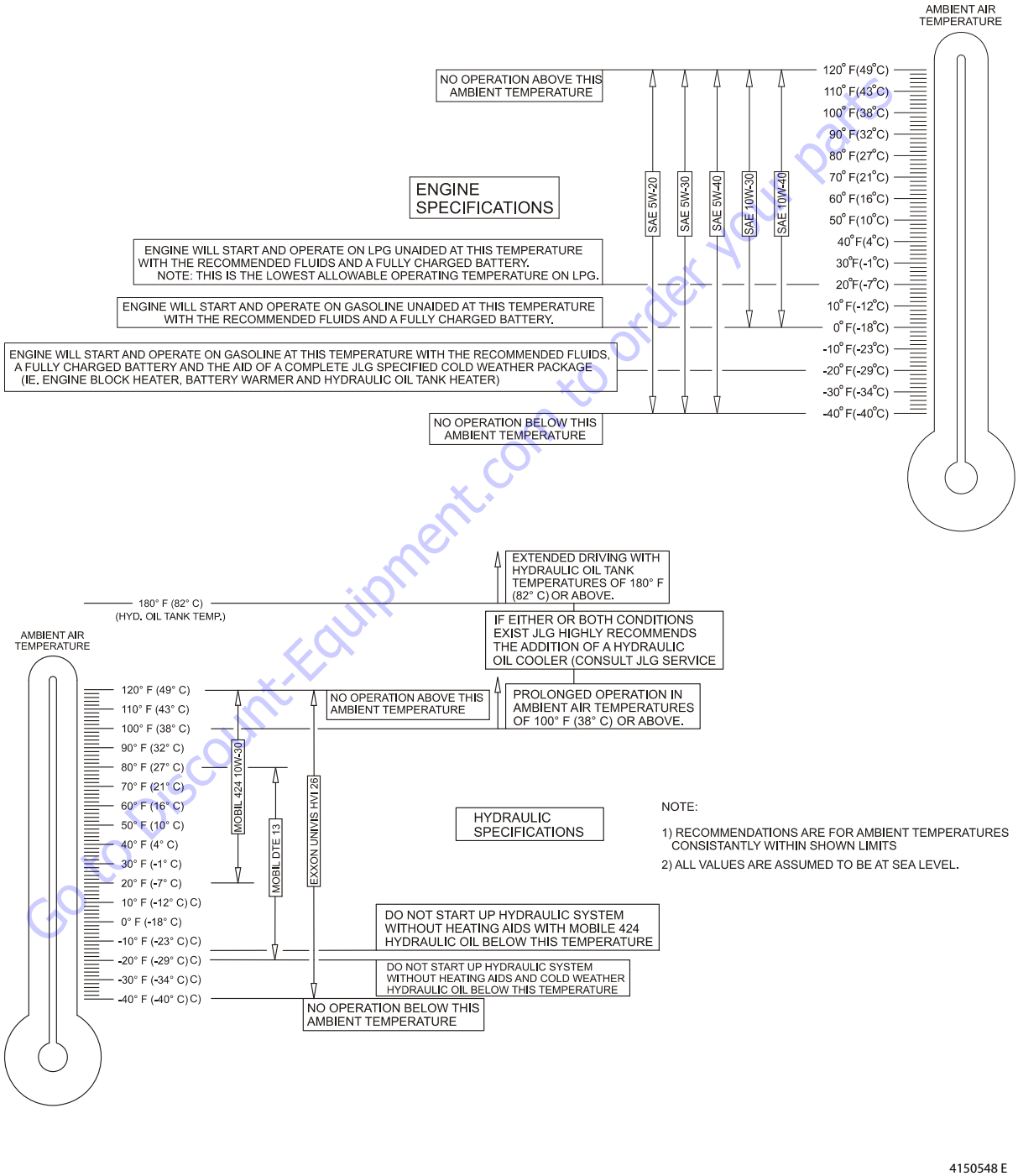

Go to Discount-Equipment.com to order your parts

Figure 2-2. Engine Operating Temperature Specifications - Ford

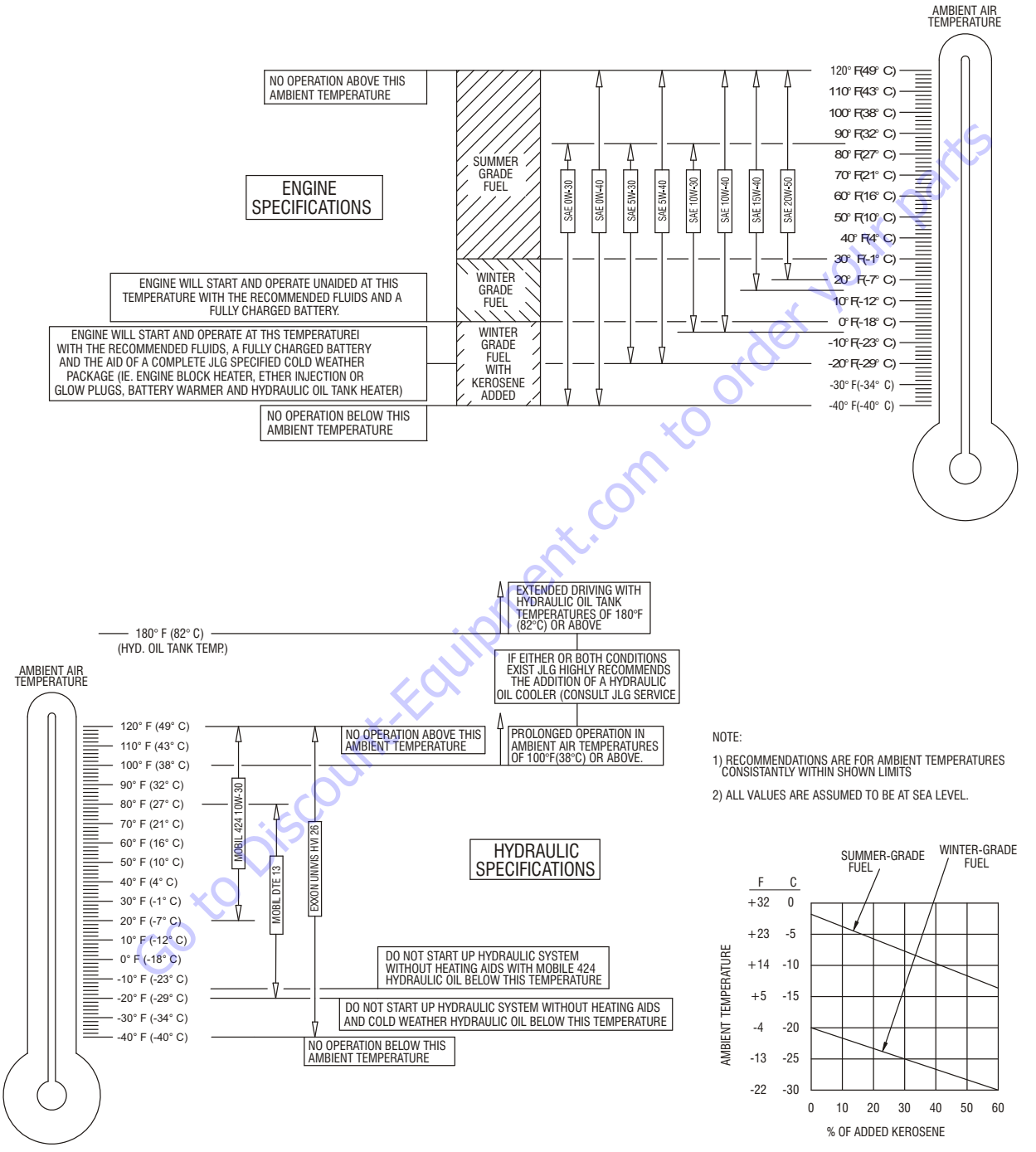

Figure 2-3. Engine Operating Temperature Specifications - GM

Go to Discount-Equipment.com to order your parts

PARTS FINDER

Search Website by Part Number

Discount Equipment

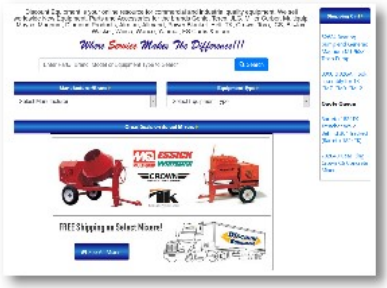

Search Manual Library For Parts Manual & Lookup Part Numbers – Purchase or Request Quote

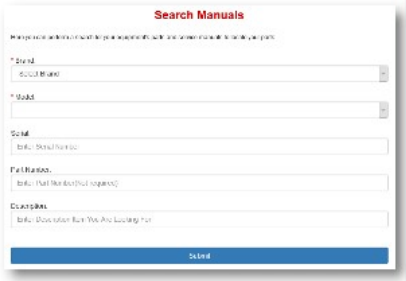

Can't Find Part or Manual? Request Help by Manufacturer, Model & Description

Discount-Equipment.com is your online resource for quality parts & equipment.
Florida: 561-964-4949 Outside Florida TOLL FREE: 877-690-3101

Go to Discount-Equipment.com to order your parts

Need parts?

Click on this link: http://www.discount-equipment.com/category/5443-parts/ and choose one of the options to help get the right parts and equipment you are looking for. Please have the machine model and serial number available in order to help us get you the correct parts. If you don't find the part on the website or on once of the online manuals, please fill out the request form and one of our experienced staff members will get back to you with a quote for the right part that your machine needs.

We sell worldwide for the brands: Genie, Terex, JLG, MultiQuip, Mikasa, Essick, Whiteman, Mayco, Toro Stone, Diamond Products, Generac Magnum, Airman, Haulotte, Barreto, Power Blanket, Nifty Lift, Atlas Copco, Chicago Pneumatic, Allmand, Miller Curber, Skyjack, Lull, Skytrak, Tsurumi, Husquvarna Target, , Stow, Wacker, Sakai, Mi-T- M, Sullair, Basic, Dynapac, MBW, Weber, Bartell, Bennar Newman, Haulotte, Ditch Runner, Menegotti, Morrison, Contec, Buddy, Crown, Edco, Wyco, Bomag, Laymor, Barreto, EZ Trench, Bil-Jax, F.S. Curtis, Gehl Pavers, Heli, Honda, ICS/PowerGrit, IHI, Partner, Imer, Clipper, MMD, Koshin, Rice, CH&E, General Equipment, ,AMida, Coleman, NAC, Gradall, Square Shooter, Kent, Stanley, Tamco, Toku, Hatz, Kohler, Robin, Wisconsin, Northrock, Oztec, Toker TK, Rol-Air, Small Line, Wanco, Yanmar

SECTION 3. CHASSIS & TURNTABLE

3.1 TIRES & WHEELS

Tire Inflation

The air pressure for pneumatic tires must be equal to the air pressure that is stenciled on the side of the JLG product or rim decal for safe and proper operational characteristics.

Tire Damage

For pneumatic tires, JLG Industries, Inc. recommends that when any cut, rip, or tear is discovered that exposes sidewall or tread area cords in the tire, measures must be taken to remove the JLG product from service immediately. Arrangements must be made for replacement of the tire or tire assembly.

For polyurethane foam filled tires, JLG Industries, Inc. recommends that when any of the following are discovered, measures must be taken to remove the JLG product from service immediately and arrangements must be made for replacement of the tire or tire assembly.

- a smooth, even cut through the cord plies which exceeds 3 in. (7.5 cm) in total length
- any tears or rips (ragged edges) in the cord plies which exceeds 1 in. (2.5 cm) in any direction
- any punctures which exceed 1 in. in diameter
- any damage to the bead area09 cords of the tire

If a tire is damaged but is within the above noted criteria, the tire must be inspected on a daily basis to insure the damage has not propagated beyond the allowable criteria.

Tire Replacement

JLG recommends a replacement tire be the same size, ply and brand as originally installed on the machine. Please refer to the JLG Parts Manual for the part number of the approved tires for a particular machine model. If not using a JLG approved replacement tire, we recommend that replacement tires have the following characteristics:

- Equal or greater ply/load rating and size of original
- Tire tread contact width equal or greater than original
- Wheel diameter, width, and offset dimensions equal to the original
- Approved for the application by the tire manufacturer (including inflation pressure and maximum tire load)

Unless specifically approved by JLG Industries Inc. do not replace a foam filled or ballast filled tire assembly with a pneumatic tire. When selecting and installing a replacement tire, ensure that all tires are inflated to the pressure recommended by JLG. Due to size variations between tire brands, both tires on the same axle should be the same.

Wheel Replacement

The rims installed on each product model have been designed for stability requirements which consist of track width, tire pressure, and load capacity. Size changes such as rim width, center piece location, larger or smaller diameter, etc., without written factory recommendations, may result in an unsafe condition regarding stability.

Wheel Installation

It is extremely important to apply and maintain proper wheel mounting torque.

⚠ WARNING

WHEEL NUTS MUST BE INSTALLED AND MAINTAINED AT THE PROPER TORQUE TO PREVENT LOOSE WHEELS, BROKEN STUDS, AND POSSIBLE DANGEROUS SEPARATION OF WHEEL FROM THE AXLE. BE SURE TO USE ONLY THE NUTS MATCHED TO THE CONE ANGLE OF THE WHEEL.

Tighten the lug nuts to the proper torque to prevent wheels from coming loose. Use a torque wrench to tighten the fasteners. If you do not have a torque wrench, tighten the fasteners with a lug wrench, then immediately have a service garage or dealer tighten the lug nuts to the proper torque. Over-tightening will result in breaking the studs or permanently deforming the mounting stud holes in the wheels. The proper procedure for attaching wheels is as follows:

1. Start all nuts by hand to prevent cross threading. DO NOT use a lubricant on threads or nuts.
2. Tighten nuts in the following sequence:

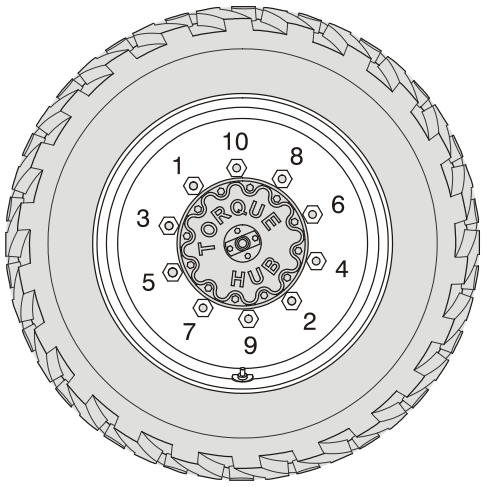

Go to Discount-Equipment.com to order your parts

3. The tightening of the nuts should be done in stages. Following the recommended sequence, tighten nuts per wheel torque chart.

Table 3-1. Wheel Torque Chart

TORQUE SEQUENCE		
1st Stage	2nd Stage	3rd Stage
70 ft. lbs. (95 Nm)	170 ft. lbs. (225 Nm)	300 ft. lbs. (405 Nm)

4. Wheel nuts should be torqued after first 50 hours of operation and after each wheel removal. Check torque every 3 months or 150 hours of operation.

3.2 EMERGENCY TOWING

⚠ WARNING

RUNAWAY VEHICLE/MACHINE HAZARD. MACHINE HAS NO TOWING BRAKES. TOWING VEHICLE MUST BE ABLE TO CONTROL MACHINE AT ALL TIMES. ON-HIGHWAY TOWING NOT PERMITTED. FAILURE TO FOLLOW INSTRUCTIONS COULD CAUSE SERIOUS INJURY OR DEATH.

MAXIMUM TOWING SPEED 5 M.P.H. (8 K.M.H.)

MAXIMUM TOWING GRADE 25%.

⚠ CAUTION

DO NOT TOW MACHINE WITH ENGINE OPERATING OR DRIVE HUBS ENGAGED.

1. Retract, lower and position boom in travel position; lock turntable.
2. Disconnect drive hubs by inverting disconnect cap.

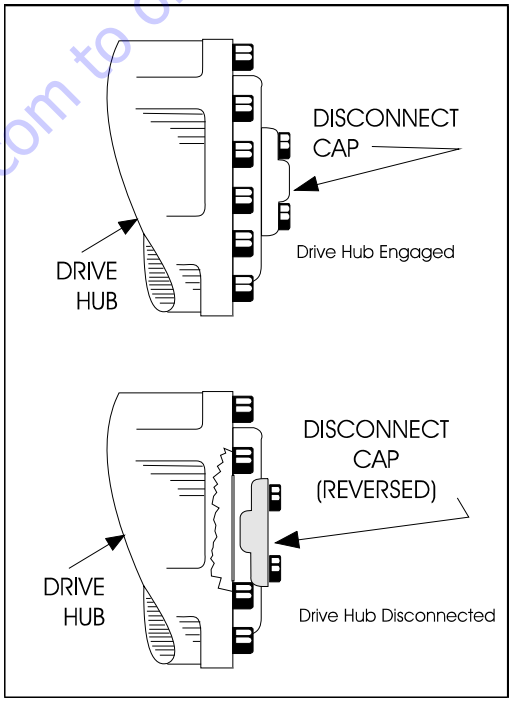

Figure 3-1. Drive Disconnect Hub

3. Reconnect the drive hubs by inverting the disconnect cap when towing is complete.

Go to Discount-Equipment.com to order your parts

This page left blank intentionally.

Go to Discount-Equipment.com to order your parts

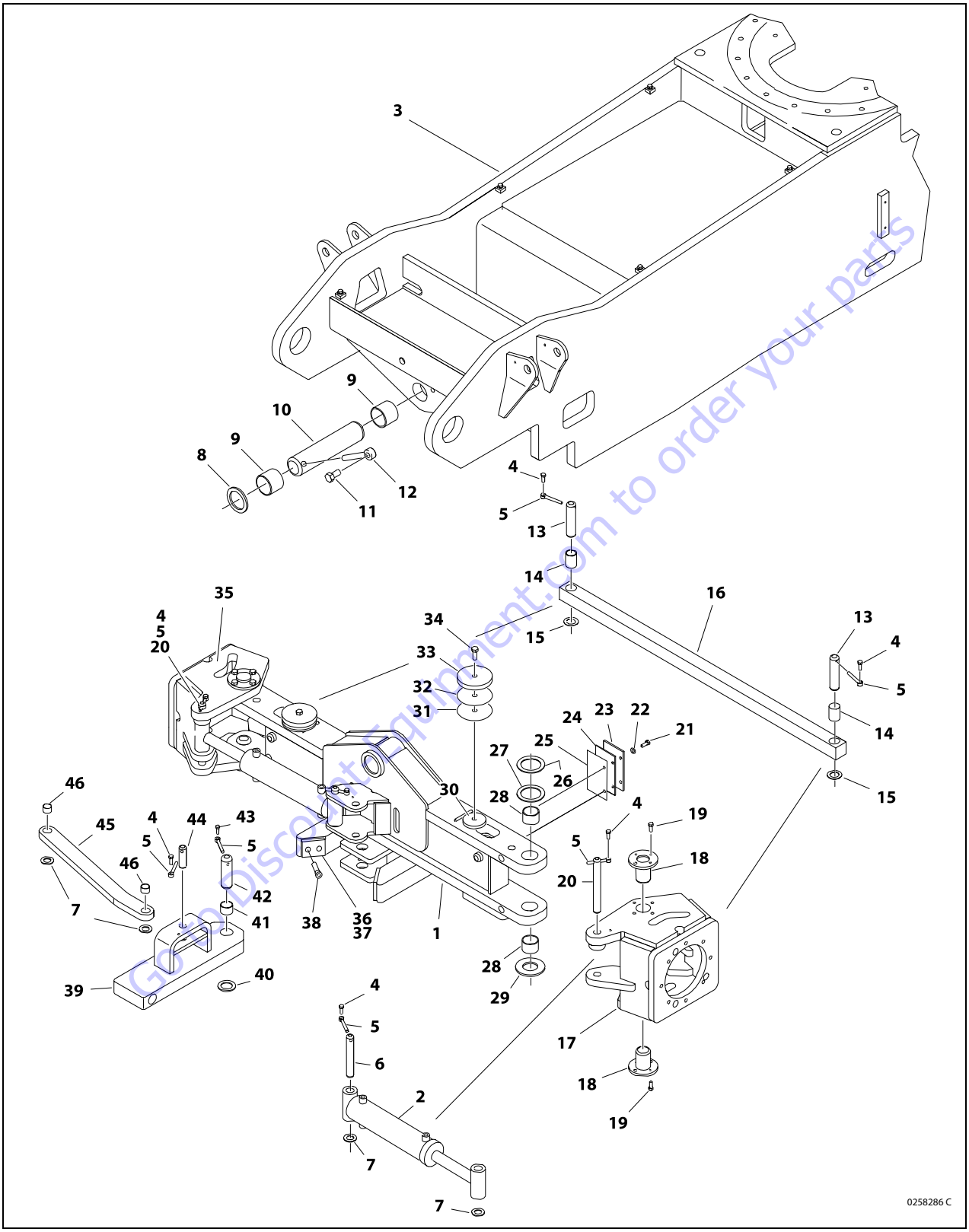

GovDiscountEquipment.com to order your parts

Figure 3-2. Axle and Steering Installation - Sheet 1 of 2

1. Axle Weldment
2. Steer Cylinder Assembly
3. Frame Weldment
4. Bolt
5. Keeper Pin
6. Attach Pin
7. Washer
8. Washer
9. Bushing
10. Pivot Pin
11. Bolt
12. Keeper Pin
13. Tie Rod Pin
14. Bearing
15. Washer
16. Tie Rod
17. Spindle Weldment (Left Side)
18. King Pin
19. Bolt
20. Steer Pin
21. Bolt
22. Washer
23. Wear Shim
24. Wear Shim
25. Wear Shim
26. Washer
27. Washer
28. Bushing
29. Washer
30. Stop Plate
31. Shim
32. Shim
33. Stop Plate
34. Bolt
35. Spindle Weldment (Right Side)
36. Stop Pad
37. Shim
38. Screw
39. Pivot Bar
40. Washer
41. Bushing
42. Pin
43. Bolt
44. Pin
45. Link
46. Bushing

Figure 3-3. Axle and Steering Installation - Sheet 2 of 2

Go to Discount-Equipment.com to order your parts

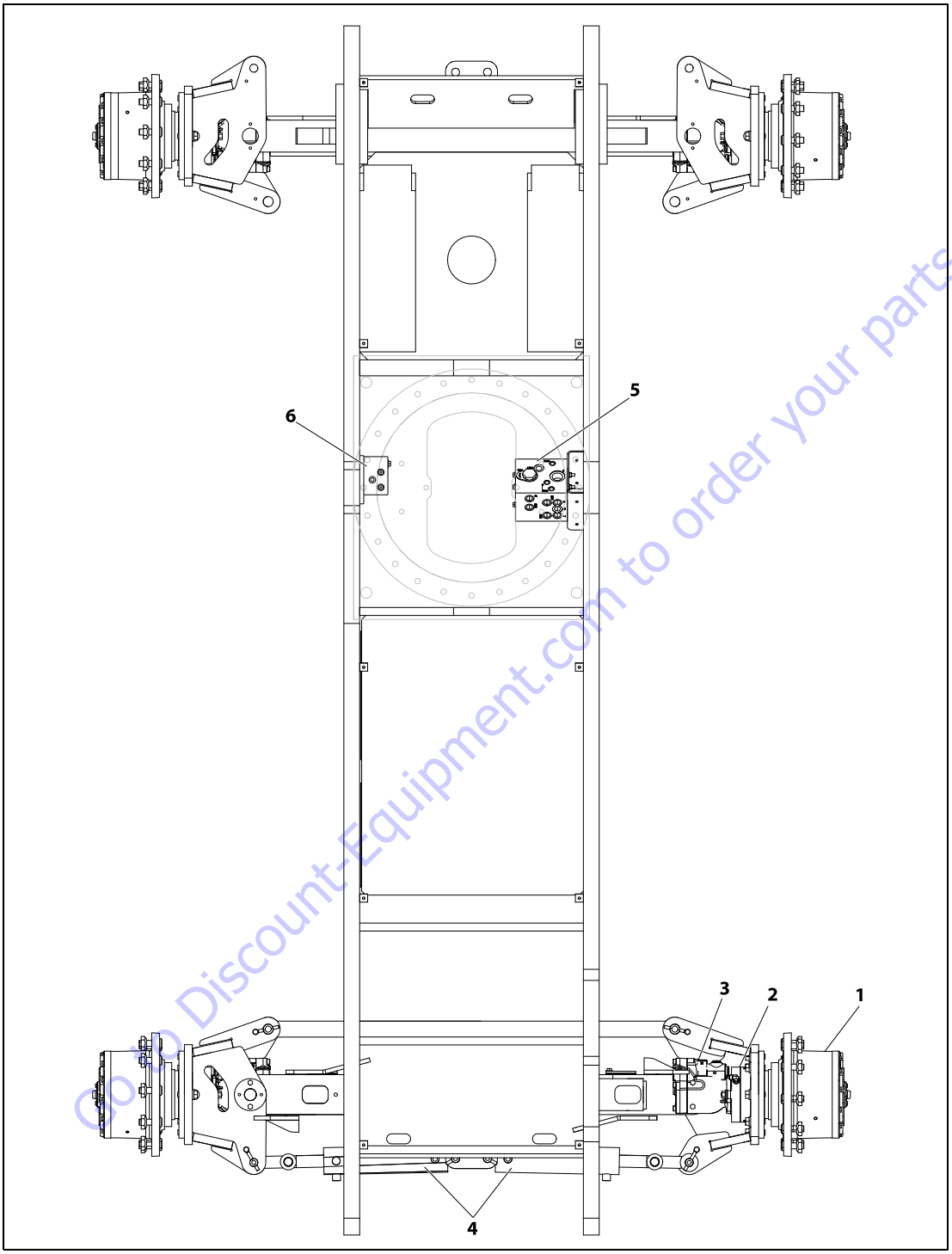

1. Drive Hub
2. Drive Brake
3. Drive Motor
4. Steer Cylinders
5. Flow Divider Valve 2WD
6. Flow Divider Valve 4WD

Figure 3-4. Chassis Component Location

Go To Discount-Equipment.com to order your parts

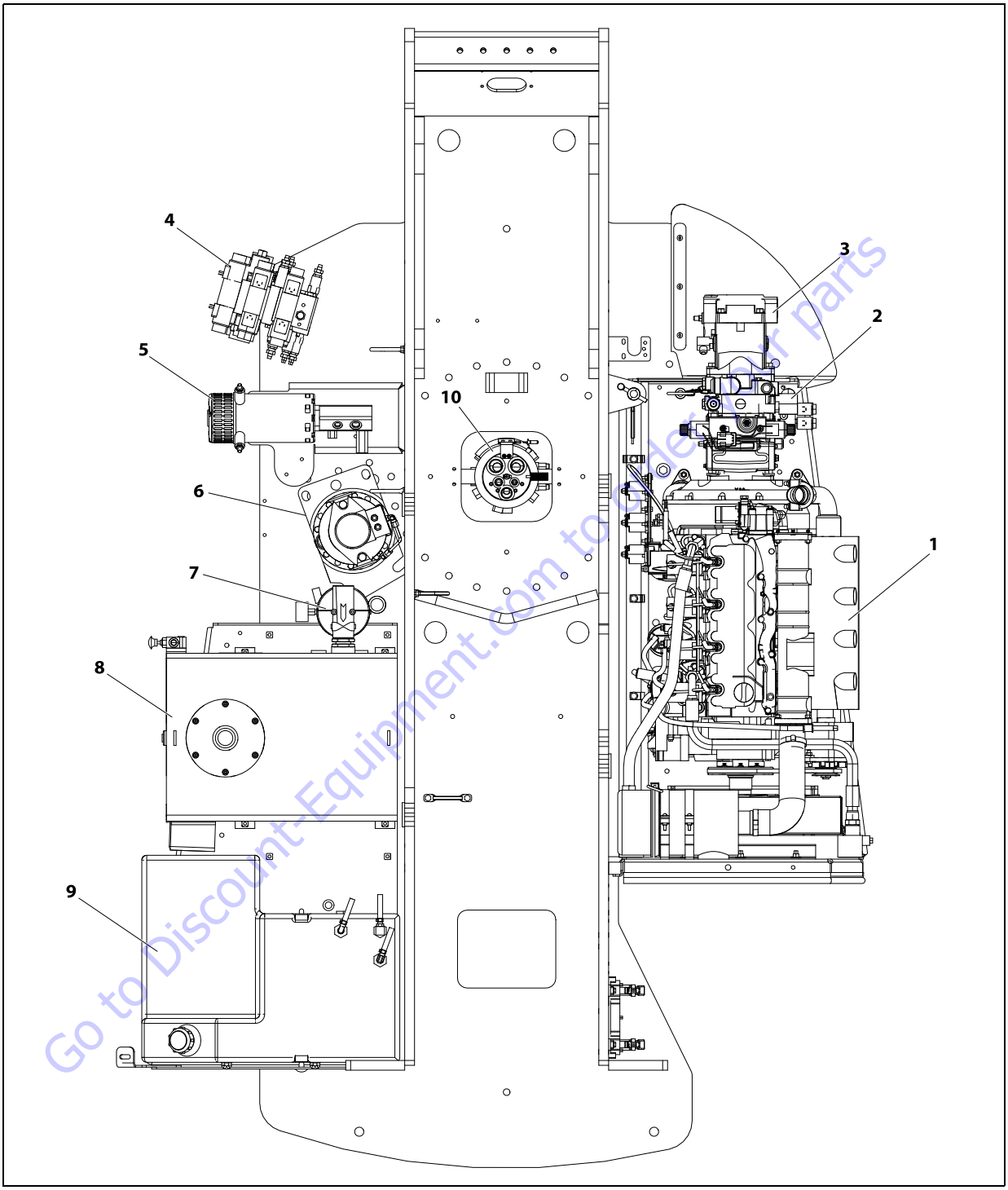

Go to Discount-Equipment.com to order your parts

1. Engine
2. Piston Pump
3. Gear Pump
4. Main Control Valve
5. Auxiliary Power Pump
6. Swing Drive
7. Return Filter Assembly
8. Hydraulic Oil Tank
9. Fuel Tank
10. Rotary Coupling

Figure 3-5. Turntable Component Location

3.3 WHEEL DRIVE ASSEMBLY (PRIOR TO SN 0300138447)

Removal

NOTE: *The drive motor can be removed through the axle flange as part of the wheel drive assembly or they can be removed separately through the bottom of the frame while leaving the drive hub bolted to the axle.*

1. Use a jack to lift the frame enough so the tire and wheel assembly is off the ground. Place blocking strong enough to support the weight of the machine under the frame and remove the jack.

NOTE: *The foam-filled tire & wheel assembly weighs approximately 601 lbs. (273 kg).*

2. Remove hardware securing wheel and remove wheel assembly. Using suitable lifting device lift the wheel assembly and place in a suitable area.
3. Through the access holes in the axle, tag and disconnect the hydraulic lines running to the drive motor. Cap or plug all openings to ensure no dirt enters the hydraulic system.

NOTE: *The drive hub, drive brake, and drive motor assembly weighs approximately 275 lbs. (125 kg).*

4. Use a supporting device capable of handling the weight of the drive hub, drive brake, and drive motor and unbolt the drive hub from the frame. Remove the entire assembly from the machine.
5. Remove the nuts and washers that secure the drive motor to the drive hub and drive brake and remove the drive motor.
6. Remove the drive brake from the drive hub. If necessary, remove the studs from the drive hub.

Installation

1. Apply coat of JLG Threadlocker P/N 0100011 on studs. Install the studs on the drive hub. Slide the drive brake and drive motor over the studs.
2. Install the washers and nuts to secure the assembly together and torque the nuts.
3. Place the drive hub flange against the mounting flange on the axle and fasten it in place with the bolts and washers. Torque the bolts to 190 ft. lbs. (260 Nm).
4. Using adequate support, install wheel into wheel assembly and secure with bolts and washers.

NOTE: *Torque the bolts to 300 ft. lbs. (407 Nm).*

Go to Discount-Equipment.com to order your parts

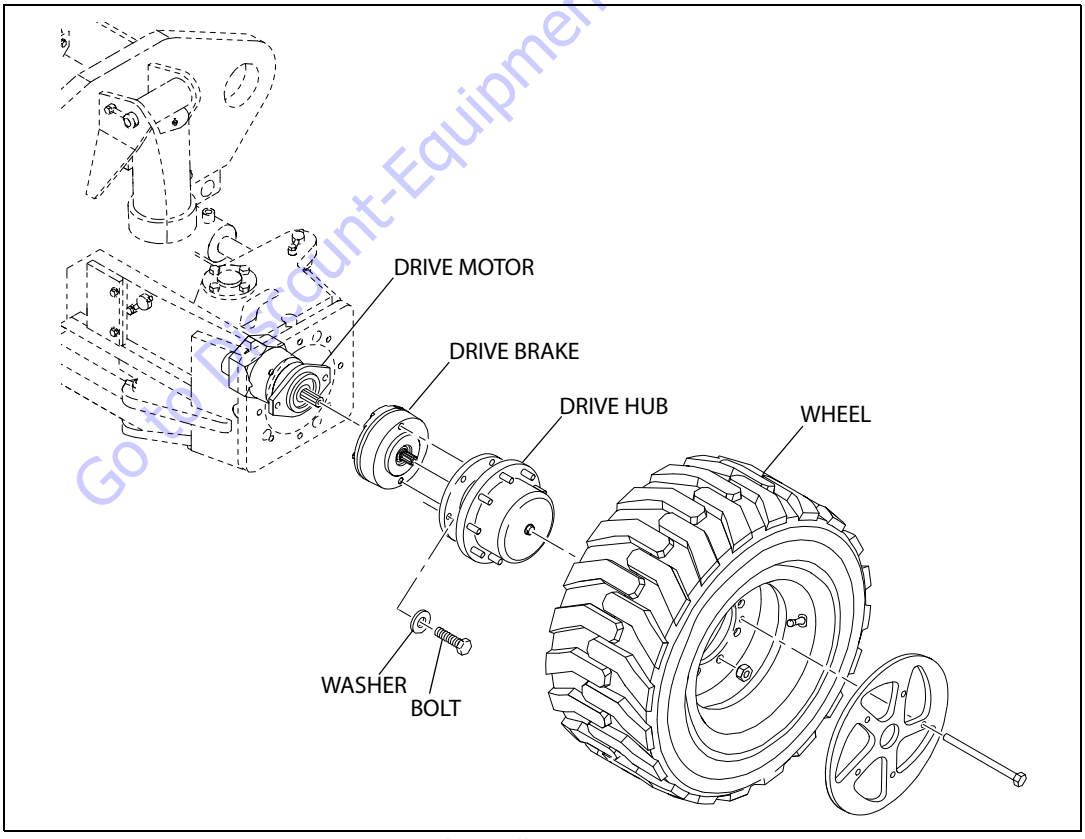

Figure 3-6. Drive Hub Installation (Prior to SN 0300138447)

3.4 WHEEL DRIVE ASSEMBLY (SN 0300138447 THROUGH 0300185827)

Removal

NOTE: *The drive motor can be removed through the axle flange as part of the wheel drive assembly or they can be removed separately through the bottom of the frame while leaving the drive hub bolted to the axle.*

1. Use a jack to lift the frame enough so the tire and wheel assembly is off the ground. Place blocking strong enough to support the weight of the machine under the frame and remove the jack.

NOTE: *The foam-filled tire & wheel assembly weighs approximately 601 lbs. (273 kg).*

2. Remove hardware securing wheel and remove wheel assembly.Using suitable lifting device lift the wheel assembly and place in a suitable area.

3. Through the access holes in the axle, tag and disconnect the hydraulic lines running to the drive motor. Cap or plug all openings to ensure no dirt enters the hydraulic system.

NOTE: *The drive hub and drive motor assembly weighs approximately 280 lbs. (128 kg).*

4. Use a supporting device capable of handling the weight of the drive hub, and drive motor and unbolt the drive hub from the frame. Remove the entire assembly from the machine.

5. Remove the nuts and washers that secure the drive motor to the drive hub and remove the drive motor.

Installation

1. Install the washers and nuts to secure the drive hub and drive motor and torque to 70 ft. lbs. (95 Nm).

2. Place the drive hub flange against the mounting flange on the axle and fasten it in place with the bolts and washers. Torque the bolts to 190 ft. lbs. (260 Nm).

3. Using adequate support, install wheel into wheel assembly and secure with bolts and washers.

NOTE: *Torque the bolts to 300 ft. lbs. (407 Nm).*

Go to Discount-Equipment.com to order your parts

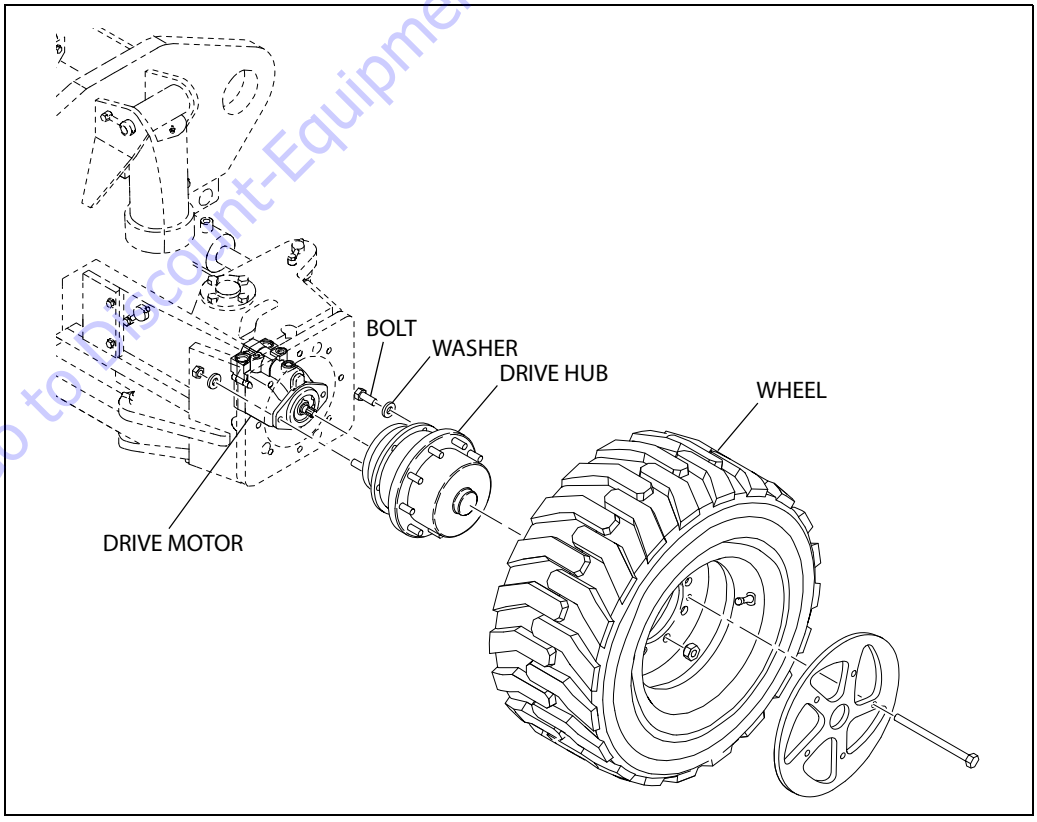

Figure 3-7. Drive Hub Installation (SN 0300138447 through 0300185827)

3.5 DRIVE HUB (PRIOR TO SN 0300185827)

Disassembly

4. Position hub over suitable container and remove drain plugs (10) from unit. Allow oil to completely drain, then replace drain plugs.
5. Remove eight bolts (41) and four shoulder bolts (42) securing cover assembly to hub (7). Remove cover assembly (23) and discard o-ring seal (22).
6. Lift carrier assembly and top thrust washer and thrust bearing (39, 40) from hub. Thrust washer may stick inside cover.
7. Pry ring gear (21) loose from hub and remove it. Remove o-ring seal (22) from hub counter bore and discard it.
8. Remove input gear (37) and thrust spacer (36) from input shaft assembly and remove input shaft assembly from hub.
9. Lift internal gear (12) and thrust washer and thrust bearing (39, 40) from hub. Thrust washer may stick to bottom of carrier.
10. Remove retaining ring (9) from spindle (1) and discard; lift hub from spindle.

⚠ CAUTION

EYE PROTECTION SHOULD BE WORN DURING RETAINING RING REMOVAL.

11. Remove inside bearing cone (6) and bearing shim (8).
12. If necessary, pry seal (2) out of hub using screwdriver or pry bar. With seal removed, outside bearing cone (4) can be removed.
13. If necessary, remove inner and outer bearing cones (3, 5) using a suitable slide hammer puller.

NOTICE

WHEN REBUILDING DRIVE HUB, REMOVE AND REPLACE ALL O-RINGS AND RETAINING RINGS.

Cleaning and Inspection

1. Thoroughly clean all parts in an approved cleaning solvent.
2. Inspect bearing cups and cones for damage, pitting, corrosion, or excessive wear. If necessary, replace bearings as a complete set ensuring that they remain covered until use.
3. Inspect bearing mounting surfaces on spindle, hub, input shaft and carrier. Replace components as necessary.
4. Inspect all geared components for chipped or broken teeth and for excessive or uneven wear patterns.
5. Inspect carrier for damage, especially in anti-roll pin and planet shaft hole areas.
6. Inspect all planet shafts for scoring or other damage.
7. Inspect all threaded components for damage including stretching, thread deformation, or twisting.
8. Inspect seal mounting area in hub for burrs or sharp edges. Dress applicable surfaces or replace components as necessary.
9. Inspect cover for cracks or other damage, and o-ring sealing area for burrs or sharp edges. Dress applicable surfaces or replace cover as necessary.

Repair

1. Cover Assembly.
   a. Remove two bolts (25) securing disconnect cap (26) to cover (23) and remove cap.
   b. Remove two bolts (25) securing cover cap (24) to cover and remove cap.
   c. Remove disconnect rod (27) from cap and remove o-rings (28, 29) from cover cap. Discard o-rings.
   d. If necessary, remove pipe plug (30) from cover.
   e. Clean and inspect parts in accordance with Cleaning and inspection procedures. Replace parts as necessary.
   f. If removed, screw pipe plug into cover.
   g. Slip o-ring (29) over cover cap and against face.
   h. Place o-ring (28) into cover cap internal groove. Disconnect rod may be used to push o-ring into groove.
   i. Place cover cap into cover with large hole located over pipe plug. Secure cover cap to cover with two bolts. Torque bolts to 70-80 in. lbs. (7.9-9.0 Nm).
   j. Place disconnect cap over cover cap with nipple facing out and secure with two bolts. Torque bolts to 70-80 in. lbs. (7.9-9.0 Nm).

Go to Discount-Equipment.com to order your parts

k. Turn cover over and push disconnect rod into cover cap. Rod will be held in place by friction from o-ring.

2. Carrier Assembly.

a. Drive anti-roll pin (19) into planet shaft (17) using a suitable punch.

b. Using a suitable press, press planet shaft from carrier (13). After planet shaft is removed, drive anti-roll pin from shaft.

c. Remove cluster gear (18) and thrust washers (14) from carriers.

d. Remove sixteen needle rollers (15) from cluster gear bore.

e. Remove spacer (16) from cluster gear bore and remove second set of sixteen needle rollers (15).

f. Repeat steps (a) through (e) for remaining two cluster gears.

g. Clean and inspect all parts in accordance with Cleaning and Inspection procedures. Replace parts as necessary.

h. Apply a coat of grease or petroleum jelly to cluster gear bore.

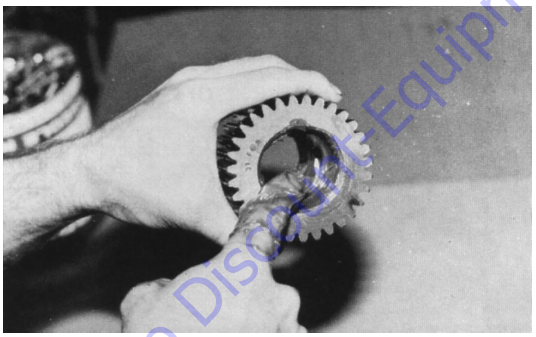

i. Place sixteen needle rollers into cluster gear bore.

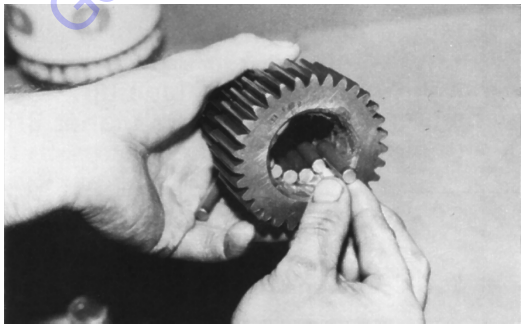

j. Place spacer into opposite side of cluster gear and against needle rollers.

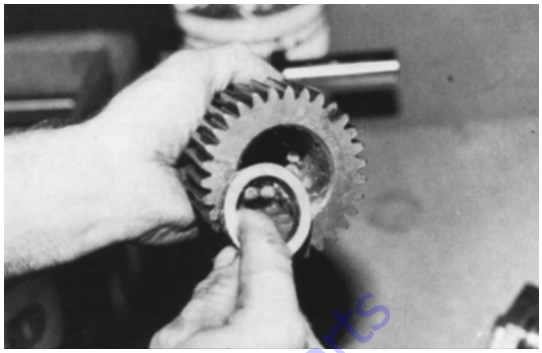

k. Place second set of sixteen needle rollers into cluster gear.

l. Apply grease or petroleum jelly to tang side of two thrust washers. Place thrust washers against bosses in carrier with washer tang fitting into slot in carrier outside diameter.

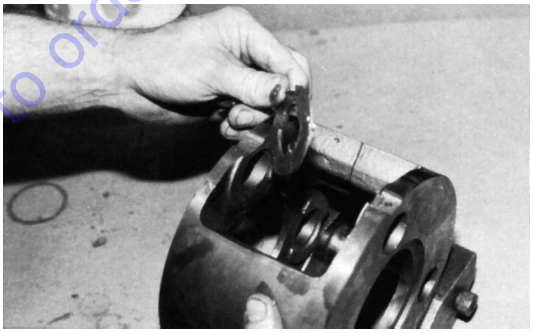

m. While keeping thrust washers in place, slide cluster gear into carrier with larger gear on side with small pin hole.

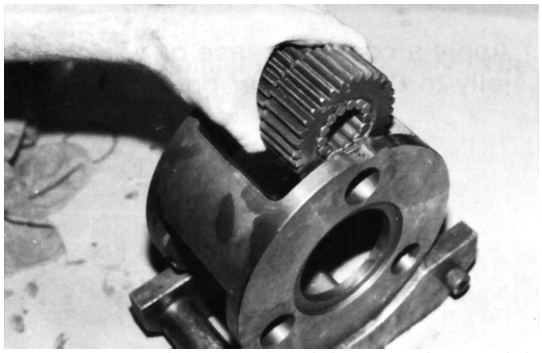

n. Line up cluster gear and thrust washers with hole in carrier and slide planet shaft through. Ensure chamfered side of hole in planet shaft is lined up with pin hole in carrier.

Go to Discount-Equipment.com to order OEM parts

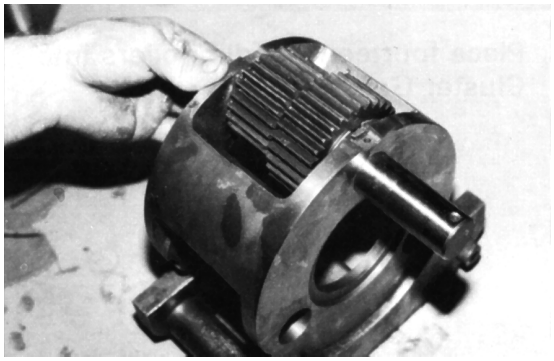

o. Drive anti-roll pin flush into carrier hole, locking planet shaft into place.

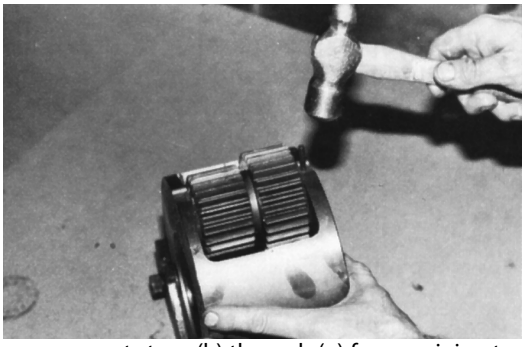

p. repeat steps (h) through (o) for remaining two cluster gears.

3. Input Shaft Assembly.

⚠ CAUTION

EYE PROTECTION SHOULD BE WORN DURING RETAINING RING REMOVAL AND INSTALLATION

a. Carefully remove retaining ring (33) from counterbore in the spindle (1) and discard retaining ring.

b. Remove two spacers (31) and spring (32) from input shaft.

c. Clean and inspect all parts in accordance with Cleaning and Inspection procedures. Replace parts as necessary.

d. Place washer (31), spring (32), and washer (31), in that order, onto input shaft.

Install retaining ring into input shaft groove to secure spacers and spring to shaft.

Go to Discount-Equipment.com to order your parts

Assembly

1. Using a suitable press, press new bearing cups (3, 5), with large inside diameters facing out, into hub (7) counter bores.

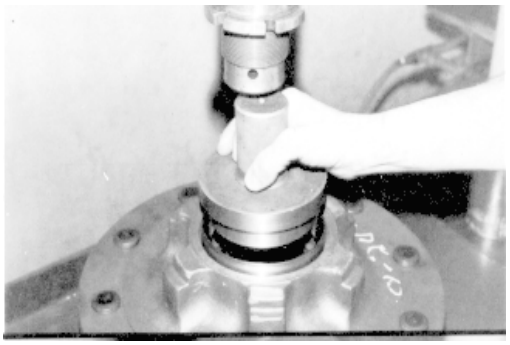

2. Place bearing cone (4) into bearing cup (3) in small end of hub.

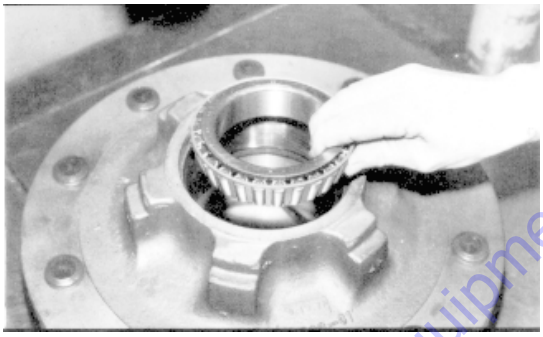

3. Press new seal (2) into hub counter bore with flat metal side facing in. Use a flat object to ensure that seal is pressed evenly and is flush with hub face.

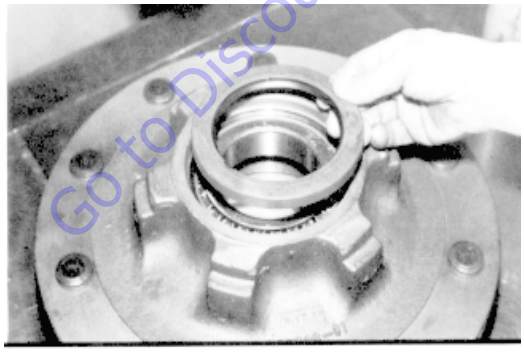

4. Lower hub onto spindle (1) with large open end up.

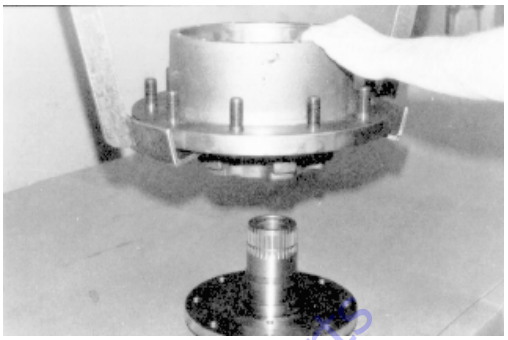

5. Place bearing cone (6) over end of spindle and into bearing cup.

6. Place bearing shim (8) over end of spindle and against bearing cone.

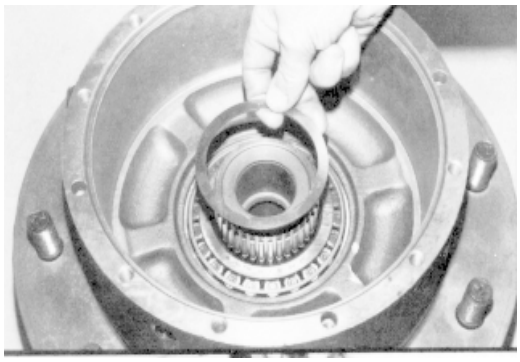

⚠ CAUTION

EYE PROTECTION SHOULD BE WORN DURING RETAINING RING INSTALLATION.

Go to Discount-Equipment.com to order your parts

7. Install new retaining ring (9) completely into spindle groove and against bearing shim. Ensure retaining ring is entirely in groove.

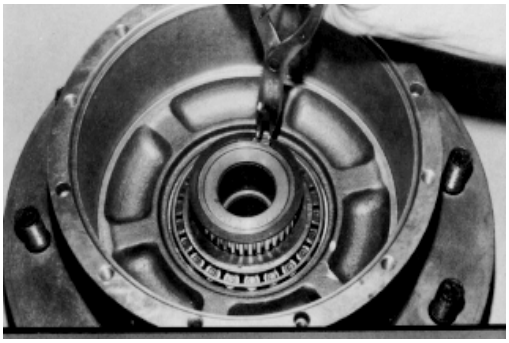

8. Place internal gear (12) onto end of spindle.

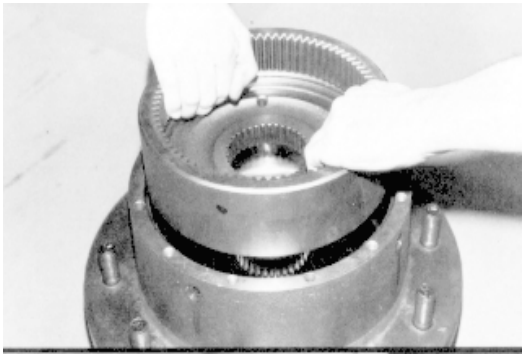

9. Install thrust washers and thrust bearing (39, 40) on the portion of the spindle which extends into the internal gear.

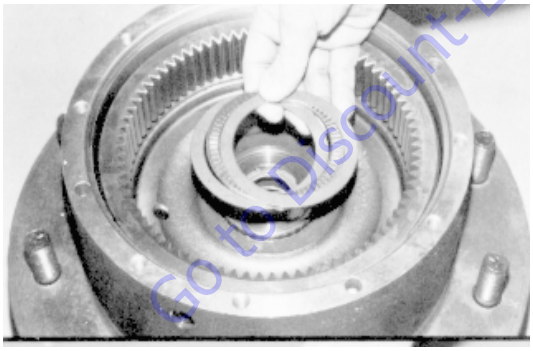

10. Install retaining ring (34) into input shaft retaining ring groove.

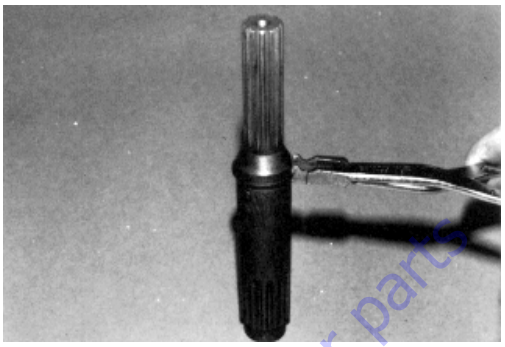

11. Place input shaft assembly (35) into spindle bore with unsplined end facing out.

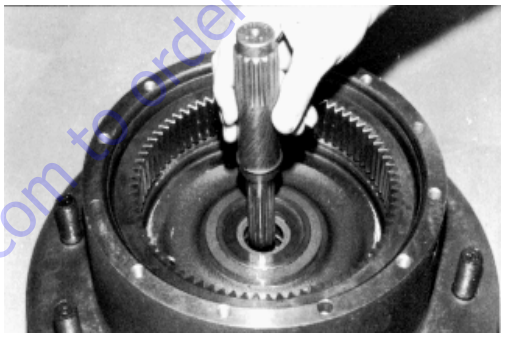

12. Place thrust spacer (36) over input shaft (35) with counter bore side facing spindle.

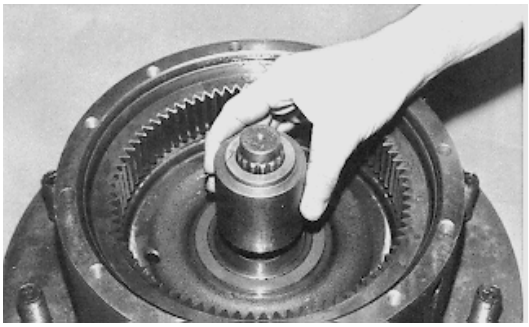

Go to Discount-Equipment.com to order your parts

13. Locate the four counter reamed holes in the face of the hub, mark them for later identification.

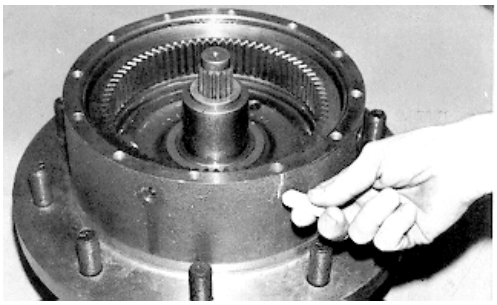

14. Place o-ring (22) into hub counter bore. Use petroleum or grease to hold o-ring in place. Slight stretching of o-ring may be necessary to insure proper seating.

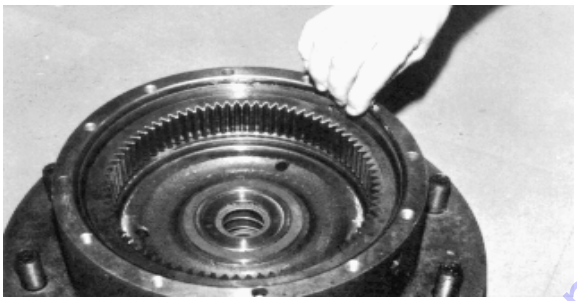

15. Place carrier assembly on a flat surface with large gears up and positioned as shown. Find punch marked tooth on each large gear and locate at 12 o'clock (straight up) from each planet pin. Marked tooth will be located just under carrier on upper two gears

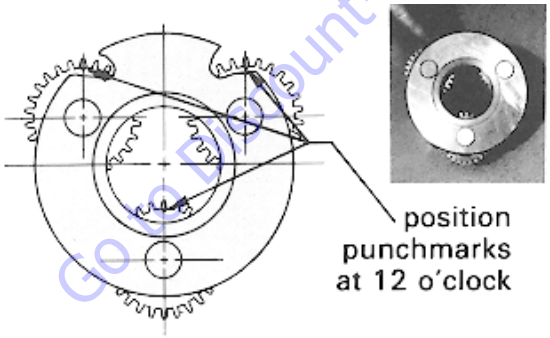

16. With shoulder side of ring gear (21) facing down, place ring gear over (into mesh with) large gears. Ensure punch marks remain in correct location during ring gear installation.

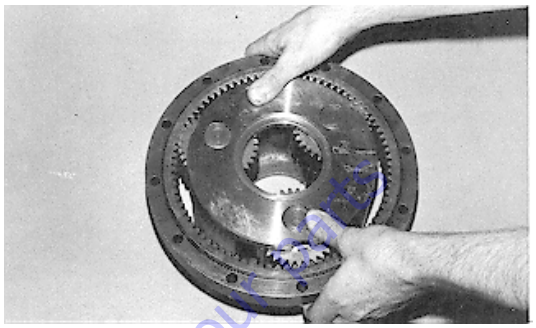

17. While holding ring gear, input gear, and cluster gears in mesh, place small side of cluster gears into mesh with internal gear. On ring gear, locate hole marked 'X' over one of counter bored holes in hub.

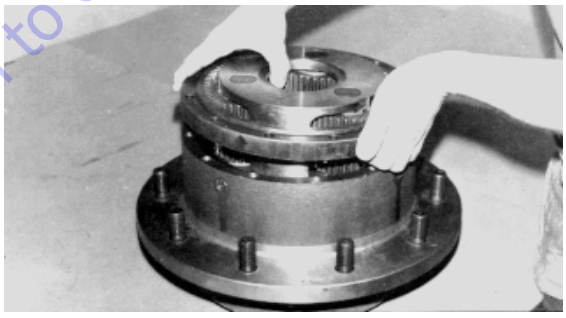

NOTE: *If gears do not mesh easily or carrier assembly does not rotate freely, then remove carrier and ring gear and check cluster gear timing.*

18. Install input gear (37) into carrier, meshing with large diameter cluster gears (18). Counter bore in bore of input gear must be to outside of carrier assembly.

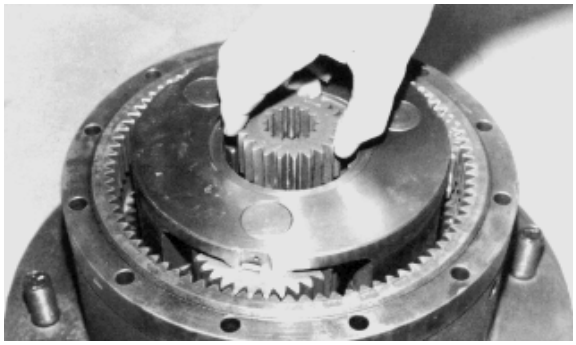

Go to Discount-Equipment.com to order your parts

19. After inserting at least one shoulder bolt in the proper location, rotate the carrier. Check freedom of rotation and timing.

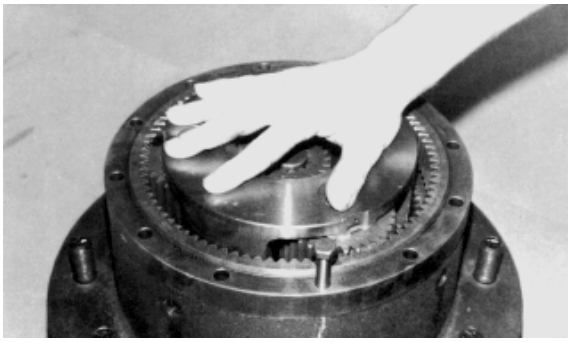

20. Install thrust washers and thrust bearing (39, 40) into carrier counter bore.

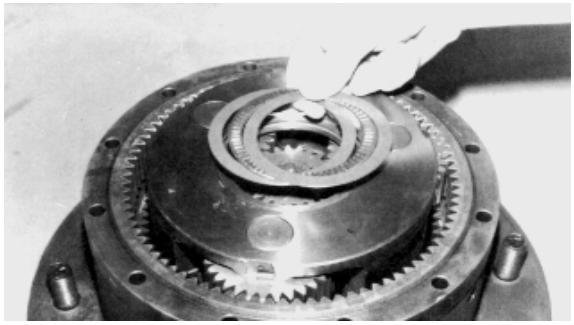

21. Place o-ring (22) into cover assembly counter bore. Use petroleum jelly or grease to hold o-ring in place.

22. Place cover assembly over ring gear with oil level check plug in cover located approximately 90 degrees from oil fill plug in hub.

23. Locate four shoulder bolts (42), 90 degrees apart into counter bored holes in hub marked in step (13). Torque shoulder bolts to 47 ft. lbs. (64 Nm).

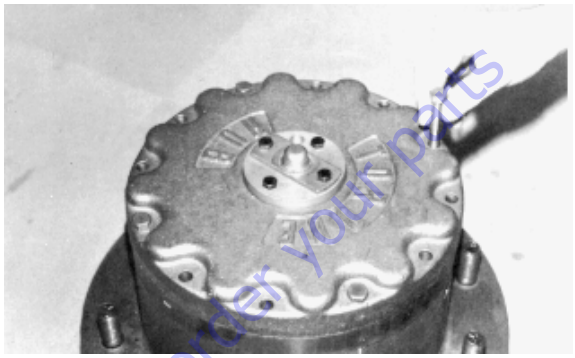

24. Install bolts (41) in remaining holes. Torque bolts to 47 ft. lbs. (64 Nm).

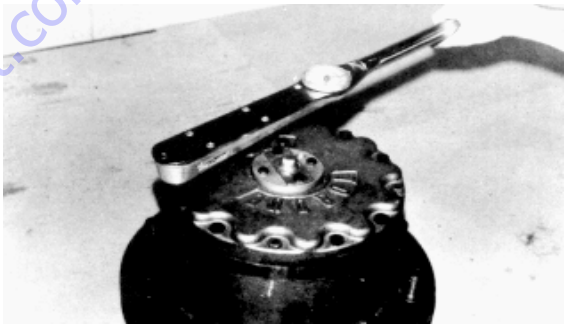

25. Place coupling (1) into spindle and onto input shaft.

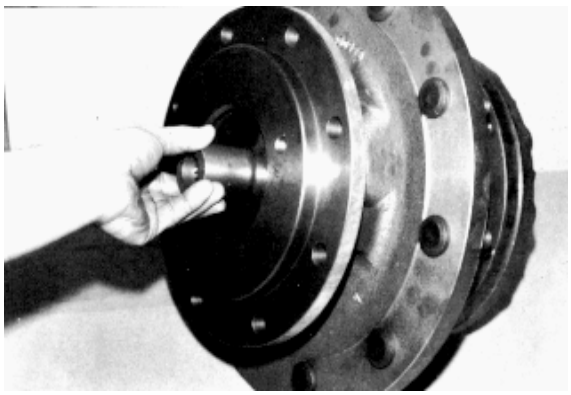

26. Fill hub one-half full of EPGL 90 lubricant before operation.

Go to Discount-Equipment.com to order your parts

1. Spindle
2. Seal
3. Bearing Cup
4. Bearing Cone
5. Bearing Cup
6. Bearing Cone
7. Hub
8. Spacer
9. Retaining Ring
10. Plug
11. Wheel Bolt
12. Internal Gear
13. Carrier
14. Thrust Washer
15. Needle Roller
16. Spacer
17. Piston Shaft
18. Cluster Gear
19. Roll Pin
20. Not Used
21. Cluster Gear
22. O-ring
23. Cover
24. Cover Cap
25. Bolt
26. Disconnect Cap
27. Disconnect Rod
28. O-ring
29. O-ring
30. Pipe Plug
31. Washer
32. Spring
33. Retaining Ring
34. Retaining Ring
35. Input Shaft
36. Thrust Spacer
37. Input Gear
38. Not Used
39. Thrust Washer
40. Thrust Bearing
41. Bolt
42. Shoulder Bolt
43. Coupling

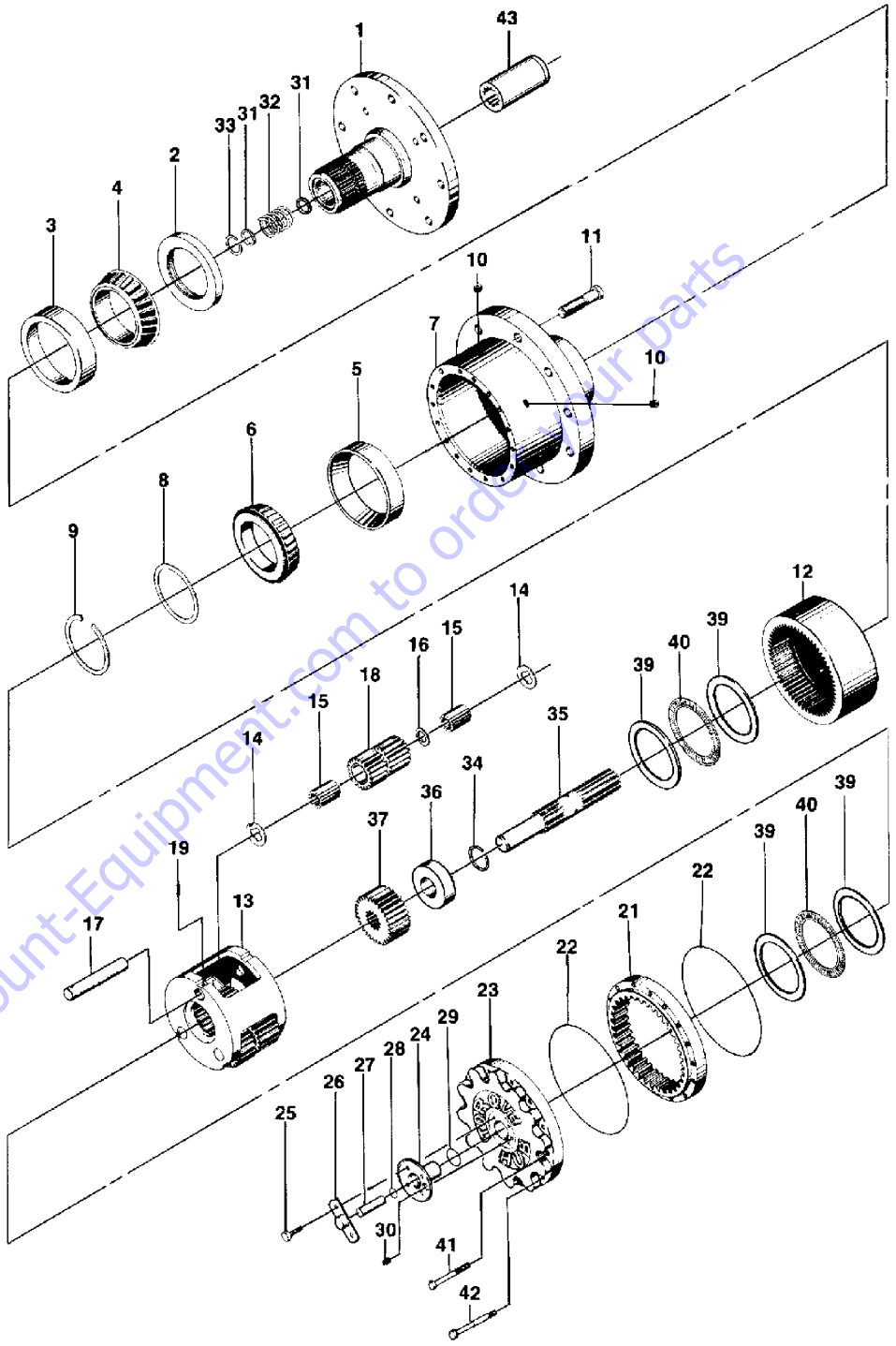

Go to Discount-Equipment.com to order your parts

Figure 3-8. Drive Hub (Fairfield)

3.6 DRIVE BRAKE - MICO (PRIOR TO SN 0300138447)

Disassembly

1. Remove pressure plate (3) from cover plate (16) by removing capscrews (1) and washers (2).

⚠ CAUTION

PRESSURE PLATE IS UNDER SPRING TENSION OF APPROXIMATELY 907 KGF (2000 IBS). THE TWO CAPSCREWS MUST BE LOOSENED EVENLY TO RELIEVE THIS FORCE. IF A HYDRAULIC PRESS IS AVAILABLE, 1361 KGF (3000 IBS) MINIMUM, THE PRESSURE PLATE CAN BE HELD IN POSITION WHILE REMOVING THE CAPSCREWS. COVER PLATE (16) MUST BE SUPPORTED AS SHOWN IN FIGURE 3-9.

2. Remove case seal (4) from cover plate (16).
3. Remove piston (7) from pressure plate (3).
4. Remove a-ring (5), backup ring (6), a-ring (8) and backup ring (9) from piston (7).
5. Remove stator disc (11), rotor disc (12) and return plate (13) from cover (16).

NOTE: *Not all models use the same number of springs or spring pattern.*

6. Remove dowel pins (15) and springs (14) from cover plate (16). Record this information for assembly purposes.
7. Remove retaining ring (19) from cover plate (16).
8. Remove shaft (10) by pressing or using a soft mallet on male end of shaft (10).

NOTE: *Cover plate (16) must be supported as shown in FIGURE 3-9.*

9. Remove retaining ring (20) from cover plate (16) and press out oil seal (17) and bearing (18) if required.

NOTE: *Cover plate (16) must be sup¦ported as indicated in Figure 3-9.*

Assembly

NOTICE

LUBRICATE ALL RUBBER COMPONENTS FROM REPAIR KIT WITH CLEAN TYPE FLUID USED IN THE SYSTEM.

1. Use an alkaline wash to clean parts before assembly.
2. Press oil seal (17) into cover plate (16) until it is flush with bearing shoulder. Note direction of seal.
3. Press bearing (18) into position until it bottoms out on borestep.

NOTE: *Cover plate (16) must be supported as indicated in Figure 3-9.*

4. Install retaining ring (20) in cover plate (16).
5. Press shaft (10) into bearing (18) until it bottoms on shoulder.

NOTE: *Bearing (18) inner race and cover plate (16) must be supported as indicated in Figure 1 during this operation.*

6. Install retaining ring (19) on shaft (10).
7. Insert dowel pins (15) and springs (14) in cover plate (16).

NOTE: *Be sure to use the same number of springs and spring pattern as recorded during disassembly.*

8. Position return plate (13) on springs (14).

NOTE: *Discs (11 & 12) and return plate (13) must remain dry during installation. No oil residue must be allowed to contaminate disc surfaces.*

9. Install rotor disc (12) and stator disc (13).
10. Install o-ring (5), backup ring (6), o-ring (8) and backup ring (9) on piston (7). Note order of a-rings and backup rings. Insert piston (7) into pressure plate (3).

NOTE: *Be careful not to shear o-rings or backup rings. Be careful not to scratch or mar piston.*

11. Install new case seal (4) in cover plate (16).
12. Position pressure plate (3) on cover plate (16) aligning dowel pins (15) with holes in pressure plate.
13. Install capscrews (1) and washers (2) and tighten evenly to draw pressure plate (3) to cover plate (16). Torque capscrews 55 ft. lbs. (74.6 Nm).

NOTE: *A hydraulic press will simplify installation of pressure plate on cover. Clamp pressure plate in position while tightening the capscrews. Cover plate (16) must be supported as indicated in Figure 3-9.*

⚠ CAUTION

IF HYDROSTATIC BENCH TESTING IS PERFORMED ON THE BRAKE ASSEMBLY, RELEASE PRESSURE MUST NOT EXCEED 137.9 BAR (2000 PSI).

Go to Discount-Equipment.com to order your parts

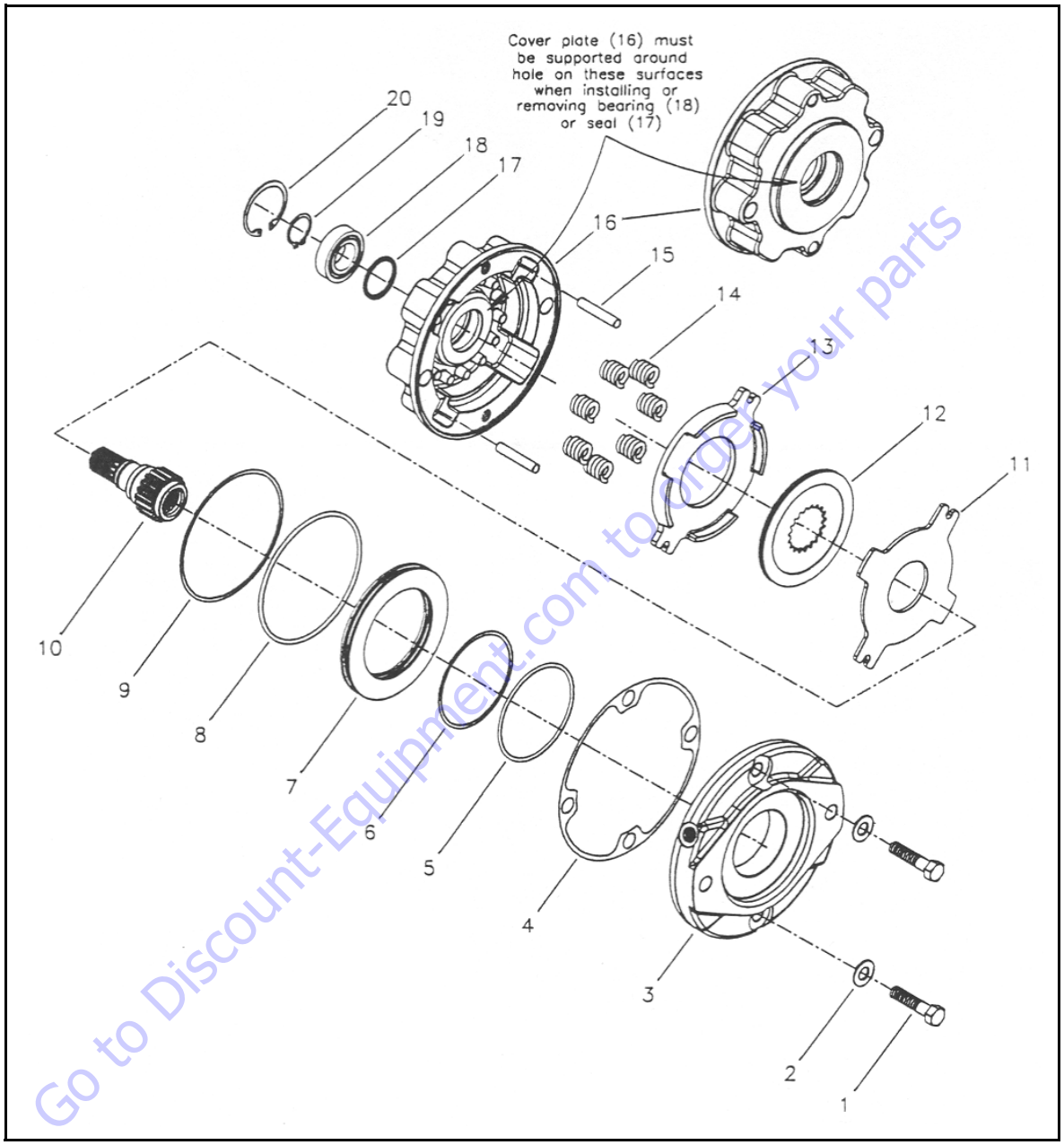

Go to Discount-Equipment.com to order your parts

1. Capscrew
2. Washer
3. Pressure Plate
4. Case Seal
5. O-ring
6. Backup Ring
7. Piston
8. O-ring
9. Backup Ring
10. Shaft
11. Stator Disc
12. Rotor Disc
13. Return Plate
14. Springs
15. Dowel Pin
16. Cover Plate
17. Oil Seal
18. Bearing
19. Retaining Ring
20. Retaining Ring

Figure 3-9. Drive Brake - Mico (Prior to SN 0300138447)

Bleeding

1. Install brake in system and connect pressure lines.
2. Bleed pressure release section of brake by pressurizing side inlet port and allowing air to escape from top port. Pressure should not exceed 6.9 bar (100 psi) during bleeding.
3. Apply sufficient pressure to release brake and check for proper operation in system.

Table 3-2. Troubleshooting

PROBLEM	CAUSE	EXPLANATION	ACTION
Brake slips	Excessive pressure in hydraulic system	If there is back pressure in the actuation line of the brake, holding torque will be reduced.	Check filters, hose size, restrictions in other hydraulic components.
	Oil in brake if designed for dry use	Wet linings generate 67% of the dry torque rating. If the brake has oil in it, check the type of oil hydraulic or gearbox. 1. Gearbox oil 2. Hydraulic oil	Replace oil seal in brake. Check motor seal Check piston seals ***NOTE:*** *Internal components will need to be inspected, cleaned and replaced as required.*
	Disc plates worn	The thickness of the disc stack sets the torque level. A thin stack reduces torque.	Check disc thickness.
	Springs broken or have taken a permanent set	Broken or set springs can cause reduced torque - a rare occurrence.	Check release pressure. (See spring replacement).
Brake drags or runs hot	Low actuation pressure	The brake should be pressurized to minimum of 1.38 bar (20 psi) over the full release pressure under normal operating conditions. Lower pressures will cause the brake to drag thus generating heat.	Place pressure gauge in bleed port & check pressure with system on.
	Bearing failure	If the bearing should fail, a large amount of drag can be generated.	Replace bearing.
Brake will not release	Stuck or clogged valve	Brakes are designed to come on when system pressure drops below stated release pressure. If pressure cannot get to brake, the brake will not release.	Place pressure gauge in bleed port - check for adequate pressure. Replace inoperative line or component.
	Bad o-rings	If release piston will not hold pressure, brake will not release.	Replace o-rings.
	Discs frozen	These brakes are designed for only limited dynamic braking. A severe emergency stop or prolonged reduced release pressure operation may result in this type of damage.	Replace disc stack.

Go to Discount-Equipment.com to order your parts

3.7 DRIVE BRAKE (SN 0300138447 THROUGH 0300185827)

Disassembly

1. Supporting brake on face A:, remove the six socket head capscrews and washers (Items 13 & 14) In equal increments to ensure the spring pressure within the brake is reduced gradually and evenly.

   If a press is available, the cylinder housing (8) can be restrained on face B while removing the six capscrews and washers (13 & 14).

   The brake assembly can now be fully dismantled and the parts examined.

2. Remove cylinder housing (8), and piston (9) subassembly and dismantle, if required, removing O-ring seals (15 & 17) and backing rings (16 & 18) as necessary.

3. Remove gasket (7) from housing (2).

4. Remove friction plates (3 & 6) and pressure plate (4).

5. Remove 2 dowel pins (19).

6. Remove springs (22 & 23).

7. Should it be necessary to replace ball bearing (10) or shaft seal (12), reverse remainder of brake subassembly, supporting on face C of housing (2).

8. Remove internal retaining ring (11).

9. Using arbor press or similar to break Loctite seal, remove brake shaft (1) from housing (2) and lay aside.

10. Reverse housing (2) and press out ball bearing (10). Shaft seal (12) can also be removed if necessary.

Inspection

1. Inspect friction plates (3 & 6) and friction surface on pressure plate (4) for wear or damage.

2. Examine friction plates (3) and brake shaft (1) for wear or damage to the splines.

3. Examine input and output splines of brake shaft (1) for wear or damage.

4. Examine compression springs (22 & 23) for damage or fatigue.

5. Check ball bearing (10) for axial float or wear.

6. Examine o-ring seals (15 & 17) and backing rings (16 & 18) for damage.

Assembly

1. Lightly lubricate rotary shaft seal (12) and assemble to housing (2) taking care not to damage seal lip.

2. Apply ring of Loctite 641 or equivalent adhesive to full circumference of housing (2) bearing recess adjacent to shoulder.

   Apply complete coverage of Loctite 641 to outside diameter of bearing (10) and assemble fully In housing (2), retaining with internal retaining ring (11). Remove excess adhesive with a clean cloth.

   Press shaft (1) through bearing (10), ensuring bearing inner ring Is adequately supported.

3. Assemble correct quantity of springs (22 & 23) in orientation required.

4. Lubricate o-ring seals (15 & 17) with Molykote 55M (or equivalent) silicon grease and assemble together with backing rings (16 & 18) to piston (9). To ensure correct brake operation. It is important that the backing rings are assembled opposite to the pressurized side of piston.

5. Correctly orientate piston (9) aligning spaces with the two dowel pin holes and, assemble into cylinder housing (8) taking care not to damage seals and carefully lay aside.

6. Locate 2-off pins (19) in housing (2) followed by pressure plate (4) and friction plates i.e. an inner (3) followed by an outer (6) in correct sequence.

7. Position gasket (7) in correct orientation.

8. Align two holes in cylinder with dowel pins (19) and assemble piston & cylinder sub-assembly to remainder of brake securing with 6 capscrews and washers (13 & 14). Torque to 55 ft.lbs. (75 Nm).

NOTE: *The use of a suitable press (hydraulic or arbor) pressing down on cylinder end face B will ease assembly of the capscrews (13).*

Go to Discount-Equipment.com to Order your parts

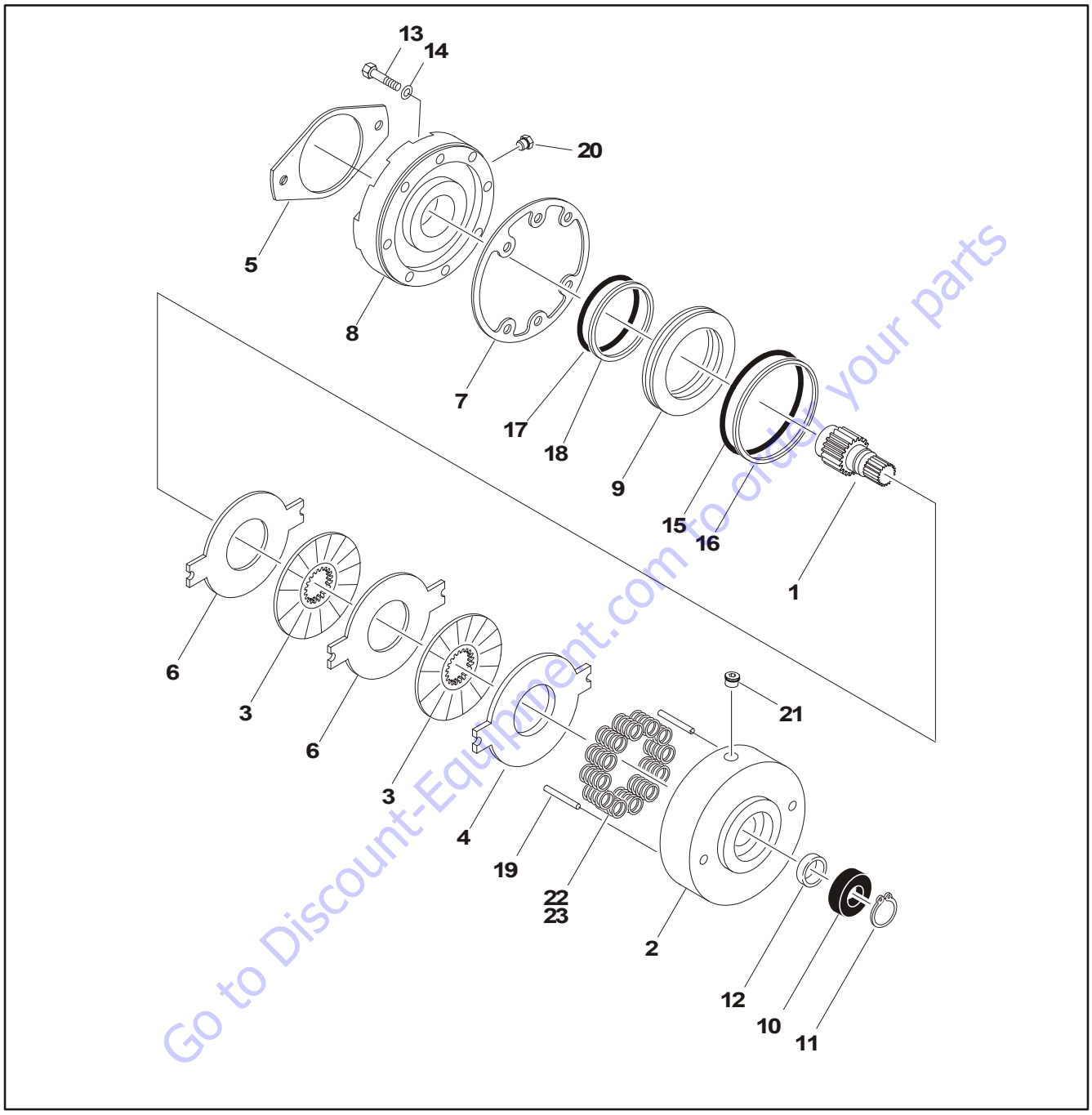

Go to Discount-Equipment.com to order your parts

1. Shaft
2. Housing
3. Friction Plate
4. Pressure Plate
5. Gasket
6. Outer Plate
7. Gasket
8. Cylinder
9. Piston
10. Ball Bearing
11. Retaining Ring
12. Shaft Seal
13. Capscrew
14. Lockwasher
15. O-ring
16. Backup Ring
17. O-ring
18. Backup Ring
19. Dowel Pin
20. Plug
21. Plug
22. Spring (Natural)
23. Spring (Blue)

Figure 3-10. Drive Brake (SN 0300138447 through 0300185827)

3.8 DRIVE MOTOR (PRIOR TO SN 0300138447)

Spare Parts Kits

Sealing kit, existing spare parts: shaft sealing ring, 6 different O-rings and a circlip (sealing mat.: perbunan)

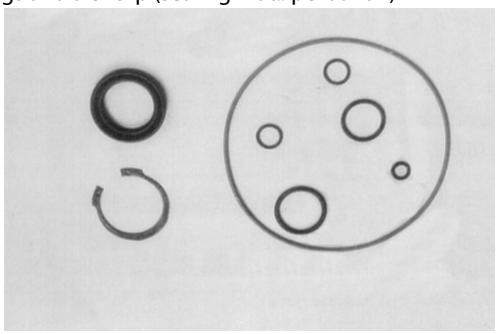

Same sealing kit like shown above only seal material changed to Viton

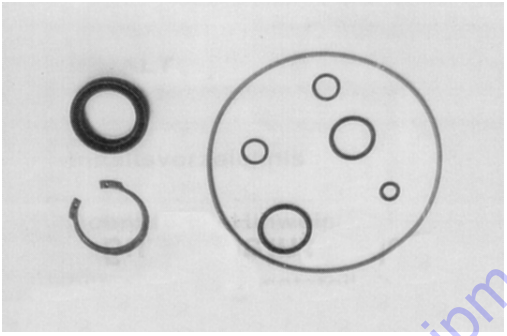

Drive shaft

Bearing set/miscellaneous parts

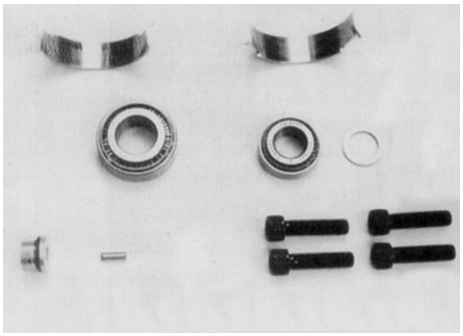

Rotary group complete 9 pistons, cylinder sub-assembly, valve plate (cw or ccw corresponding to the order) retaining plate and retaining ball.

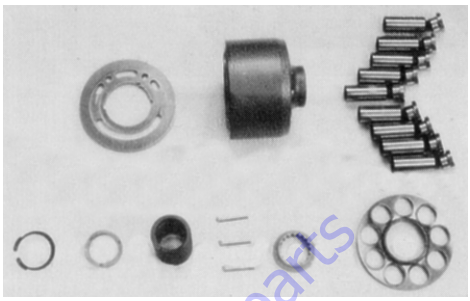

Swash Plate

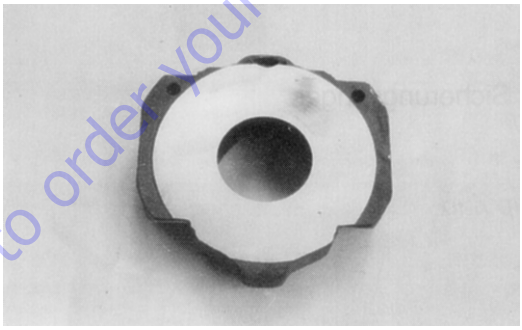

Parts of the control device: control piston, piston rod, plug, spring stopper max flow, hex. nut, and hex. head nut

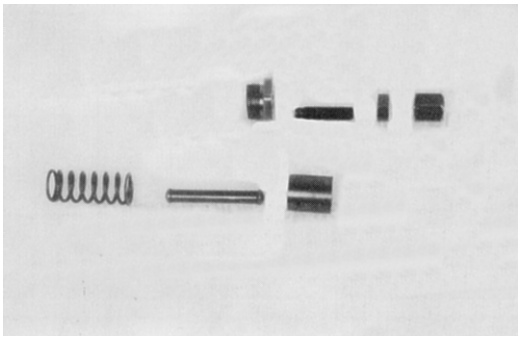

Spare parts kit DFR pilot valve

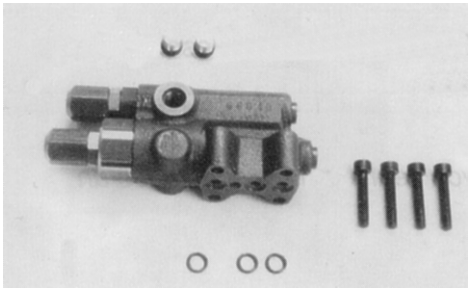

Go to Discount-Equipment.com to order your parts

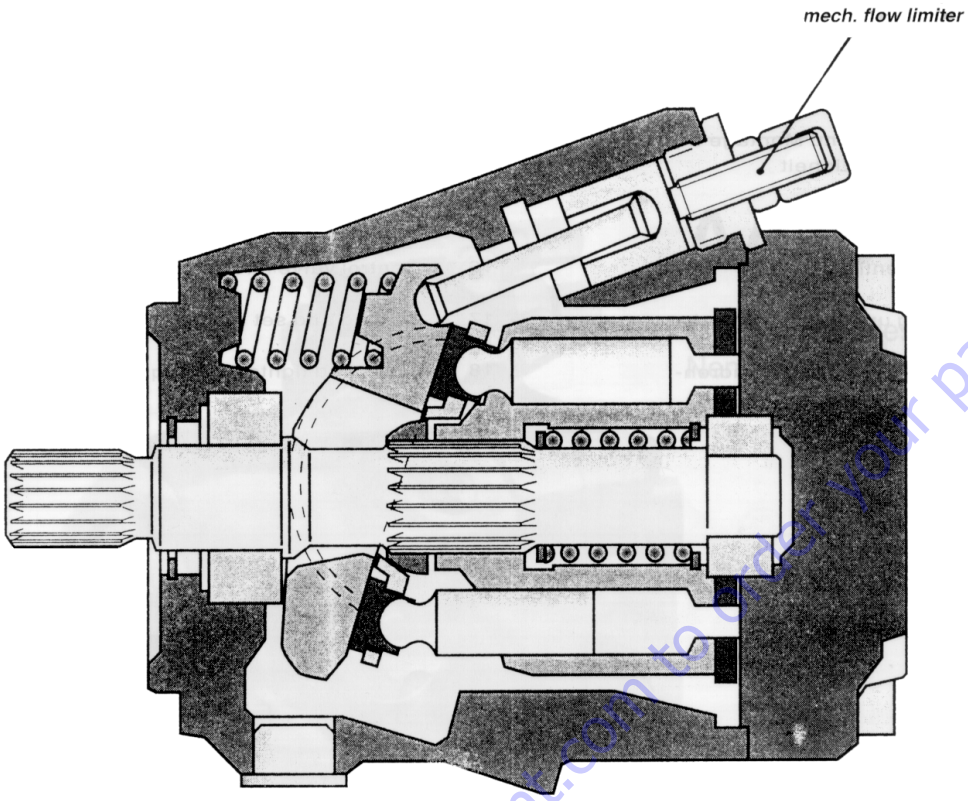

Figure 3-11. Drive Motor Cutaway

Replacing the Drive Shaft Seal

1. Remove the snap ring

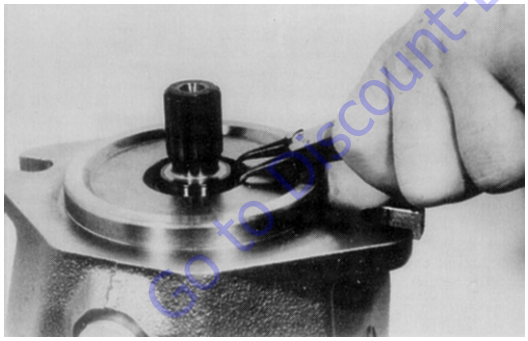

2. Change the shaft seal and check its sliding surface (drive shaft) and housing, grease the sealing ring.

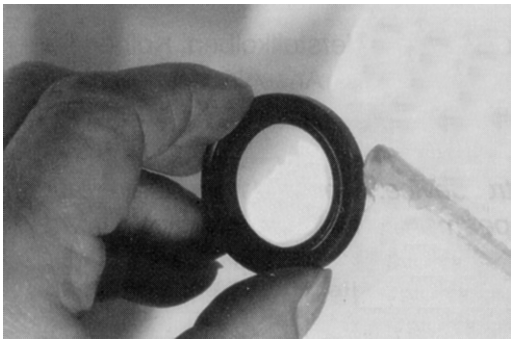

Go to Discount-Equipment.com to order your parts

3. Be careful while you seal the drive shaft, use an adhesive tape to protect the splines.

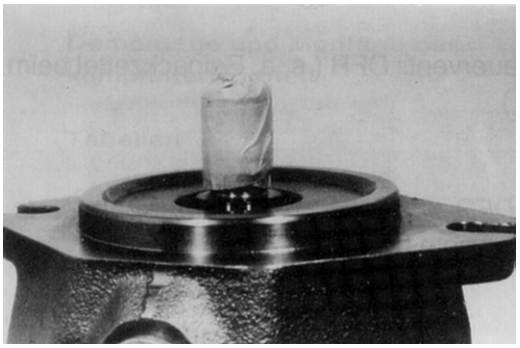

4. Assemble the sealing ring. The fitting tool will hold the sealing ring in the correct position in the pump housing.

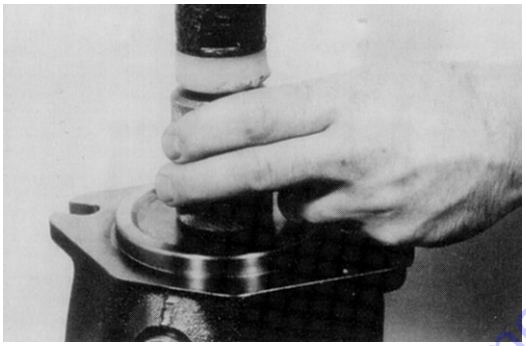

5. Assemble the snap ring.

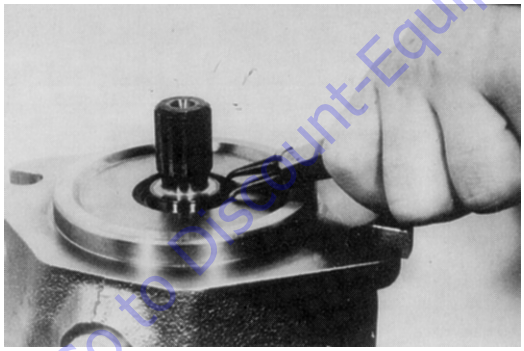

6. Assemble the snap ring in the correct position.

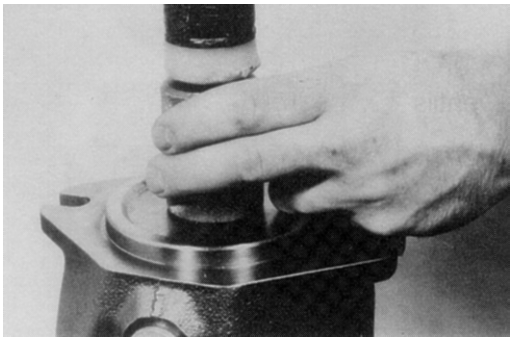

Disassembly and Assembly

1. Disassemble the pilot valve.

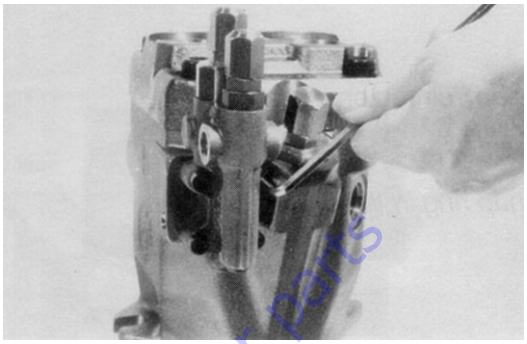

2. Mark the position of the port plate and remove the socket screw from the port plate.

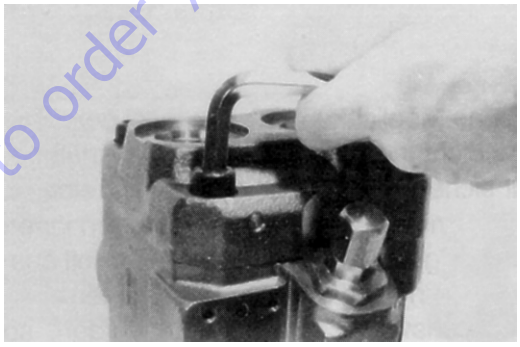

3. Remove the port plate together with the valve plate (hold the valve plate so that the plate can't fall down).

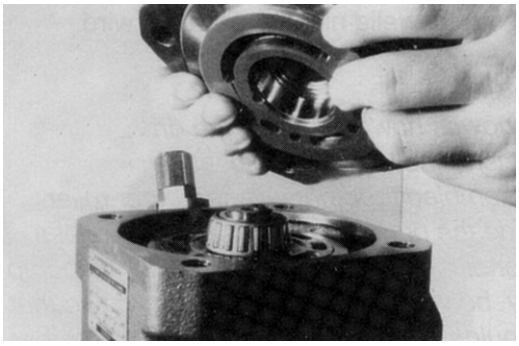

4. Remove the o-ring.

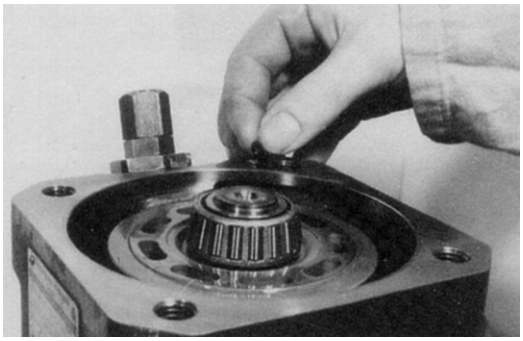

Go to Discount-Equipment.com to order your parts

5. Disassemble the taper roller bearing.

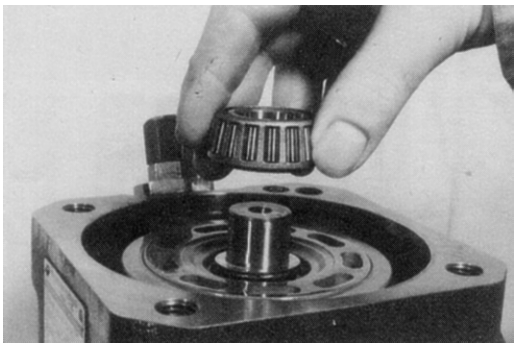

6. Remove the adjustment shim.

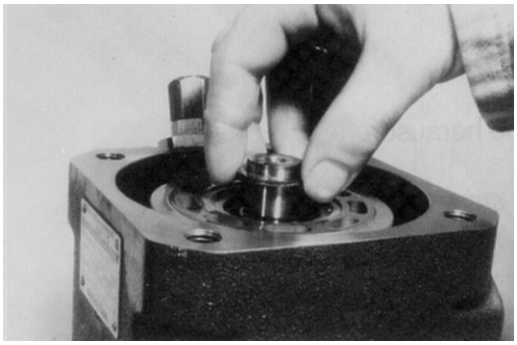

7. Unscrew the cap nut and remove it.

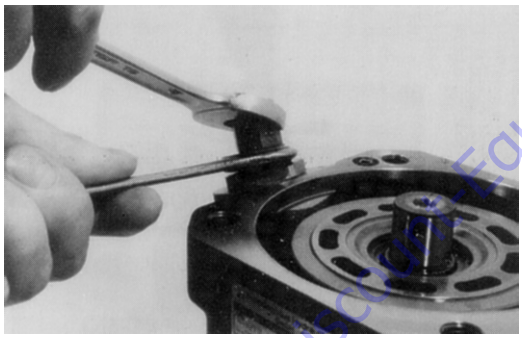

8. Loosen the retaining nut of the stopper max flow and remove it.

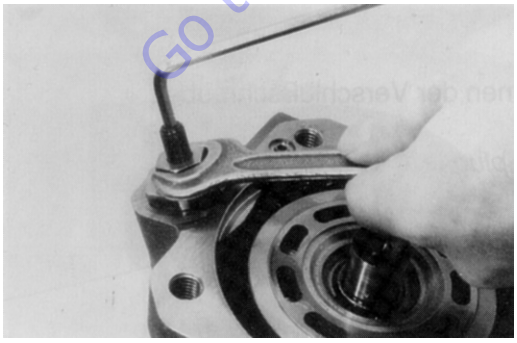

9. Turn in the stopper max flow to get swivel angle zero.

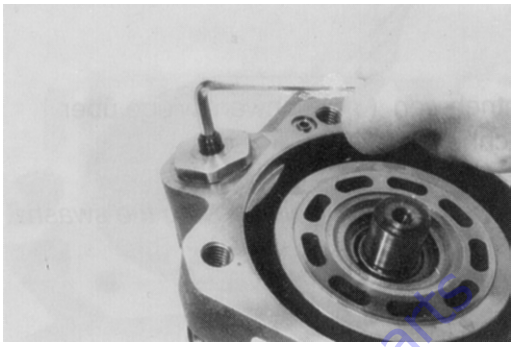

10. Disassemble the rotary group in horizontal position.

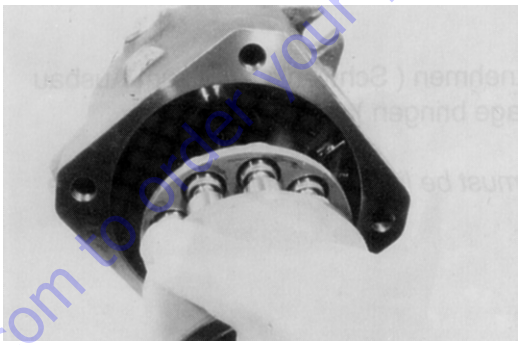

11. Disassemble the stopper - max. flow.

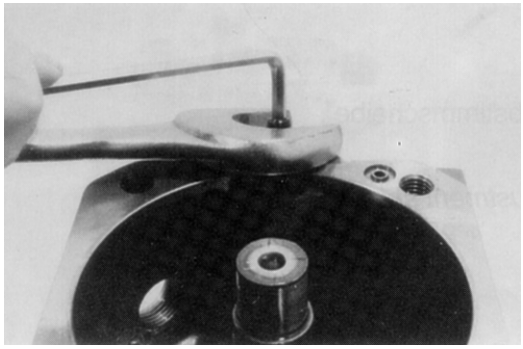

12. Remove the threaded pin (stopper - max. flow).

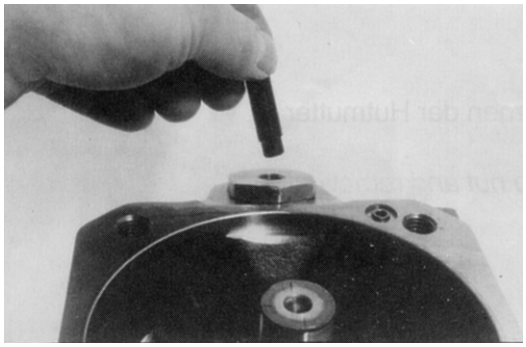

Go to Discount-Equipment.com to order your parts

13. Disassemble the plug.

14. Disassemble the control piston while moving the swash plate.

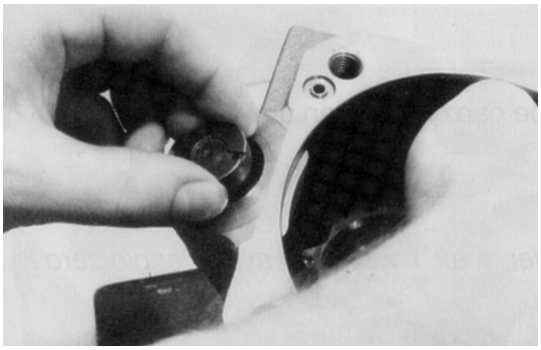

15. The swash plate must be lifted a little bit to disassemble the piston rod.

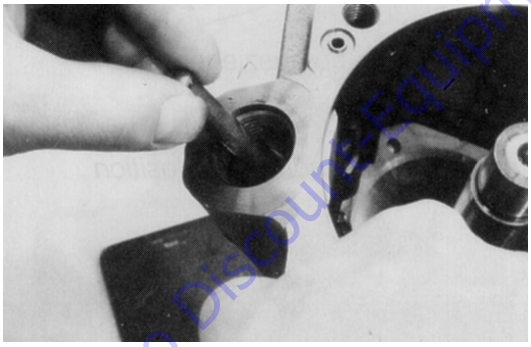

16. Disassembly of the swash plate.

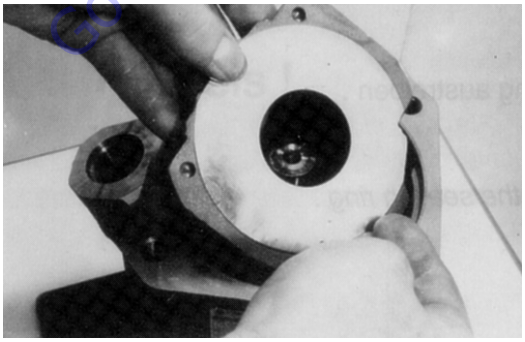

17. Remove the spring.

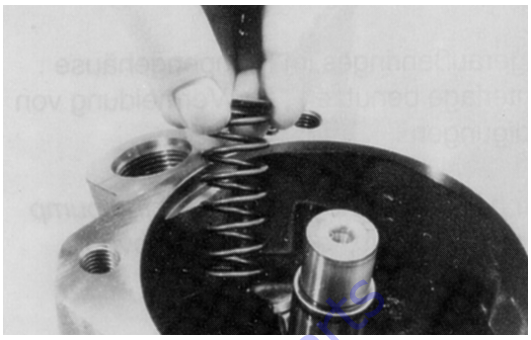

18. Remove both bearing shells.

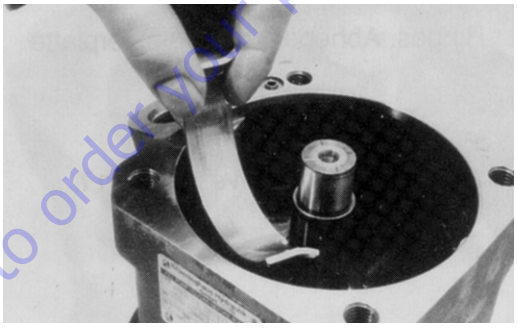

19. Remove the drive shaft.

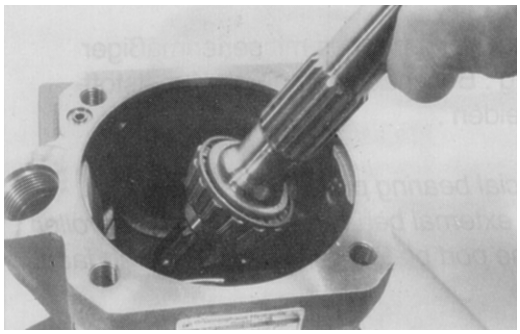

20. Remove the snap ring.

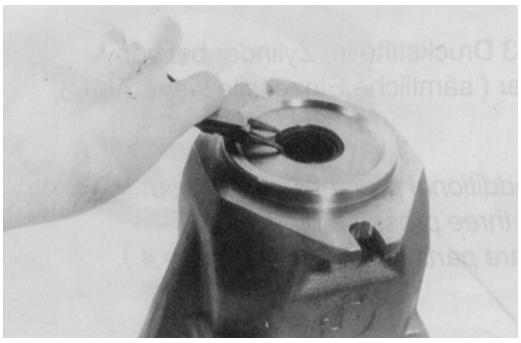

Go to Discount-Equipment.com to order your parts

21. Disassemble the sealing ring.

22. The external front bearing ring is pulled out of the pump housing.

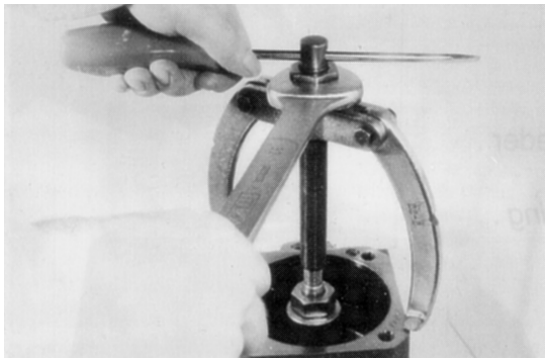

23. Remove the O-ring. Lifting of the valve plate isn't shown.

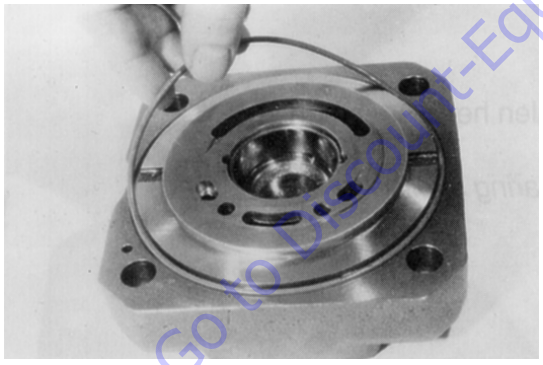

24. A usual commercial bearing puller is used to disassemble the external bearing ring of the taper roller bearing inside the port plate. Take care not to damage the surface of the port plate.

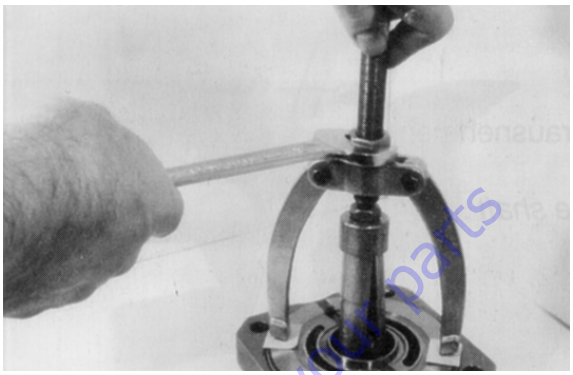

25. The spring has additional pretension while you disassemble the three pressure pins inside the cylinder.

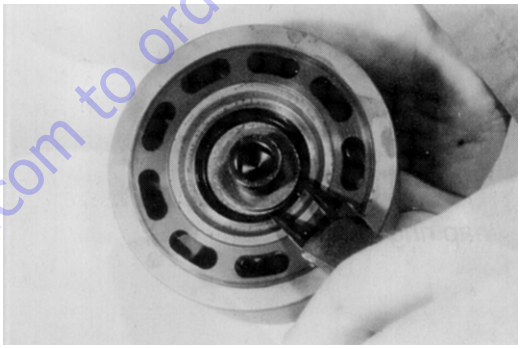

Go to Discount-Equipment.com to order your parts

Assembly Notes

1. Measurement of the taper roller bearing pretension.

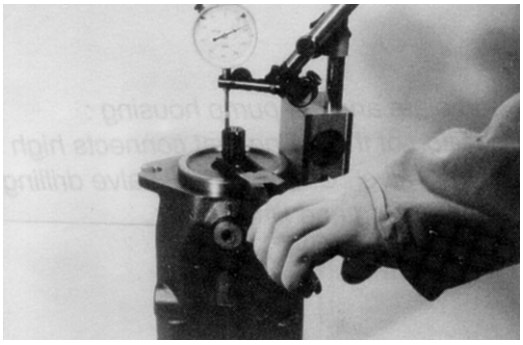

2. Note that there is a correct connection of the piston rod and the swash plate.

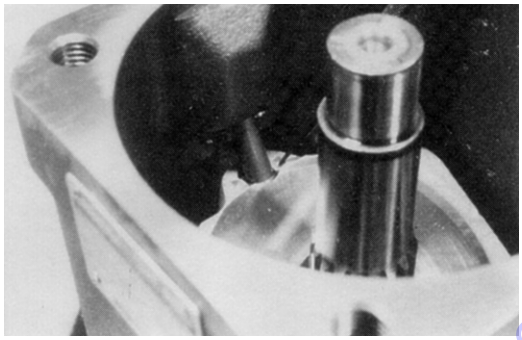

3. Pumps clockwise driven must have a position to the valve plate 4 degrees out of center in the same direction de-centered like drive direction.

NOTE: *Spare parts exist as cw and ccw valve plates.*

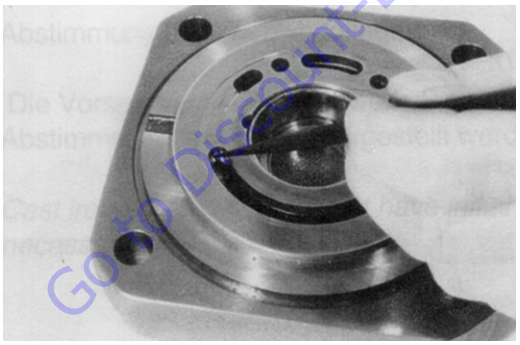

4. Pumps counterclockwise driven must have a position of the valve plate 4 degrees de-centered in ccw position.

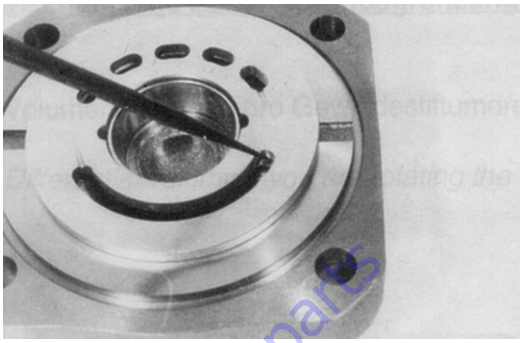

5. Assembly of the port plate and the pump housing: Note the correct position of the drilling that connects high pressure to the control valve. Check control valve drill position at the pump housing and fit together.

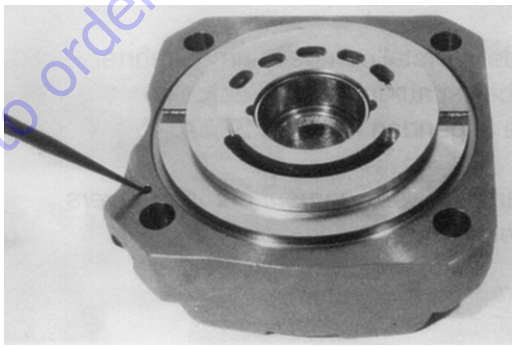

Taper Roller Bearing Initial Tension

Cast iron pump housing must have initial tension of the bearings: 0.....0,05 mm, grind Pos. 12 if necessary.

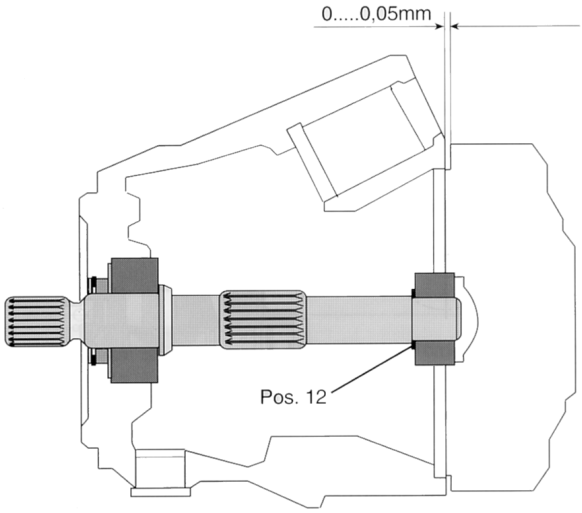

Go to Discount-Equipment.com to order your parts

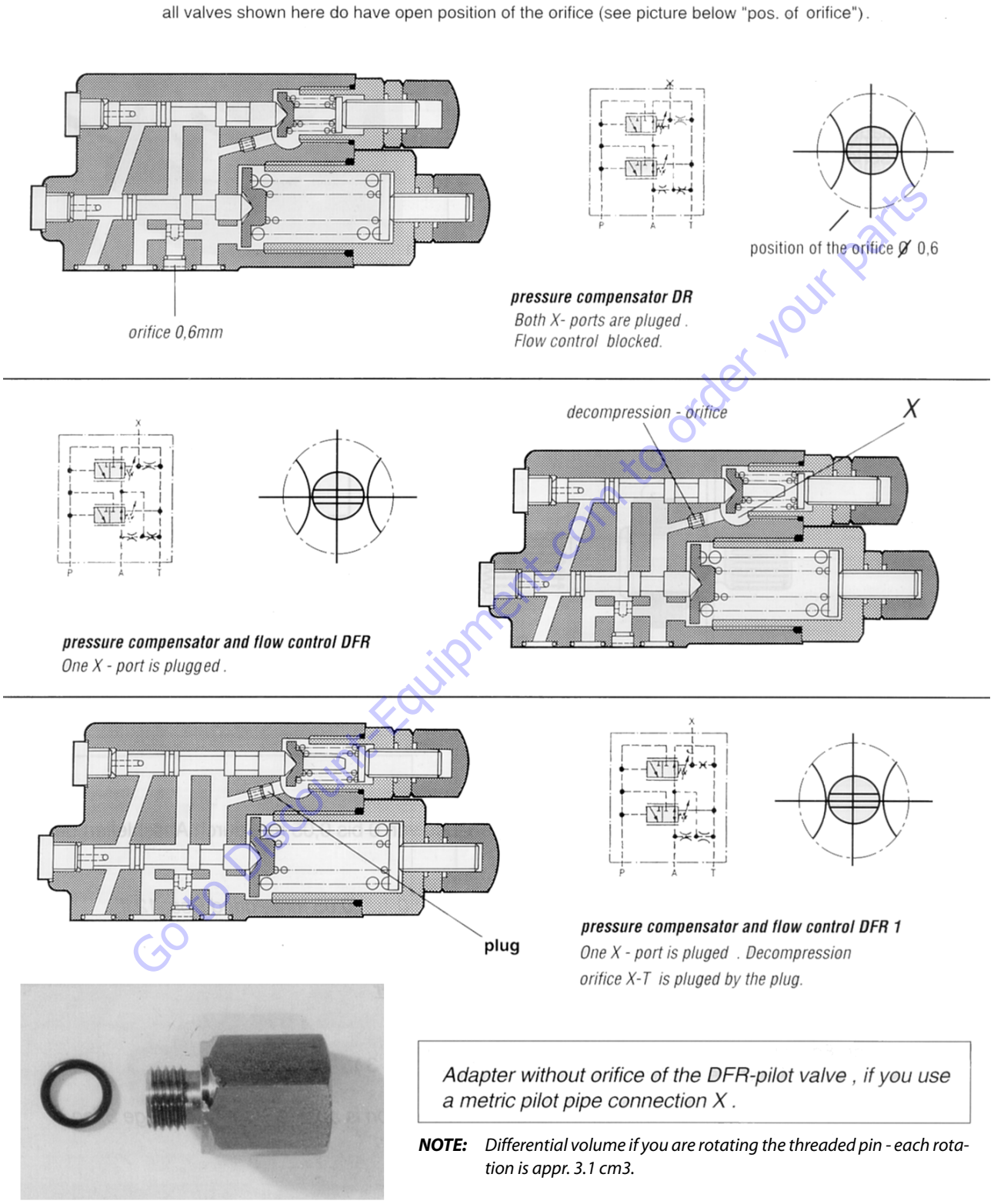

NOTE: *Differential volume if you are rotating the threaded pin - each rotation is appr. 3.1 cm3.*

Figure 3-12. Flow Control Pilot Valves

Go to Discount-Equipment.com to order your parts

Testing and Setup

DR: When pressure line is closed adjust the pressure of the controller (if it's DFR design then open the adjustable orifice and increase force of the spring - FR -).

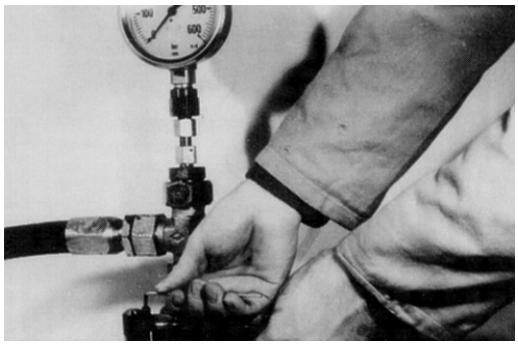

FR: If swivel angle is in the mid position adjust differential pressure 14 bar adjustable orifice is partly closed.

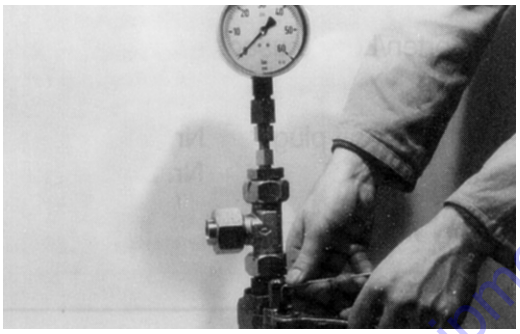

Mechanical flow limiter: While screwing in the threaded pin you will be able to reduce the flow from Vg max to 50% of Vg max.

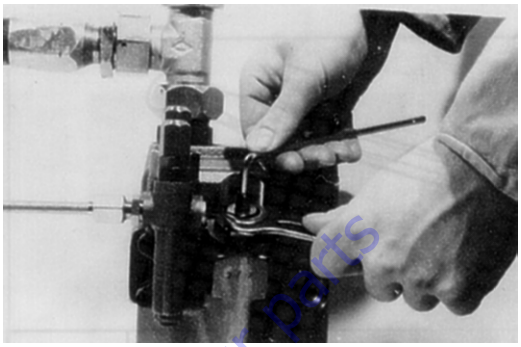

Drive Motor Adjustment Procedure (Prior to SN 0300138447)

1. Remove the cap nut from adjustment screw.
2. Loosen jam nut on the adjustment screw and make adjustment.
3. Measure from top of jam nut to the end of adjustment screw. Refer to Figure 3-13., Drive Motor Adjustment (Prior to SN 0300138447).
4. Tighten jam nut, install cap nut.

NOTE: *The o-ring must be seated in groove in cap nut.*

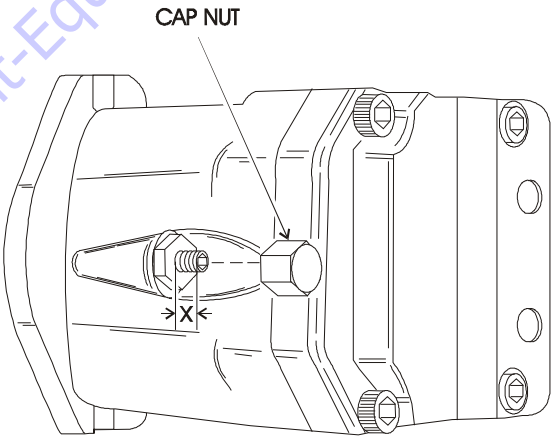

MODEL	"X" MEASUREMENT		DISPLACEMENT
	mm	inches	cu.in./rev
2-WD	8	0.319	1.425
4-WD	11	0.433	1.000

Figure 3-13. Drive Motor Adjustment (Prior to SN 0300138447)

Go to Discount-Equipment.com to order your parts

3.9 DRIVE MOTOR (SN 0300138447 THROUGH 0300185827)

Description

The drive motors are low to medium power, two-position axial piston motors incorporating an integral servo piston. They are designed for operation in both open and closed circuit applications. The standard control is a direct acting single line hydraulic control. The integral servo piston controls motor displacement.

The motors are spring biased to maximum displacement and hydraulically sh.ifted to minimum displacement. Minimum and maximum displacement can be set with fixed internal stops. The large diameter servo piston allows smooth acceleration and deceleration with relatively large circuit orificing.

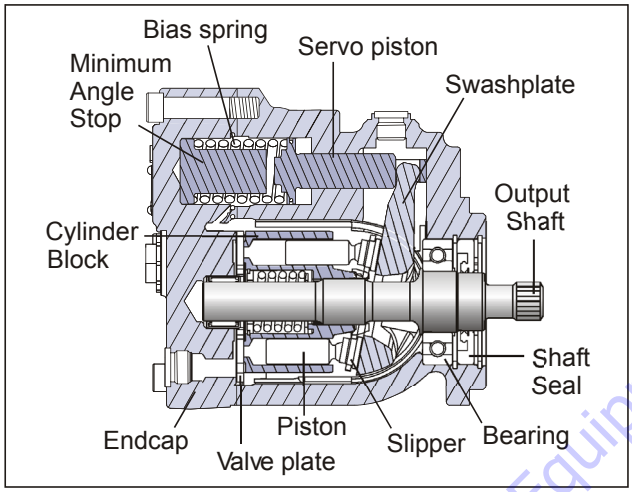

Figure 3-14. Drive Motor Cross Section

Shaft Seal Replacement

REMOVAL

1. Remove the snap ring (1) retaining the shaft seal and support washer.

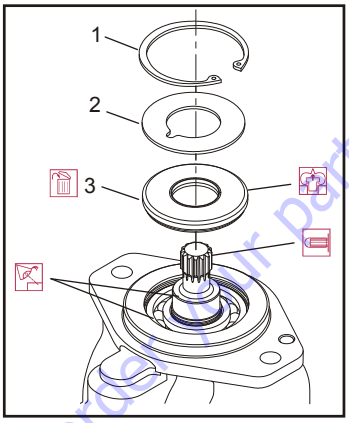

1. Snap Ring
2. Support Washer
3. Shaft Seal

Figure 3-15. Removing the Shaft Seal

2. Remove the support washer (2).
3. Carefully pry out the shaft seal (3).

   To avoid damaging the shaft during removal, install a large sheet metal screw into the chuck of a slide hammer. Drive the screw into the seal surface and use the slide hammer to pull the seal.

4. Discard the seal.

INSPECT THE COMPONENTS

Inspect the new seal, the motor housing seal bore, and the sealing area on the shaft for rust, wear, and contamination. Polish the shaft and clean the housing if necessary.

INSTALLATION

1. Cover the shaft splines with an installation sleeve to protect the shaft seal during installation.
2. Install a new shaft seal with the cupped side facing the motor. Press seal into housing until it bottoms out. Press evenly to avoid binding and damaging the seal.
3. Install seal support washer.
4. Install snap ring.
5. Remove the installation sleeve.

Go to Discount-Equipment.com to order your parts

Loop Flushing Valve

REMOVAL

1. Using a 11/16 in internal hex wrench remove plug (1) and (2).

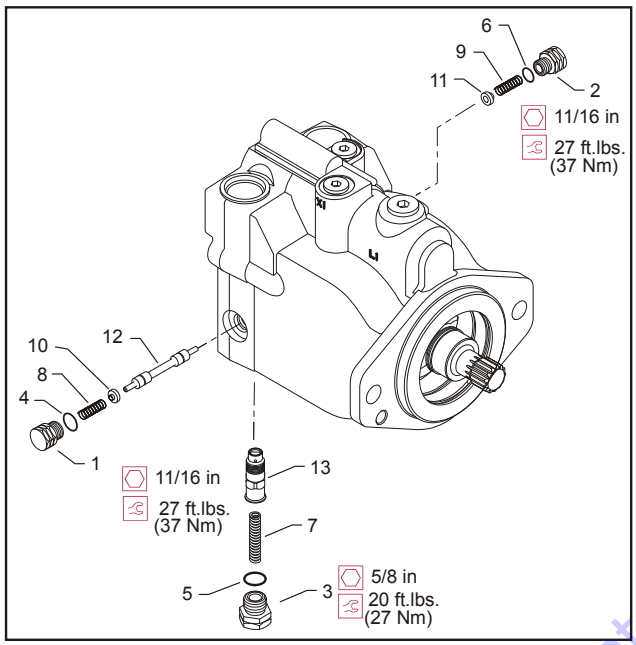

1. Plug
2. Plug
3. Plug
4. O-ring
5. O-ring
6. O-ring
7. Spring
8. Spring
9. Spring
10. Washer
11. Washer
12. Shift Spool
13. Orifice Poppet

Figure 3-16. Loop Flushing Spool

2. Using a 1/4 in hex wrench remove plug (3).
3. Remove O-rings (4, 5, and 6).
4. Using pliers, remove centering springs (7, 8, and 9).
5. Remove spring retaining washers (10 and 11).
6. Remove shift spool (12).
7. Remove orifice poppet (13).

INSPECT THE COMPONENTS

Inspect new o-rings and the sealing area for rust, wear, or contamination. Also check springs and poppet for wear.

INSTALLATION

1. Install orifice poppet (13).
2. Install shift spool (12).
3. Install spring retaining washers onto springs (10 and 11).
4. Carefully install centering springs (7, 8, and 9).
5. Install new o-rings (6, 4, and 5).
6. Using a 1/4 in. hex wrench torque plug (3) to 20 ft. lbs. (27 Nm).
7. Using a 11/16 in. internal hex, torque plugs (2 and 1) to 27 ft. lbs. (37 Nm).

Go to Discount Equipment.com to order your parts

Troubleshooting

Table 3-3. Excessive Noise and/or Vibration

Item	Description	Action
Check oil level in reservoir and oil supply to the motor.	Insufficient hydraulic fluid could lead to cavitation that would cause system noise.	Fill the reservoir to the proper level and ensure that oil supply to the motor is adequate and the lines are unobstructed.
Check for air in the system.	Air trapped within the system lines, or the motor itself, could result in cavitation that would cause system noise.	Ensure that all of the system lines and components are purged of air.
Inspect the output shaft couplings.	A loose or incorrect shaft coupling will produce vibrations that could result in system noise.	Ensure that the correct coupling is used and that it fits properly onto the shaft.
Inspect the output shaft alignment.	Misaligned shafts create excessive frictional vibration that could result in system noise.	Ensure that the shafts are properly aligned.
Hydraulic oil viscosity above limits.	Viscosity above acceptable limits will result in cavitation that would lead to system noise.	Replace hydraulic oil with appropriate fluid for operating conditions.

Table 3-4. System Operating Hot

Item	Description	Action
Check oil level in reservoir and oil supply to the pump.	Insufficient amount of hydraulic fluid will not meet the cooling demands of the system.	Fill the reservoir to the proper level.
Inspect the heat exchanger, (if so equipped).	If the heat exchanger fails, or becomes obstructed, it may not meet the cooling demands of the system.	Ensure that heat exchanger is receiving adequate air flow and that the heat exchanger is in good operating condition. Repair or replace as necessary.
Check the system relief valves.	If a system relief valve becomes unseated for an extended period of time or fails for any other reason, the system could become overheated.	Repair or replace any malfunctioning relief valves as applicable and verify that the loads on the machine are not excessive.

Table 3-5. Won't Shift or Slow to Start

Item	Description	Action
Check the signal line to the servo control port.	Obstructed or restricted flow through the servo control signal lines could result in slow shift or no shift conditions within the motor.	Ensure that the signal lines are not obstructed or restricted and that signal pressure is adequate to shift the motor.
Check that the correct supply and drain orifices are properly installed, and are not obstructed.	Supply and drain orifices determine the shift rate of the motor. The smaller the orifice, the longer the time it takes to shift the motor. Obstruction will also increase shift times.	Ensure that the proper control orifices are installed in the motor and verify that they are not obstructed. Clean or replace as necessary.

Go to Discount-Equipment.com to order your parts

Disassembly

NOTE: *Removal of the endcap voids warranty.*

During assembly, coat all moving parts with a film of clean hydraulic oil. This assures that these parts will be lubricated during start-up.

Replace all o-rings and gaskets.

It is recommended that all o-rings be replaced. Lightly lubricate all o-rings with clean petroleum jelly prior to assembly.

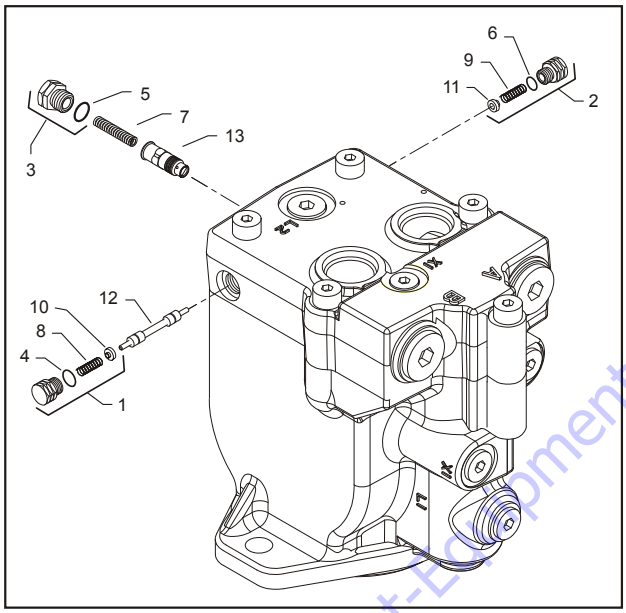

1. Plug
2. Plug
3. Plug
4. O-ring
5. O-ring
6. O-ring
7. Spring
8. Spring
9. Spring
10. Washer
11. Washer
12. Shift Spool
13. Orifice Poppet

Figure 3-17. Loop Flushing Spool

1. Using a 11/16 in wrench remove plug (1) and (2).

2. Using a 5/8 in hex wrench remove plug (3).

3. Remove o-rings (4, 5, and 6).

4. Using pliers, remove centering springs (7, 8, and 9).

5. Remove spring retaining washers (10 and 11).

6. Remove shift spool (12).

7. Remove orifice poppet (13).

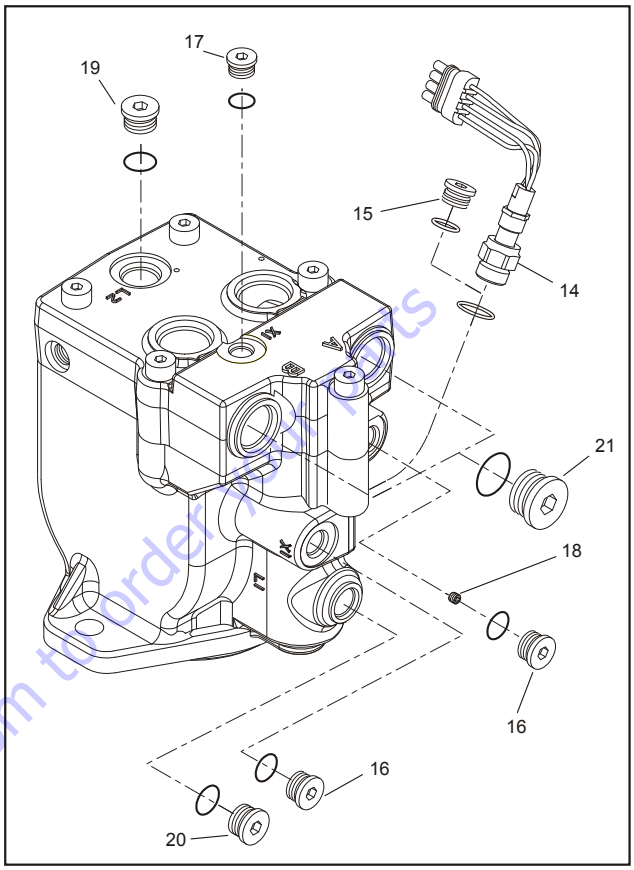

14. Lock Nut
15. O-ring Plug
16. Control Line Plug
17. Control Line Plug
18. Cavity Plug
19. Drain Plug
20. Drain Plug
21. Work Port Plug

Figure 3-18. Plugs, Fittings, and Speed Sensor

8. Remove all fittings from the unit. Discard any O-rings on the fittings.

9. Using an 11/16 in. hex wrench, loosen the speed sensor lock nut (14) if equipped. Then remove the speed sensor using a Vi in. hex wrench. Units without speed sensor have an o-ring plug (15) installed in that location; remove it with a Va in. internal hex wrench.

10. Using a 1/4 in. internal hex wrench, remove control line plugs (16, 17). Discard o-rings. Using a 3 mm hex wrench, remove cavity plug (18, if equipped with two-line control) from X2 cavity.

11. Using a 5/16 in. internal hex wrench, remove drain plugs (19, 20). Discard o-rings.

12. Using a 9/16 in. internal hex wrench, remove work port plugs (21, if equipped with axial ports). Discard o-rings.

Go to Discount-Equipment.com to order OEM parts

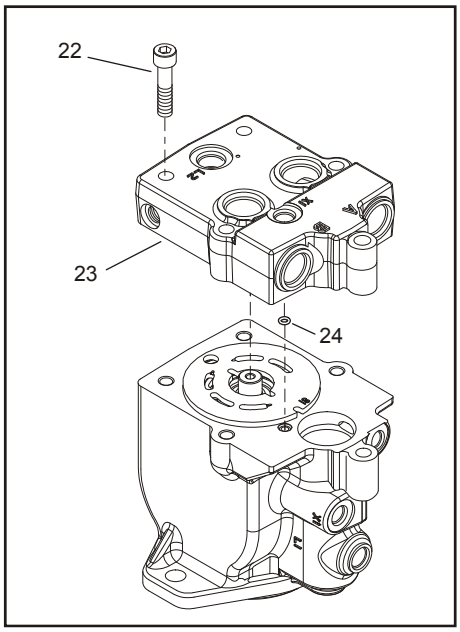

22. Screw
23. End Cap
24. O-ring

Figure 3-19. End Cap

13. Using an 8 mm internal hex wrench, remove the endcap screws (22).

14. Remove the endcap (23). Remove o-ring (24) from the housing or endcap.

When the endcap screws are removed, pressure from the servo spring will cause the endcap to bind on the shaft. Press down on the portion of the endcap covering the servo piston and hold the endcap level while removing.

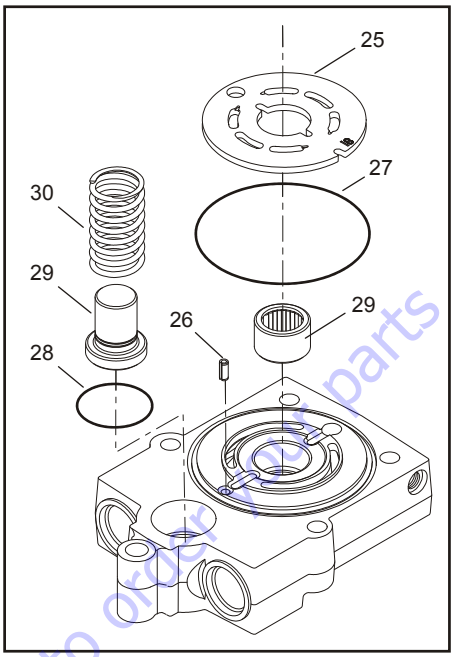

25. Valve Plate
26. End Cap
27. O-ring
28. O-ring
29. Angle Stop
30. Servo Spring

Figure 3-20. Valve Plate & Rear Shaft Bearing

NOTICE

TAKE CARE NOT TO SCRATCH THE SURFACE OF THE VALVE PLATE.

15. Remove the valve plate (25) and timing pin (26) from the endcap.

Each displacement has a unique valve plate. For identification, the last two digits of the valve plate part number are stamped on its surface.

16. Remove and discard the o-rings (27, 28).

17. Remove the rear shaft bearing (29) from the endcap with a bearing puller.

The bearing may be difficult to remove with a puller. Try this as an alternative: Pack the bearing cavity with heavy grease. After the shaft is removed, insert it into the bearing cavity and tap lightly with a soft mallet on the splined end. The grease will force the bearing out. Use caution not to drive the bearing past the rear shaft journal as the bearing may become trapped on the shaft and damaged.

Go to Discount-Equipment.com to order your parts

18. Remove minimum angle stop (29) and servo spring (30) from the housing.

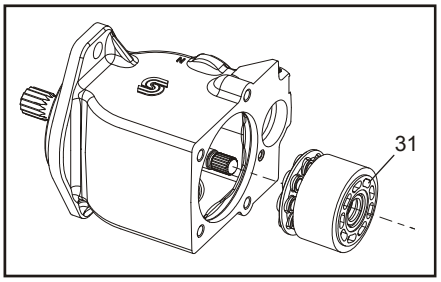

31. Cylinder Kit Assembly

Figure 3-21. Cylinder Kit

19. Turn the housing on its side and remove the cylinder kit assembly (31). Set the assembly aside, being careful not to scratch the running surface.

NOTE: *Grooves on the surface of the cylinder kit identify its displacement:*

Table 3-6. Displacement Identifiers

# of Grooves	Frame L	Frame K
1	25	38
2	30	45
3	35	--

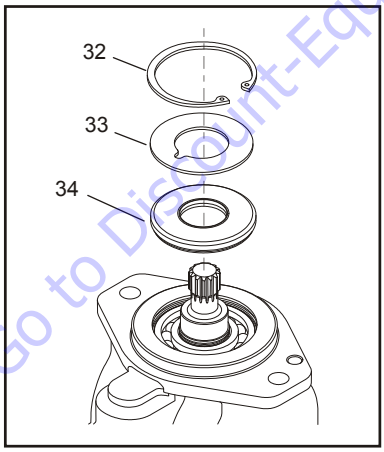

32. Snap Ring
33. Support Washer
34. Shaft Seal

Figure 3-22. Shaft Seal

20. Turn the housing over and remove the snap ring (32) retaining the shaft seal and support washer. Remove the support washer (33) and carefully pry out the shaft seal (34). Discard the seal.

To avoid damaging the shaft during seal removal. Install a large sheet metal screw into the chuck of a slide hammer. Drive the screw into the seal surface and use the slide hammer to pull the seal.

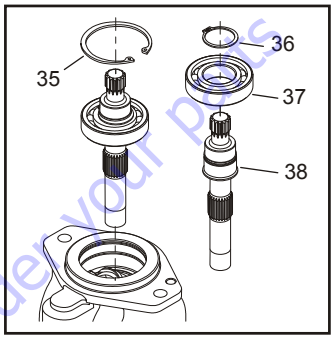

35. Inner Snap Ring
36. Snap Ring
37. Bearing
38. Shaft

Figure 3-23. Shaft & Front Bearing

21. Remove the inner snap ring (35) and the shaft / bearing assembly.

22. Remove the snap-ring (36) retaining the shaft front bearing. Pull the bearing (37) off of the shaft (38).

Go to Discount-Equipment.com to order your parts

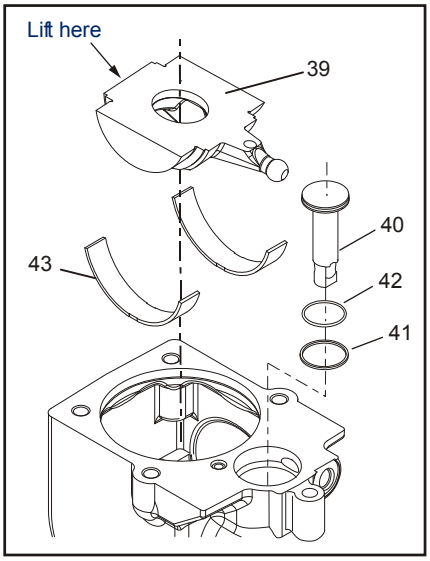

39. Swashplate
40. Servo Piston
41. Piston Seal
42. O-ring
43. Journal Bearings

Figure 3-24. Swash Plate & Servo Piston

23. Turn housing over and remove the swashplate (39) by lifting on the end opposite the servo lever.

24. Remove the servo piston (40). Remove the piston seal (41) and o-ring (42) from the servo piston. Discard the seal and o-ring.

25. Remove the journal bearings (43) from the housing. If the bearings are to be reused, note the location and orientation of each bearing for reassembly.

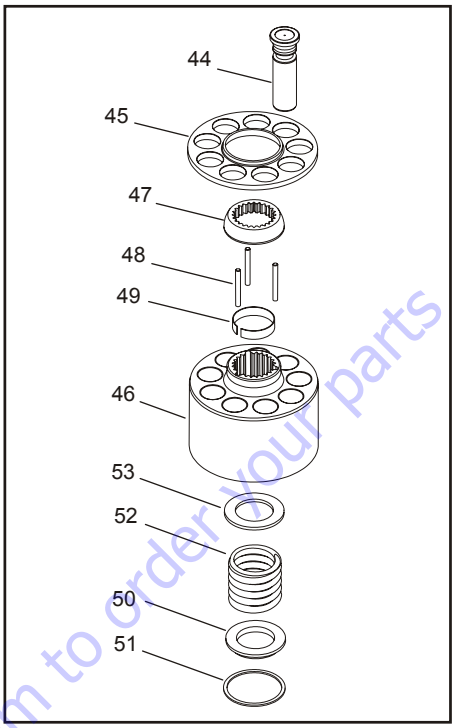

44. Piston
45. Slipper Retainer
46. Cylinder Block
47. Ball Guide
48. Holddown Pins
49. Retaining Ring
50. Block Spring Washer
51. Spiral Retaining Ring
52. Block Spring
53. Inner Block Spring Washer

Figure 3-25. Cylinder Kit Disassembly

26. Remove pistons (44) and slipper retainer (45) from the cylinder block (46).

The pistons are not selectively fitted, however units with high hourly usage may develop wear patterns. Number the pistons and bores for reassembly if they are to be reused.

27. Remove the ball guide (47), hold-down pins (48), and retaining ring (49) from the cylinder block.

NOTE: *Most repairs do not require block spring removal. Perform this procedure only if you suspect problems with the block spring.*

⚠ WARNING

RISK OF PERSONAL INJURY: COMPRESSING THE BLOCK SPRING REQUIRES FORCE OF ABOUT 80 TO 90 LBF (350 TO 400 N). USE A PRESS SUFFICIENT TO MAINTAIN THIS FORCE WITH REASONABLE EFFORT. ENSURE THE SPRING IS SECURE BEFORE ATTEMPTING TO REMOVE THE SPIRAL RETAINING RING. RELEASE THE PRESSURE SLOWLY AFTER THE RETAINING RING IS REMOVED.

Go to Discount-Equipment.com to order your parts

28. Turn the block over. Using a press, apply pressure on the block spring washer (50) to compress the block spring. Compress the spring enough to safely remove the spiral retaining ring (51). While maintaining pressure, unwind the spiral retaining ring (51). Carefully release the pressure and remove the outer block spring washer (50), block spring (52), and inner block spring washer (53) from the cylinder block.

Inspection

After disassembly, wash all parts (including the end-cap and housing) thoroughly with clean solvent and allow to air dry. Blow out oil passages in the housing and endcap with compressed air. Conduct inspection in a clean area and keep all parts free from contamination. Clean and dry parts again after any rework or resurfacing.

PISTON

Inspect the pistons for damage and discoloration. Discolored pistons may indicate excessive heat; do not reuse.

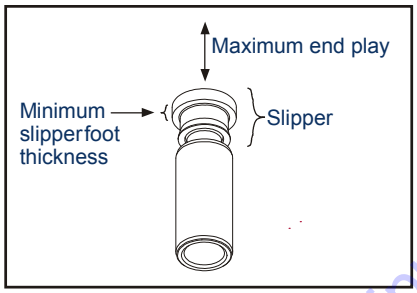

SLIPPERS

Inspect the running surface of the slippers. Replace any piston assemblies with scored or excessively rounded slipper edges. Measure the slipper foot thickness. Replace any piston assemblies with excessively worn slippers. Check the slipper axial end-play. Replace any piston assemblies with excessive end-play.

Minimum slipper foot thickness and maximum axial end-play are given in the table below.

Table 3-7. Slipper Foot Thickness & End Play

Measurement		L Frame	K Frame
Slipper Foot Thickness	mm (in.)	2.71 (0.11)	4.07 (0.16)
Piston/Slipper End Play		0.15 (0.006)	

CYLINDER BLOCK

Measure the cylinder block height. Replace blocks worn beyond the minimum height specification. Inspect the running surface of the cylinder block. Replace or resurface worn or scratched blocks. Blocks may be resurfaced to the specifications shown in the drawing, provided resurfacing will not reduce the block height below the minimum specification. Table 3-8, Cylinder Block Measurements.

Go to Discount-Equipment.com to order your parts

Table 3-8. Cylinder Block Measurements

Measurement	L25	L30	L35	K38	K45
Minimum Cylinder Block Height (A)	50.8 (2.00)	50.8 (2.00)	50.8 (2.00)	54.4 (2.14)	54.4 (2.14)
Cylinder Block Surface Flatness	0.002 (0.0000079)	0.002 (0.0000079)	0.002 (0.0000079)	0.002 (0.0000079)	0.002 (0.0000079)

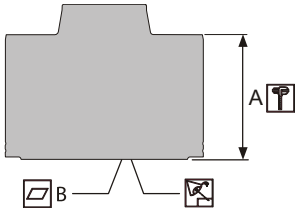

BALL GUIDE AND SLIPPER RETAINER

Inspect the ball guide and slipper retainer for damage, discoloration, or excessive wear. A discolored ball guide or slipper retainer indicates excessive heat. Do not reuse.

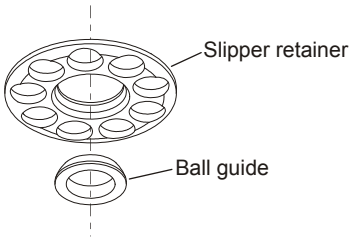

VALVE PLATE

The condition of the valve plate is critical to the efficiency of the motor. Inspect the valve plate surfaces carefully for excessive wear, grooves, or scratches. Replace or resurface grooved or scratched valve plates. Measure the valve plate thickness and replace if worn beyond the minimum specification. Valve plates may be resurfaced to the specifications shown in the drawing, provided resurfacing will not reduce the thickness below the minimum specification.

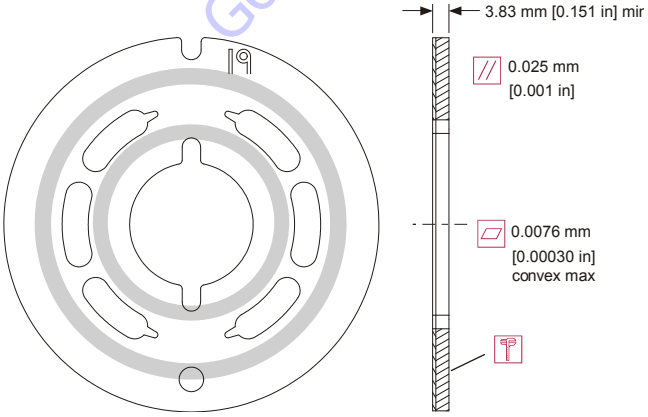

SWASHPLATE AND JOURNAL BEARINGS

Inspect the running face, servo ball-joint, and swashplate journal surfaces for damage or excessive wear. Some material transfer may appear on these surfaces and is acceptable providing the surface condition meets specifications shown. Measure the swashplate thickness from the journals to the running face. Replace swashplate if damaged or worn beyond minimum specification. Replace swashplate if the difference in thickness from one side to the other exceeds specification.

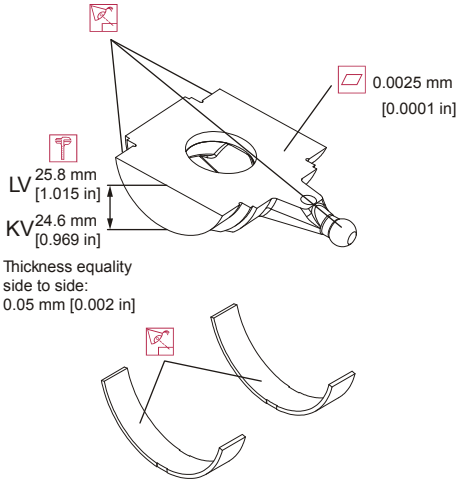

Inspect the journal bearings for damage or excessive wear. Replace journal bearings if scratched, warped, or excessively worn. The polymer wear layer must be smooth and intact.

Go-To Discount-Equipment.com to order your parts

SHAFT BEARINGS

Inspect bearings for excessive wear or contamination. Rotate the bearings while feeling for uneven movement. Bearings should spin smoothly and freely. Replace bearings that appear worn or do not rotate smoothly.

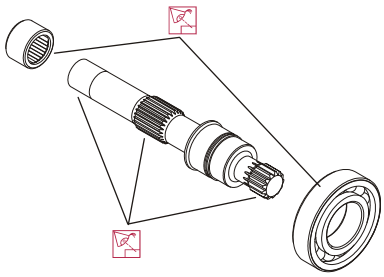

SHAFT

Inspect the motor shaft. Look for damage or excessive wear on the output and block splines. Inspect the bearing surfaces and sealing surface. Replace shafts with damaged or excessively worn splines, bearing surfaces, or sealing surfaces.

SERVO PISTON AND MINIMUM ANGLE STOP

Inspect the minimum angle stop, servo piston head, and servo piston ball-socket for damage or excessive wear. Replace if necessary.

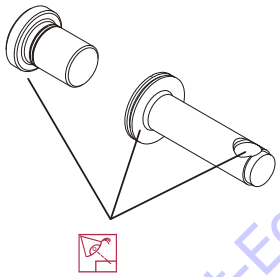

LOOP FLUSHING SPOOL

Inspect the loop flushing spool. Check for cracks or damage. Replace if necessary.

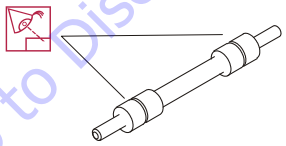

Assembly

1. Install new O-ring (1) and piston seal (2) to the servo piston (3). Install the piston seal over the O-ring.

   Installing the piston seal stretches it, making it difficult to install the servo piston in its bore. Allow 30 minutes for the seal to relax after installation. To speed up seal relaxation, compress the seal by installing the piston head into the servo cavity in the end-cap and let it stand for at least five minutes.

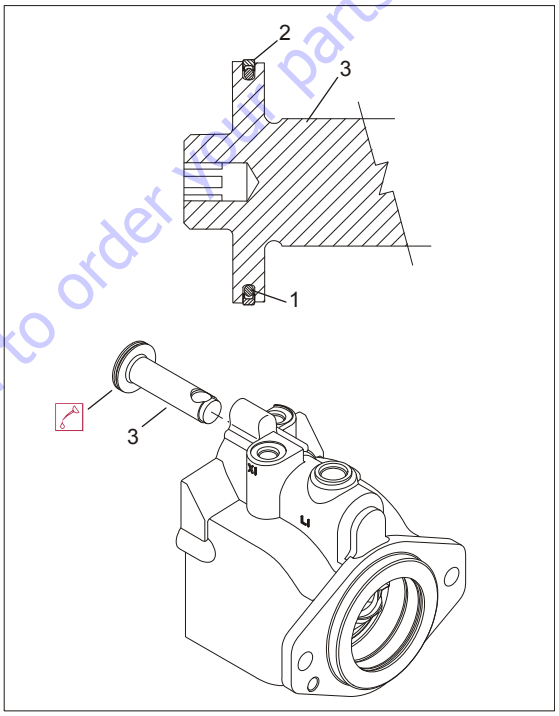

1. O-ring
2. Piston Seal
3. Servo Piston

Figure 3-26. Servo Piston

2. After piston seal has relaxed, lubricate and install servo piston into the housing bore. Align the piston with the ball socket facing the inside of the housing.

Go to Discount-Equipment.com to order your parts

⚠ WARNING

RISK OF PERSONAL INJURY: COMPRESSING THE BLOCK SPRING REQUIRES ABOUT 80 TO 90 LBF (350 TO 400 N) OF FORCE. USE A PRESS SUFFICIENT TO MAINTAIN THIS FORCE WITH REASONABLE EFFORT. ENSURE THE SPRING IS SECURE BEFORE ATTEMPTING TO INSTALL THE SPIRAL RETAINING RING. RELEASE THE PRESSURE SLOWLY AFTER THE RETAINING RING IS INSTALLED.

3. Install the inner block spring washer (4), block spring (5), and outer washer (6) into the cylinder block. Using a press, compress the block spring enough to expose the retaining ring groove. Wind the spiral retaining ring (7) into the groove in the cylinder block.

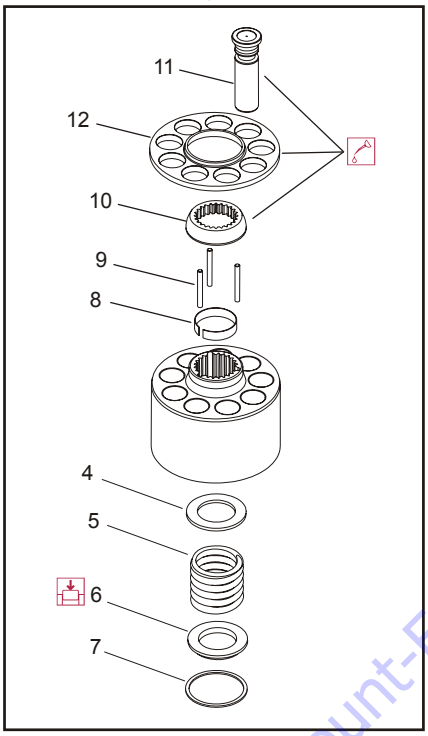

4. Block Spring Washer
5. Block Spring
6. Outer Washer
7. Spiral Retaining Ring
8. Retaining Ring
9. Holddown Pins
10. Ball Guide
11. Piston
12. Slipper Retainer

Figure 3-27. Cylinder Kit Assembly

4. Turn the block over and install the retaining ring (8), hold-down pins (9), and ball guide (10) to the cylinder block.

5. Install the pistons (11) to the slipper retainer (12). Install the piston/retainer assembly into the cylinder block. Ensure the concave surface of the retainer seats on the ball guide. If you're reusing the pistons, install them to the original block bores. Lubricate the pistons, slippers, retainer, and ball guide before assembly. Set the cylinder kit aside on a clean surface until needed.

6. Install the journal bearings (13) into the housing seats. Use assembly grease to keep the bearings seated during assembly. Ensure the locating nubs drop into the cavities in the seats. If you're reusing the bearings, install them in the original location and orientation. Lubricate the journal bearings.

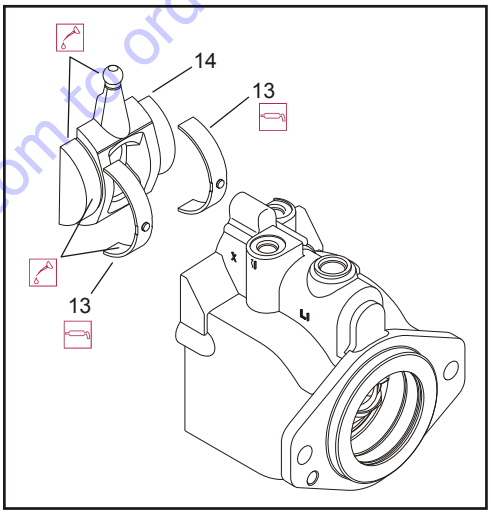

13. Journal Bearings
14. Swash Plate

Figure 3-28. Swash Plate and Journal Bearing

7. Install the swashplate (14) into the housing. Tilt the swashplate and guide the servo lever ball into its socket in the servo piston rod. Ensure the swashplate seats into the journal bearings and moves freely. Lubricate the running surface of the swashplate.

Go to Discount-Equipment.com to order your parts

8. Press front shaft bearing (15) onto shaft (16). Press bearing onto shaft with lettering facing out. Lubricate bearing rollers. Install snap-ring (17) onto shaft.

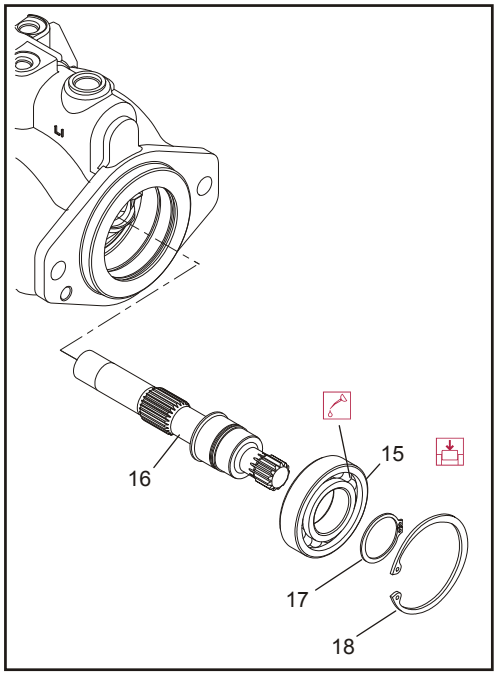

15. Front Shaft Bearing
16. Shaft
17. Snap Ring
18. Snap Ring

Figure 3-29. Shaft and Front Bearing

9. While holding the swashplate in place, turn the housing on its side. Install the install shaft/bearing assembly into housing from the flange end. Install the snap-ring (18).

10. Verify swashplate and bearings are properly seated. Install the cylinder kit (19) onto the shaft. Install with the slippers facing the swashplate. Rock the shaft to align the block splines and slide the cylinder kit into place. Orient the motor with the shaft pointing downward and verify the cylinder kit, swashplate, journal bearings, and servo piston are all secure and properly installed.

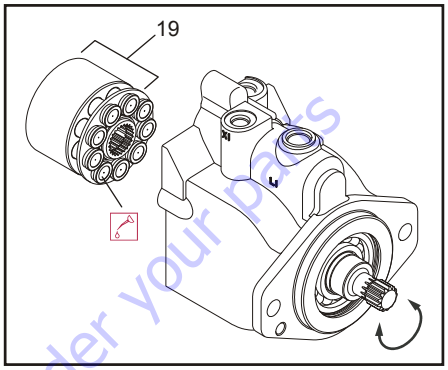

19. Cylinder Kit

Figure 3-30. Cylinder Kit Installation

11. Lubricate and install the servo spring (20), and minimum angle stop (21) into the housing bore.

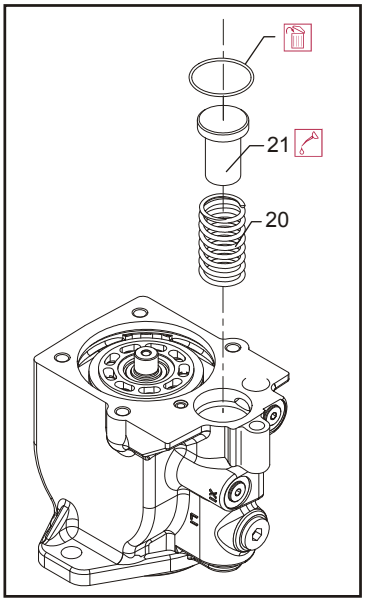

20. Servo Spring
21. Minimum Angle Stop

Figure 3-31. Servo Spring and Minimum Angle Stop

Go to Discount Equipment.com to order your parts

12. Press the rear shaft bearing (22) into the endcap. Install the bearing with letters facing out. Press until bearing surface is 0.08 ±0.01 in (2 ±0.25 mm) above endcap surface.

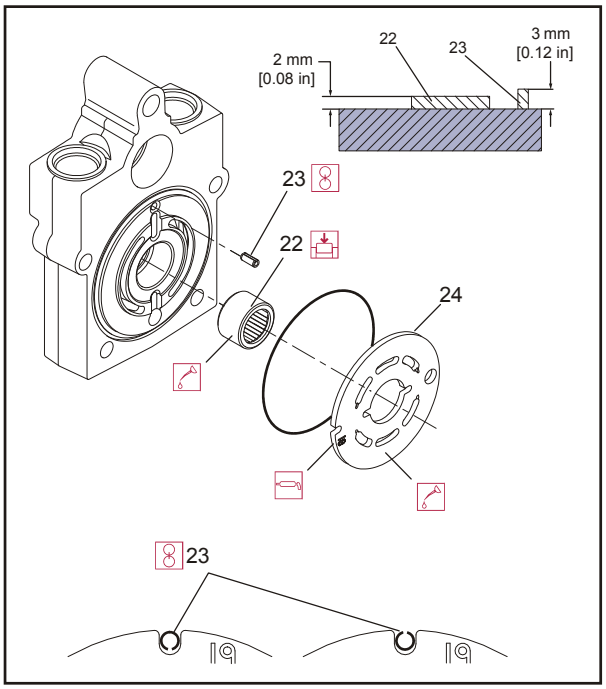

22. Rear Shaft Bearing
23. Timing Pin
24. Valve Plate

Figure 3-32. Valve Plate and Rear Bearing

13. Install timing pin (23) into its bore in the endcap. Install the pin with its groove facing toward or away from the shaft. Press the pin until the end protrudes 0.12 ±0.01 in (3 ±0.25 mm) above endcap surface.

14. Install the valve plate (24) onto the endcap. Install the valve plate with the yellow surface toward the cylinder block. Align the slot in the valve plate with the timing pin. Apply a liberal coat of assembly grease to the endcap side of the valve plate to keep it in place during installation.

15. Install the endcap (25) onto the housing with the endcap screws (26). Check to ensure the endcap will properly seat onto the housing without interference. Improper assembly of the internal components may prevent the endcap from seating properly. Ensure the o-rings seat properly when installing the endcap.

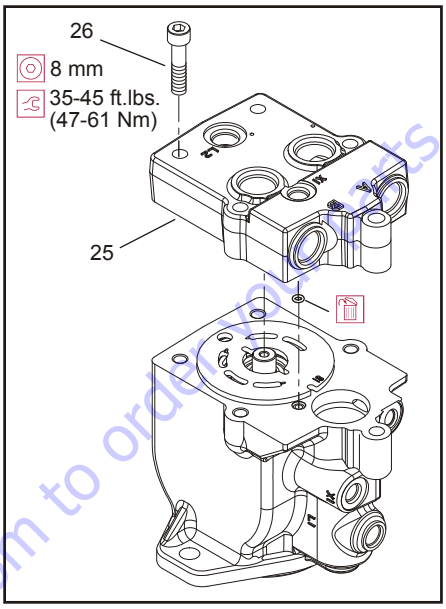

25. End Cap
26. Screw

Figure 3-33. End Cap

16. Using an 8 mm internal hex wrench, tighten the endcap screws. Tighten the screws in opposite corners slowly and evenly to compress the servo spring and properly seat the endcap. Torque endcap screws 35-45 ft. lbs. (47-61 Nm).

17. Before installing the shaft seal, ensure the shaft turns smoothly with less than 120 in. lbs. (13.5 Nm) of force. If the shaft does not turn smoothly within the specified maximum force, disassemble and check the unit.

Go to Discount-Equipment.com to order parts

18. Cover shaft splines with an installation sleeve. Install a new shaft seal (27) with the cup side facing the motor. Press seal into housing until it bottoms out. Press evenly to avoid binding and damaging the seal. Install seal support washer (28) and snap ring (29).

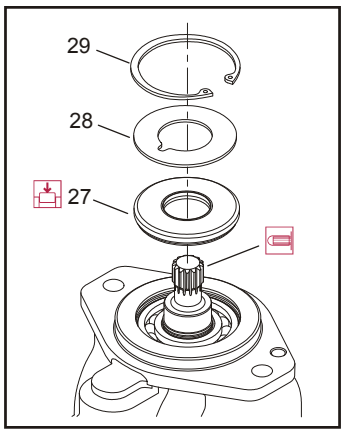

27. Shaft Seal
28. Seal Support Washer
29. Snap Ring

Figure 3-34. Shaft Seal

19. Install remaining plugs and fittings to the housing. Refer to the drawing below for wrench sizes and installation torques.

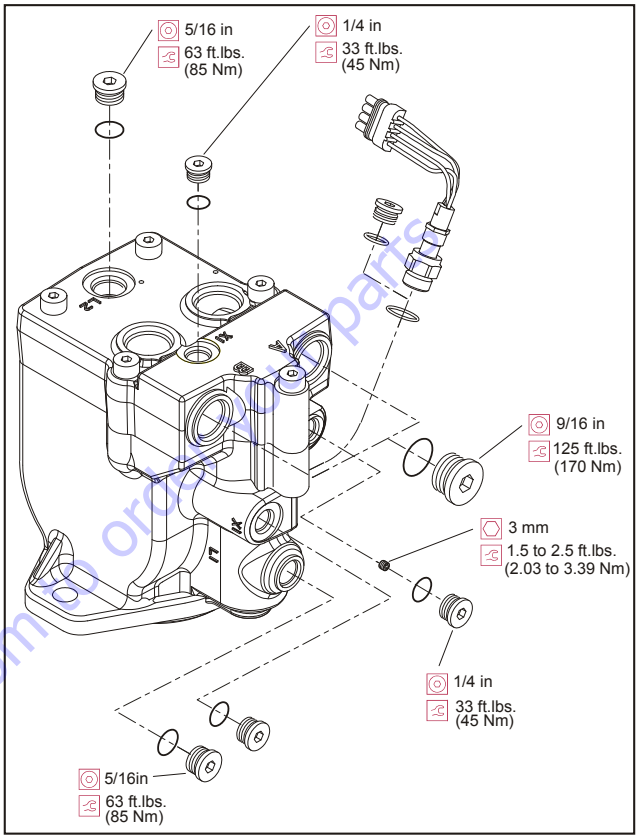

Figure 3-35. Plugs and Fittings Installation

Go to Discount-Equipment.com to order parts

20. Install orifice poppet (30).

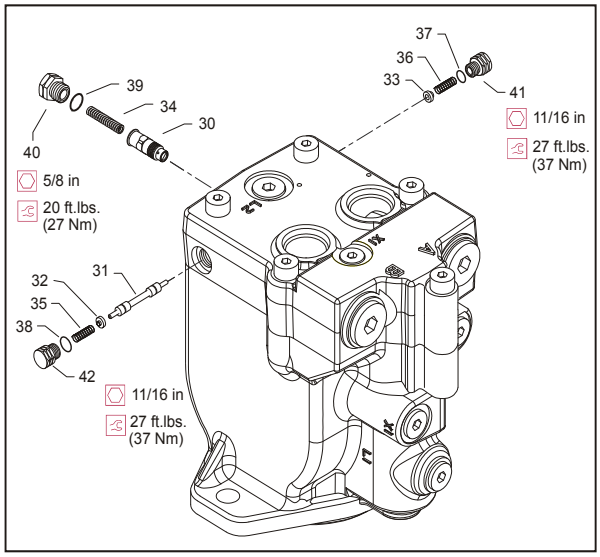

30. Orifice Poppet	34. Spring	37. O-ring	40. Plug
31. Shift Spool	35. Spring	38. O-ring	41. Plug
32. Spring	36. Spring	39. O-ring	42. Plug
33. Spring			

Figure 3-36. Loop Flushing Spool

21. Install shift spool (31).

22. Install spring retaining washers onto springs (32 and 33).

23. Carefully install centering springs (34, 35, and 36).

24. Install new o-rings (37, 38, and 39).

25. Using a 5/8 in. wrench torque plug (40) to 20 ft. lbs. (27 Nm).

26. Using a 11/16 in. wrench, torque plugs (41 and 42) to 27 ft. lbs. (37 Nm).

Initial Start-up Procedures

Follow this procedure when starting-up a new motor or when installing a motor that has been removed.

Prior to installing the motor, inspect for damage incurred during shipping. Make certain all system components (reservoir, hoses, valves, fittings, heat exchanger, etc.) are clean prior to filling with fluid.

1. Fill the reservoir with recommended hydraulic fluid. Always filter fluid through a 10 micron filter when pouring into the reservoir. Never reuse hydraulic fluid.

2. Fill the inlet line leading from the pump to the reservoir. Check the inlet line for properly tightened fittings and be certain it is free of restrictions and air leaks.

3. Fill the pump and motor housing with clean hydraulic fluid. Pour filtered oil directly into the upper most case drain port.

4. To ensure the pump and motor stay filled with oil, install case drain lines into the upper most case drain ports.

5. Install a 0 to 500 psi (0 to 35 bar) gauge in the charge pressure gauge port of the pump to monitor system pressure during start up.

6. While watching the pressure gauge, run the engine at the lowest possible speed until system pressure builds to normal levels (minimum 160 psi (11 bar)). Once system pressure is established, increase to full operating speed. If system pressure is not maintained, shut down the prime mover, determine cause, and take corrective action.

7. Operate the hydraulic system for at least fifteen minutes under light load conditions.

8. Check and adjust control settings as necessary after installation.

9. Shut down the prime mover and remove the pressure gauge. Replace plug at the charge pressure gauge port.

10. Check the fluid level in the reservoir; add clean filtered fluid if necessary. The motor is now ready for operation.

Go to Discount-Equipment.com to order your parts

3.10 SWING BEARING

Turntable Bearing Mounting Bolt Condition Check

NOTICE

THE SWING BEARING IS ONE OF THE MOST CRITICAL POINTS ON AN AERIAL LIFT. IT IS HERE THAT THE STRESSES OF LIFTING ARE CONCENTRATED, AT THE CENTER OF ROTATION. BECAUSE OF THIS, PROPER MAINTENANCE OF THE SWING BEARING BOLTS IS A MUST FOR SAFE OPERATION.

NOTE: *This check is designed to replace the existing bearing bolt torque checks on JLG Lifts in service. This check must be performed after the first 50 hours of machine operation and every 600 hours of machine operation thereafter. If during this check any bolts are found to be missing or loose, replace missing or loose bolts with new bolts and torque to the value specified in the torque chart, after lubricating the bolt threads with JLG Threadlocker P/N 0100019. After replacing and retorquing bolt or bolts recheck all existing bolts for looseness.*

1. Check the frame to bearing attach bolts as follows:
   - **a.** Elevate the fully extended main boom to horizontal. (See Figure 3-38.)
   - **b.** At the positions indicated on Figure 3-39., try to insert a.0015 feeler gauge between the bolt and hardened washer at the arrow indicated position.
   - **c.** Ensure that the 0.0015" feeler gauge will not penetrate under the bolt head to the bolt shank.
   - **d.** Swing the turntable 90 degrees, and check some selected bolts at the new position.
   - **e.** Continue rotating the turntable at 90 degrees intervals until a sampling of bolts have been checked in all quadrants.
2. Check the turntable to bearing Attach bolts as follows:
   - **a.** Elevate the fully retracted main boom to full elevation.
   - **b.** At the position indicated on Figure 3-37., try to insert the 0.0015" feeler gauge between the bolt head and hardened washer at the arrow indicated position.
   - **c.** Lower the boom to horizontal and fully extend the boom.
   - **d.** At the position indicated on Figure 3-39., try and insert the 0.0015" feeler gauge between the bolt head and hardened washer at the arrow indicated position.

Go to DiscountEquipment.com to order your parts

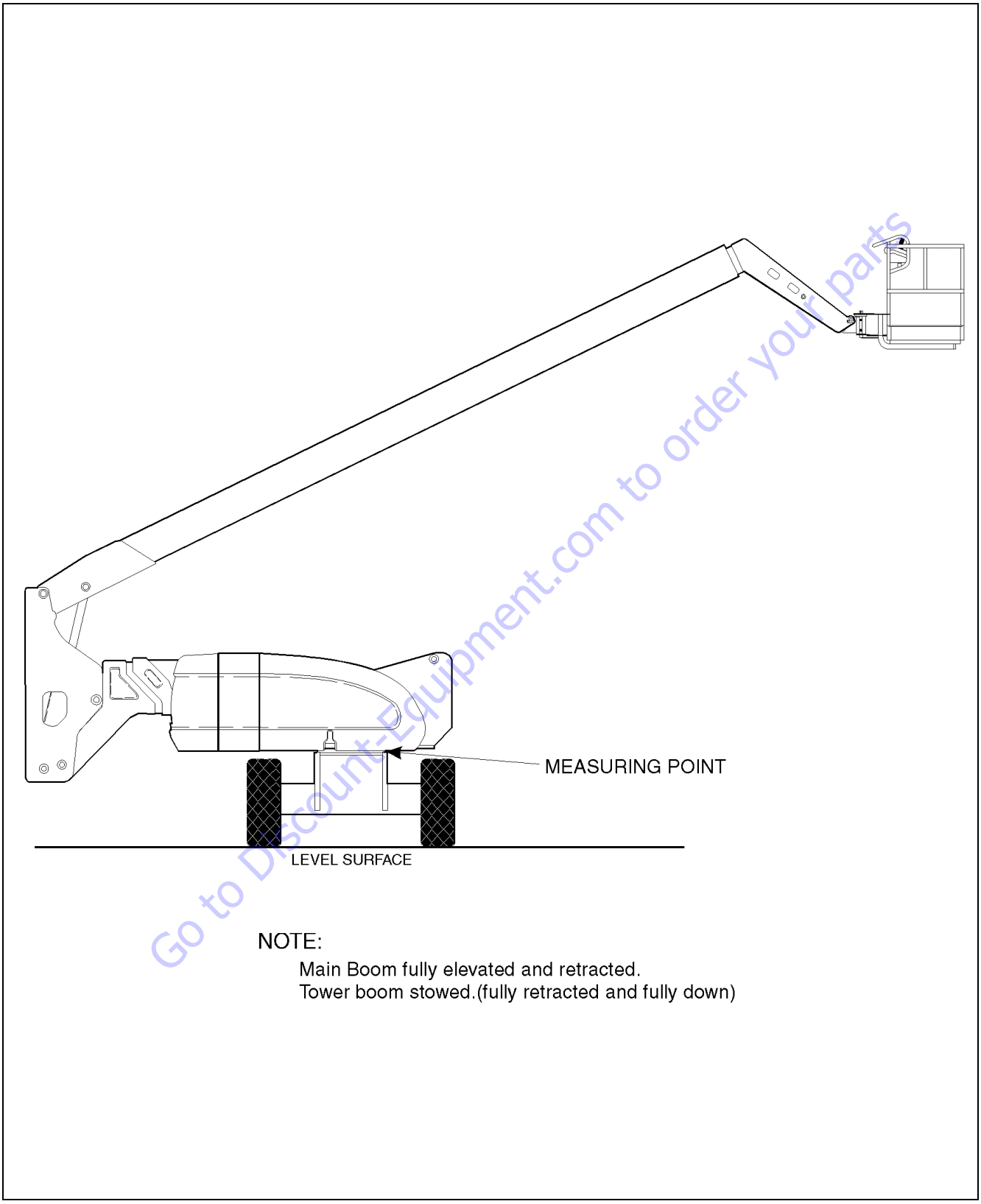

Go to Discount-Equipment.com to order your parts

Figure 3-37. Swing Bearing Tolerance Boom Placement - (Sheet 1 of 2)

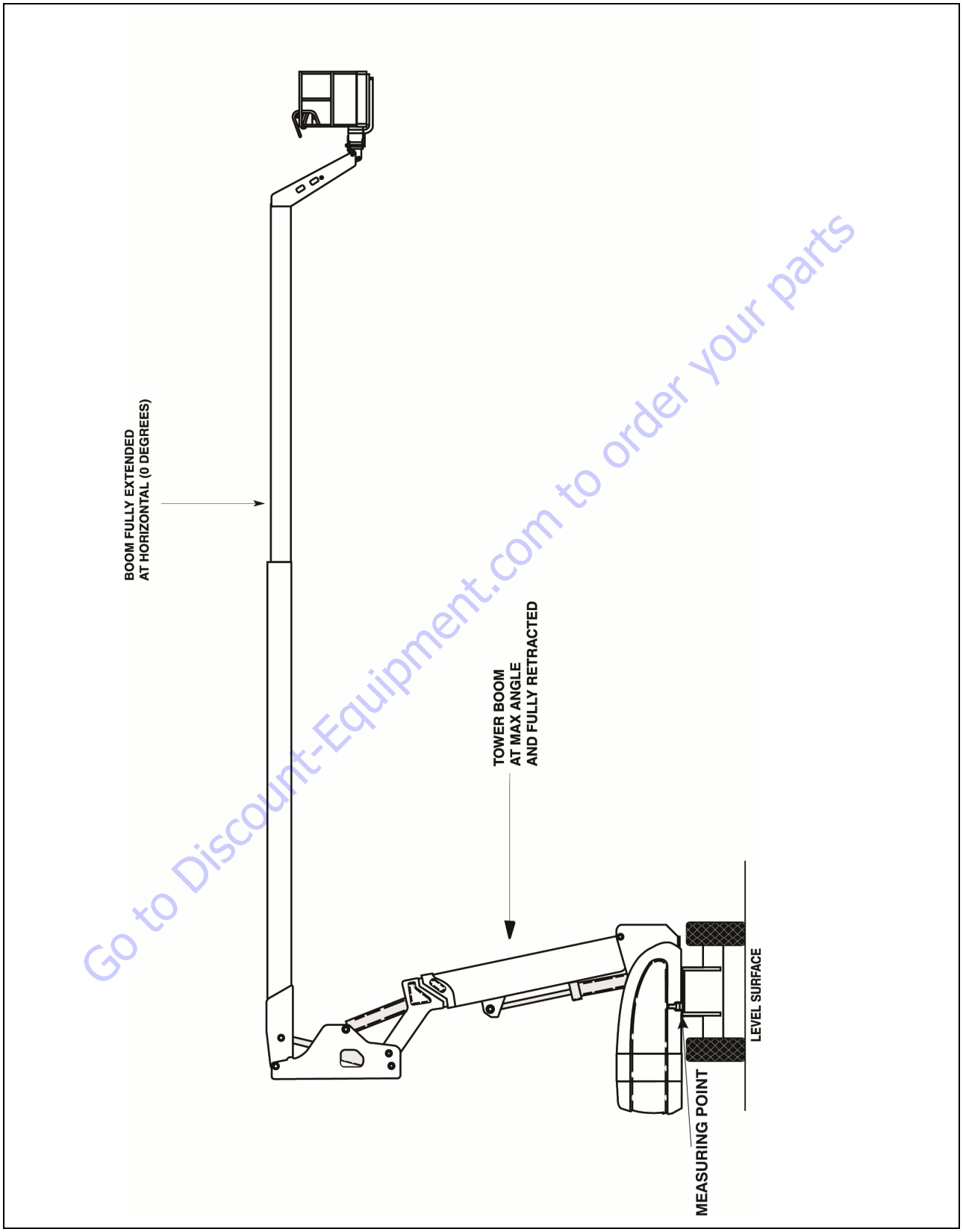

Go to Discount-Equipment.com to order your parts

Figure 3-38. Swing Bearing Tolerance Boom Placement - (Sheet 2 of 2)

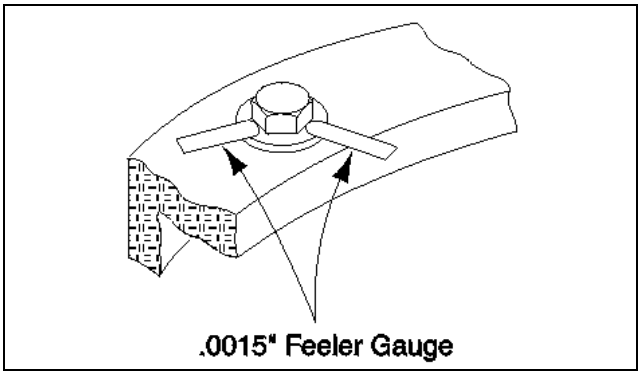

Figure 3-39. Swing Bolt Feeler Gauge Check.

Wear Tolerance

1. From the underside of the machine, at rear center, with the main boom fully elevated and fully retracted, and tower boom stowed, as shown in Figure 3-37., Swing Bearing Tolerance Boom Placement - (Sheet 1 of 2), using a magnetic base dial indicator, measure and record the distance between the swing bearing and turntable. See Figure 3-40., Swing Bearing Tolerance Measuring Point.
2. At the same point, with the main boom at horizontal and fully extended, and the tower boom fully elevated and fully retracted as shown in Figure 3-38., Swing Bearing Tolerance Boom Placement - (Sheet 2 of 2). Using a magnetic base dial indicator, measure and record the distance between the swing bearing and turntable. See Figure 3-40., Swing Bearing Tolerance Measuring Point.
3. If a difference greater than 0.079 in. (2.00 mm) is determined, the swing bearing should be replaced.
4. If a difference less than 0.079 in. (2.00 mm) is determined, and any of the following conditions exist, the bearing should be removed, disassembled, and inspected for the following:
   a. Metal particles in the grease.
   b. Increased drive power required.
   c. Noise.
   d. Rough rotation.
5. If bearing inspection shows no defects, reassemble and return to service.

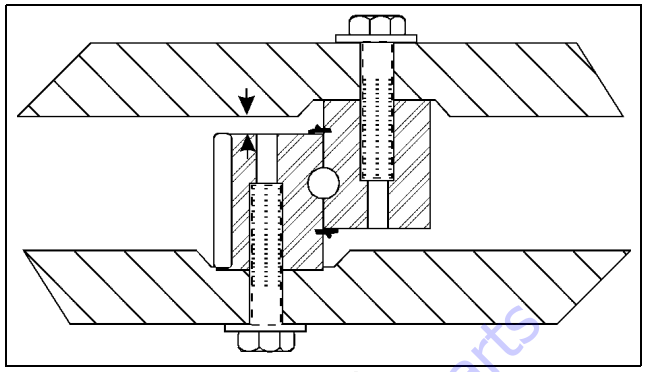

Figure 3-40. Swing Bearing Tolerance Measuring Point.

Swing Bearing Replacement

REMOVAL

1. From Ground Control station, operate the boom adequately to provide access to frame opening to rotary coupling.

⚠ WARNING

NEVER WORK BENEATH THE BOOM WITHOUT FIRST ENGAGING BOOM SAFETY PROP OR PROVIDING ADEQUATE OVERHEAD SLING SUPPORT AND/OR BLOCKING.

2. Attach an adequate support sling to the boom and draw all slack from sling. Prop or block the boom if feasible.
3. From inside turntable, remove mounting hardware which attach rotary coupling retaining yoke brackets to turntable.

NOTICE

HYDRAULIC LINES AND PORTS SHOULD BE CAPPED IMMEDIATELY AFTER DISCONNECTING LINES TO AVOID THE ENTRY OF CONTAMINANTS INTO THE SYSTEM.

4. Tag and disconnect the hydraulic lines from the fittings on the top of the rotary coupling. Use a suitable container to retain any residual hydraulic fluid. Immediately cap lines and ports.
5. Attach suitable overhead lifting equipment to the base of the turntable weldment.
6. Use a suitable tool to scribe a line on the inner race of the swing bearing and on the underside of the turntable. This will aid in aligning the bearing upon installation. Remove the bolts and washers which attach the turntable to the bearing inner race. Discard the bolts.
7. Use the lifting equipment to carefully lift the complete turntable assembly from the bearing. Ensure that no damage occurs to the turntable, bearing or frame-mounted components.

Go to Discount Equipment.com to order your parts

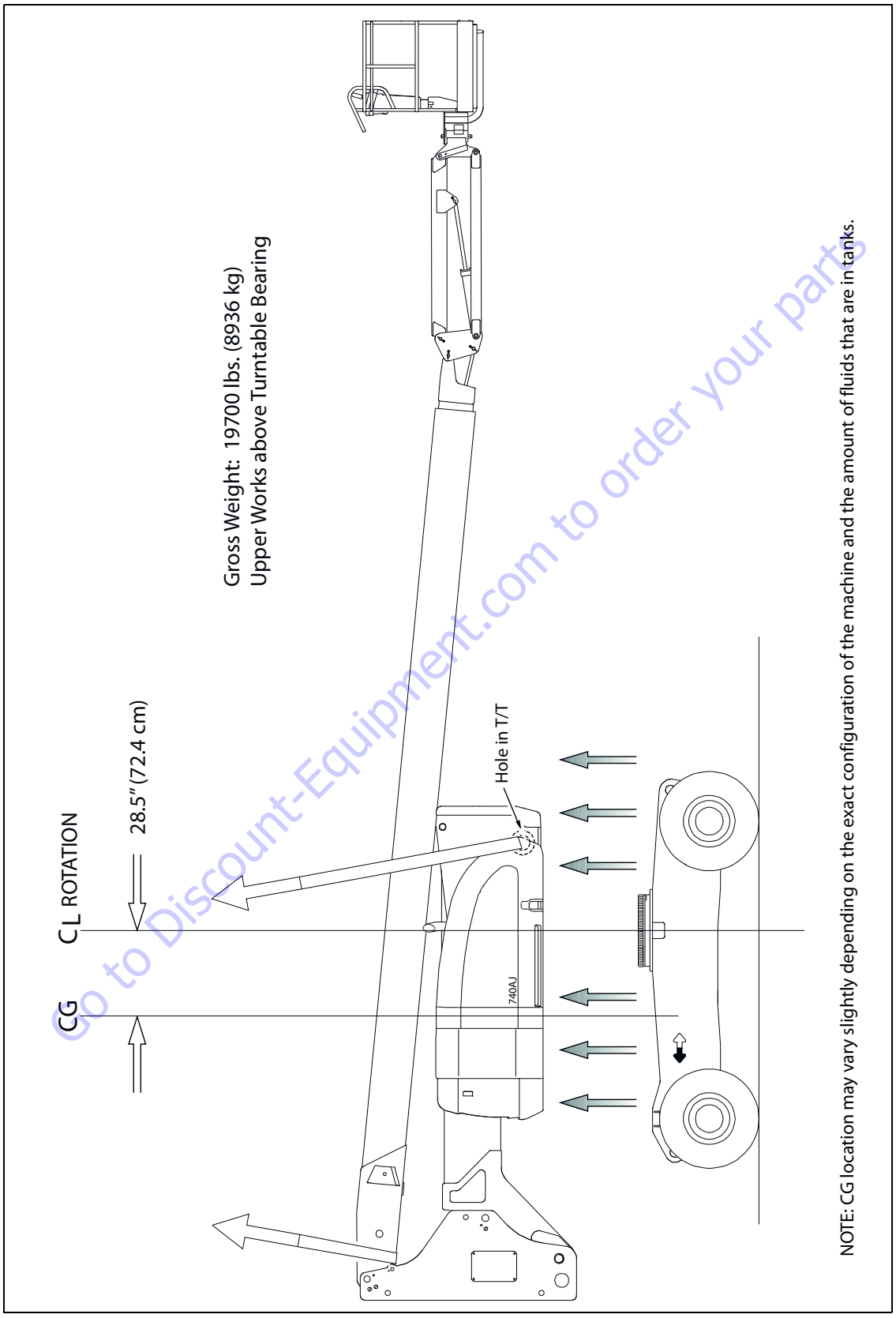

Figure 3-41. Swing Bearing Removal

Go to Discount-Equipment.com to order your parts

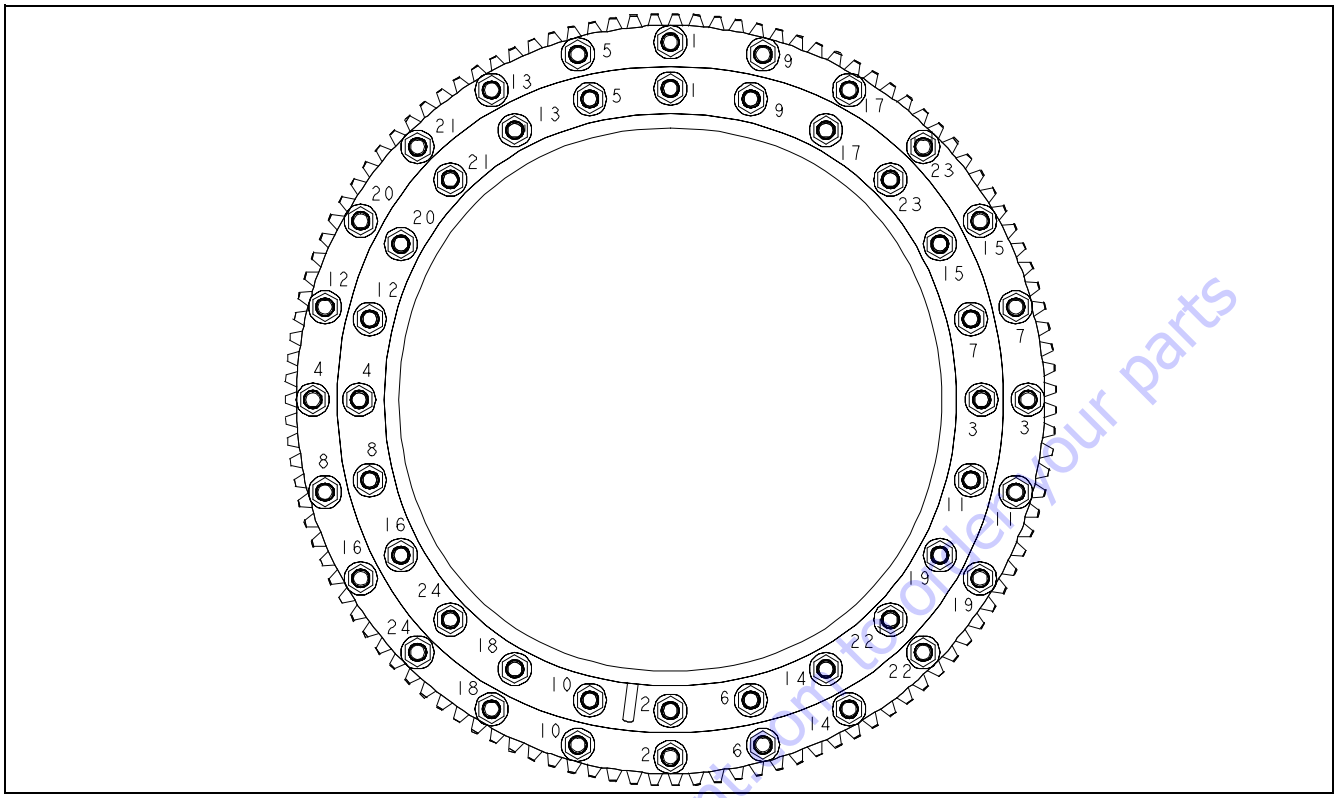

Figure 3-42. Swing Bearing Torque Sequence.

8. Carefully place the turntable on a suitably supported trestle.

9. Use a suitable tool to scribe a line on the outer race of the swing bearing and the frame. This line will aid in aligning the bearing upon installation. Remove the bolts and washers which attach the outer race of the bearing to the frame. Discard the bolts. Use suitable lifting equipment to remove the bearing from the frame, then move the bearing to a clean, suitably supported work area.

INSTALLATION

1. Using suitable lifting equipment, carefully lower the swing bearing into position on the frame. Ensure the scribed line of the outer race of the bearing aligns with the scribed line on the frame. If a new swing bearing is used, ensure that the filler plug fitting is at 90 degrees from the fore and aft center line of the frame.

⚠ CAUTION

JLG INDUSTRIES RECOMMENDS THAT ALL REMOVED BEARING BOLTS BE DISCARDED AND REPLACED WITH NEW BOLTS. SINCE THE SWING BEARING IS THE ONLY STRUCTURAL LINK BETWEEN THE FRAME AND TURNTABLE, IT IS IMPERATIVE THAT SUCH REPLACEMENT HARDWARE MEETS JLG SPECIFICATIONS. USE OF GENUINE JLG HARDWARE IS HIGHLY RECOMMENDED.

2. Apply a light coating of JLG Threadlocker P/N 0100019 to the new bearing bolts, and loosely install the bolts and washers through the frame and outer race of bearing.

NOTICE

IF COMPRESSED AIR OR ELECTRICALLY OPERATED IMPACT WRENCH IS USED FOR TIGHTENING THE BEARING ATTACHMENT BOLTS, THE TORQUE SETTING ACCURACY OF THE TOOL SHOULD BE CHECKED PRIOR TO USE.

Go to Discount Equipment.com to order your parts

3. Refer to the Torque Sequence diagram as shown in Figure 3-42., Swing Bearing Torque Sequence. Spray a light coat of Safety Solvent 13 on the new bearing bolts. Then apply a light coating of Loctite #271 to the new bearing bolts, and install the bolts and washers through the frame and outer race of the bearing. Tighten the bolts to an initial torque of 190 ft. lbs. (260 Nm) w/Loctite.
4. Remove the lifting equipment from the bearing.
5. Using suitable lifting equipment, carefully position the turntable assembly above the machine frame.
6. Carefully lower the turntable onto the swing bearing, ensuring that the scribed line of the inner race of the bearing aligns with scribed line on the turntable. If a new swing bearing is used, ensure that the filler plug fitting is at 90 degrees from the fore and aft center line of the turntable.
7. Spray a light coat of Safety Solvent 13 on the new bearing bolts. Then apply a light coating of Loctite #271 to the new bearing bolts, and install the bolts and washers through the turntable and inner race of the bearing.
8. Following the Torque Sequence diagram shown in Figure 3-42., Swing Bearing Torque Sequence., tighten the bolts to a torque of 190 ft. lbs. (260 Nm) w/Loctite.
9. Remove the lifting equipment.
10. Install the rotary coupling retaining yoke brackets, apply a light coating of Loctite #242 to the attaching bolts and secure the yoke to the turntable with the mounting hardware.
11. Connect the hydraulic lines to the rotary coupling as tagged prior to removal.
12. At ground control station, use boom lift control to lower boom to stowed position.
13. Using all applicable safety precautions, activate the hydraulic system and check the swing system for proper and safe operation.

Swing Bearing Torque Values

1. Outer Race - 190 ft. lbs. (260 Nm) w/Loctite.
2. Inner Race - 190 ft. lbs. (260 Nm) w/Loctite.
3. See Swing Bearing Torquing Sequence.

⚠ WARNING

CHECK THE INNER AND OUTER SWING BEARING BOLTS FOR MISSING OR LOOSENESS AFTER FIRST 50 HOURS OF OPERATION, AND EVERY 600 HOURS THEREAFTER.

Go to Discount-Equipment.com to order your parts

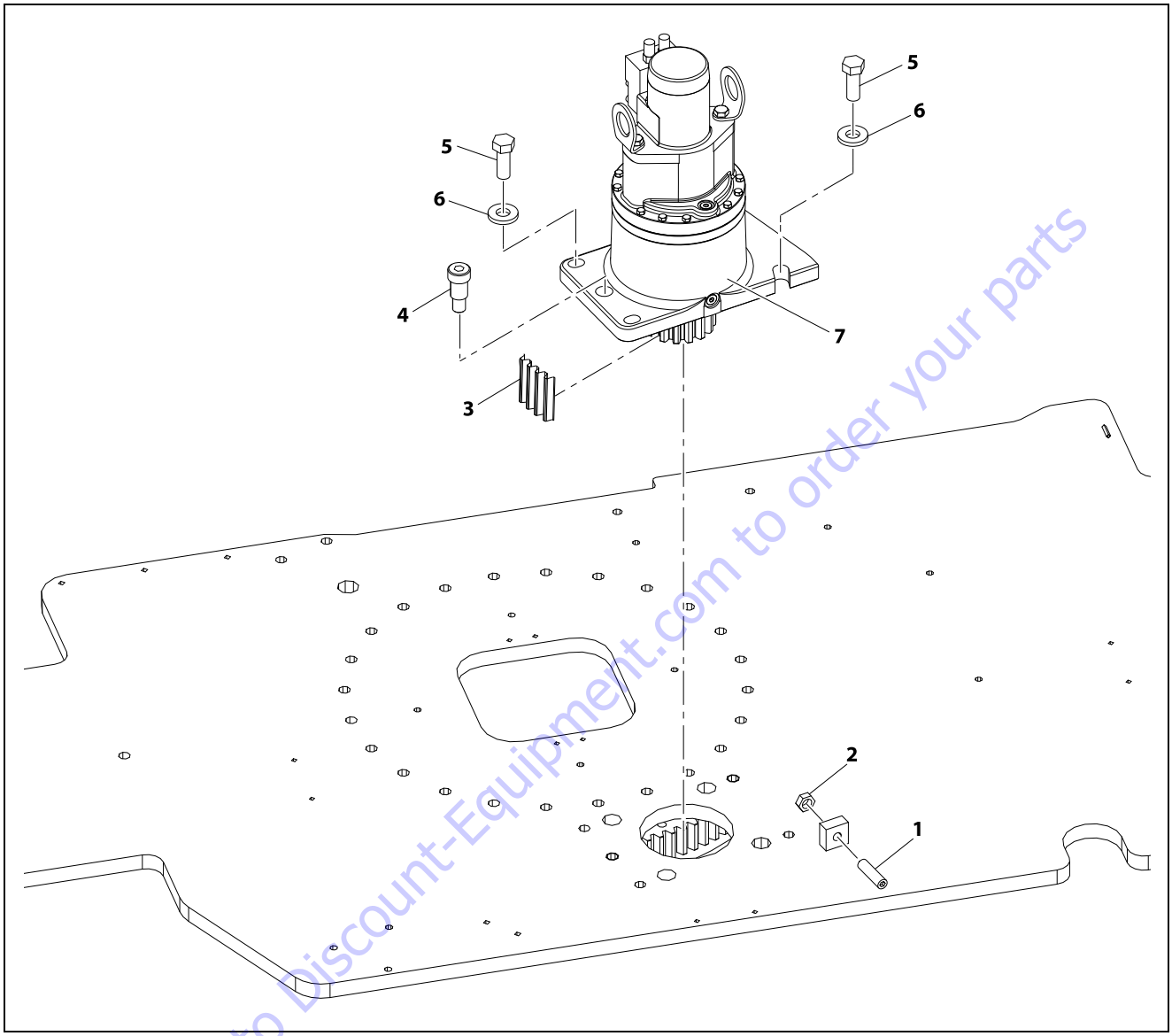

1. Bolt
2. Jam Nut
3. Shim
4. Shoulder Screw
5. Capscrew
6. Washer
7. Swing Motor and Drive Assembly

Figure 3-43. Swing Drive Installation

Go to Discount-Equipment.com to order your parts

3.11 SWING HUB REMOVAL

4. Disconnect all wiring harness terminals connected to the swing motor.
5. Gently loosen the set screw. Do not remove.
6. Remove the pivot bolt using allen wrench.

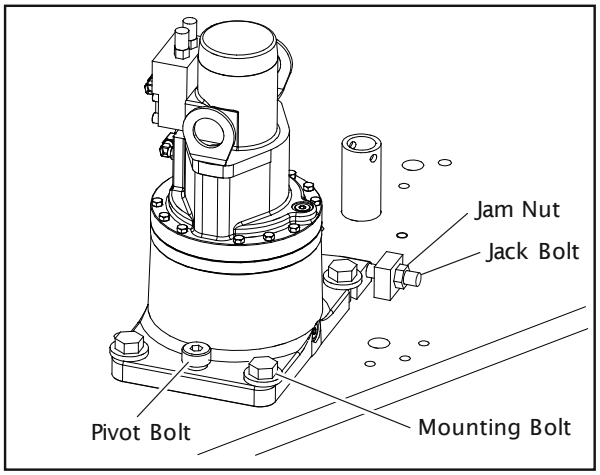

7. Remove the mounting bolts securing swing drive hub to the turntable.
8. Using the suitable lifting device, remove the swing drive hub from mounting plate without damaging the swing gear.
9. Place swing drive hub in the clean area.

3.12 SWING HUB INSTALLATION

Ensure mounting plate and mounting location of the base plate are clean and painted with a uniform coating of minimum thickness (no runs, drips, etc.).

Procedure For Setting Swing Gear Backlash

Set backlash to 0.008 in. to 0.012 in. (0.2 mm - 0.3 mm) using the following procedure:

1. Place the machine on firm, level ground.
2. Place shim between pinion and bearing at bearing high spot (shown below).

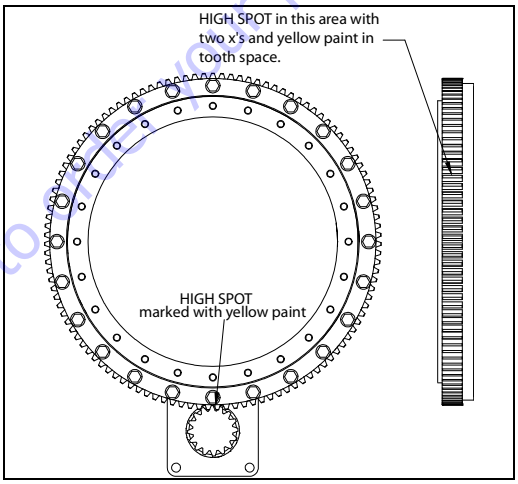

3. Apply JLG Threadlocker P/N 0100019 and torque shoulder screw to 420 ft. lbs. (569 Nm).

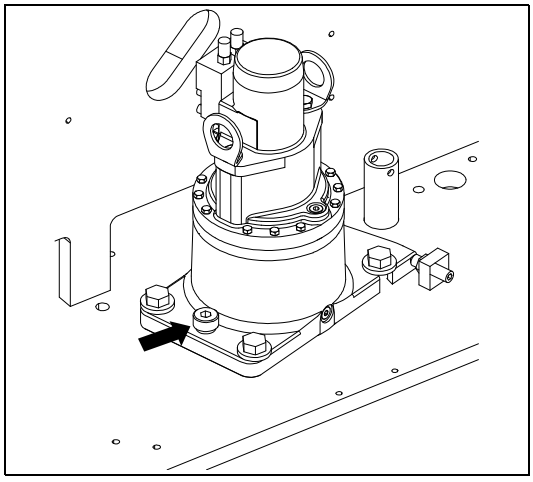

Go to Discount-Equipment.com to order parts

NOTE: *Make sure the turntable is properly supported during the following step. The turntable can swing a few degrees when the turntable lock is removed if the turntable is not balanced properly. Remove turntable lock pin.*

4. Apply JLG Threadlocker P/N 0100019 and pre-torque bolt.

NOTE: *Pre-torque to 120 ft. lbs. (163 Nm) for (Prior to SN 0300134352).*
Pre-torque to 30 ft. lbs. (42 Nm) for (SN 0300134353 through 0300185827).

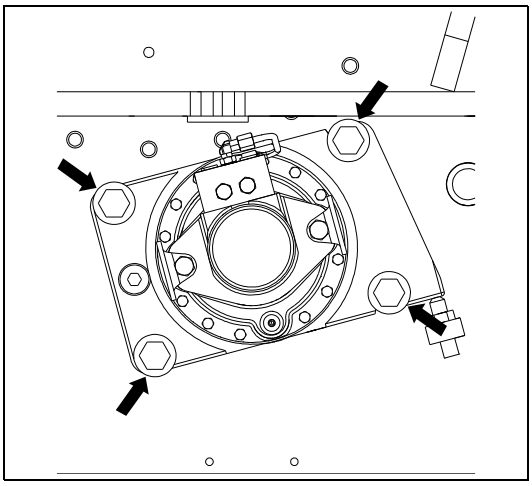

5. Tighten setscrew until pinion is completely snug against shim and bearing then back off setscrew.

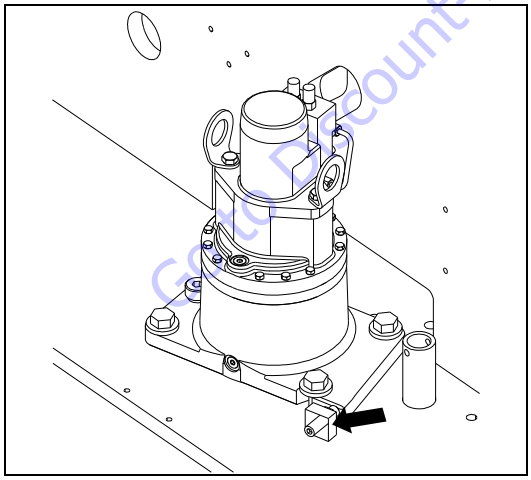

6. Apply JLG Threadlocker P/N 0100019 and torque set-screw 50 ft. lbs. (67.5 Nm) (w/JLG Threadlocker P/N 0100019).

7. Apply JLG Threadlocker P/N 0100019 and tighten jam nut.

8. Torque the bolt to 420 ft. lbs. (569 Nm).

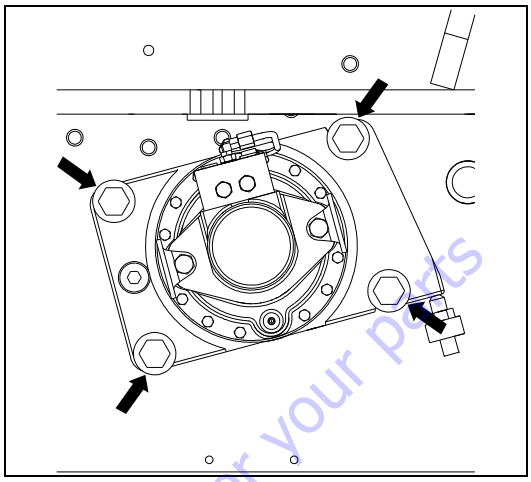

9. Remove shim and discard.

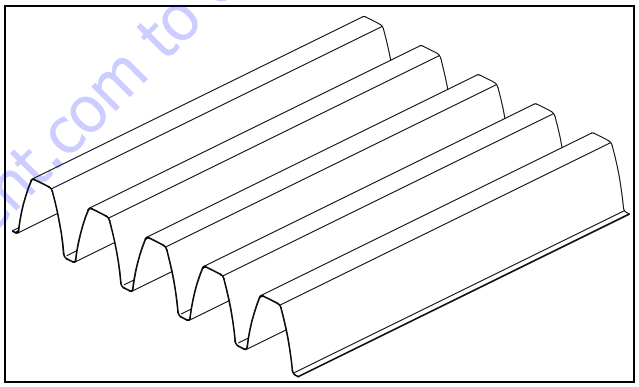

Swing Drive Lubrication

Fill Swing Drive Gearbox with 43 oz (1.27 L) 90w80gear oil with EP additives. Oil should cover the ring gear.

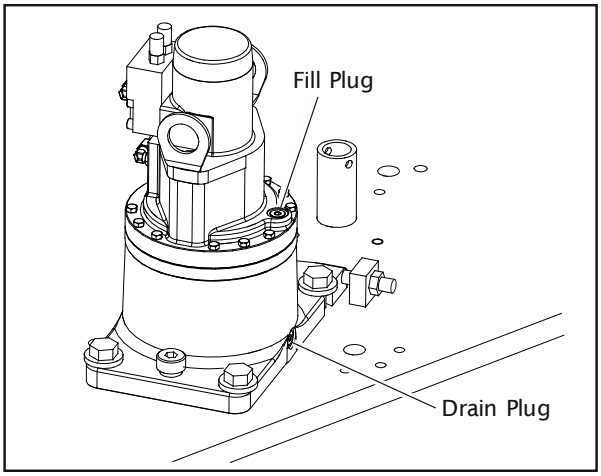

Genie Discount-Equipment.com to order your parts

3.13 SWING HUB (PRIOR TO SN 0300074383)

Disassembly

1. Loosen all 12 Cover Bolts (12) & (13) and drain the oil from the unit.
2. Remove the 12 Cover Bolts (12) & (13) and lift off the Cover (6). Remove and discard the o-ring (5) from the counterbore of the Cover (6).
3. Remove the Input Gear (8) and Thrust Washer (10).
4. Lift out the Carrier Assembly (3) and top Thrust Washer (11). This Thrust Washer (11) may stick to the inside of the Cover (6).
5. Remove the Input Thrust Spacer (9).
6. Lift out the Internal Gear (2) and Thrust Washer (11). The Thrust Washer (11) may stick to the under side of the Carrier (3).
7. Remove the Retaining Ring (1I) from the Output Shaft (1A) and discard.

⚠ CAUTION

EYE PROTECTION SHOULD BE WORN DURING RETAINING RING (1L) REMOVAL.

8. Remove Bearing Shim (1H) from the Output Shaft (1A).
9. The Output Shaft (1A) may now be pressed out of the Hub (1G).
10. The Bearing Cups (1C) &(1E) will remain in Hub (1G) as will Bearing Cone (1F). Bearing Cone (1D) will remain on the Output Shaft (1A). The Seal (1B) will be automatically removed during this procedure.

NOTE: *If bearing replacement is necessary, the Bearing Cups can be removed with a slide hammer puller or driven out with a punch.*

11. To remove the Cluster Gears (3F) from the Carrier (3A), drive the Anti-roll Pin (3G) into the Planet Shaft (3E). The Planet Shaft (3E) may now be tapped out of the Carrier. After Planet Shaft (3E) has been removed the Roll Pin (3G) can be driven out.
12. The Cluster Gear (3F) can now be removed from the Carrier (3A). The Thrust Washers (3B) will be removed with the Cluster Gear (3F).
13. The Needle Rollers (3C) and Spacer (3D) are now removed from the Cluster Gear (3F).

⚠ WARNING

WHEN REBUILDING OR REPAIRING THE UNIT, THE RETAINING RING (1I), O-RINGS (5) AND SEAL (1B) SHOULD ALWAYS BE REPLACED.

Assembly

1. With the Hub Shaft Sub-assembly resting on the Shaft (1A) install Internal Gear (2). The Spline of the Internal Gear (2) bore will mesh with the Spline of the Output Shaft (1A).

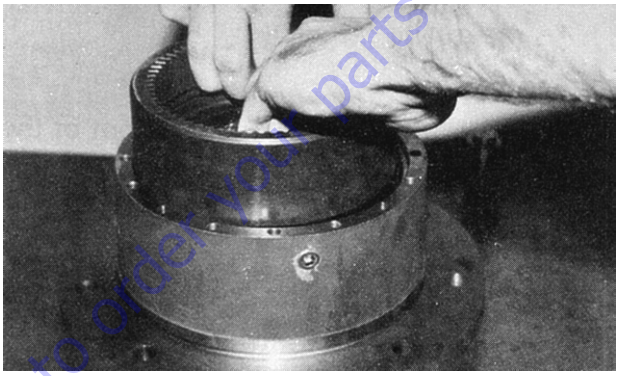

2. Thrust Washer (11) is installed on the face of the Output Shaft (1A). Sufficient Grease or Petroleum Jelly should be used to hold Thrust Washer (11) in place.

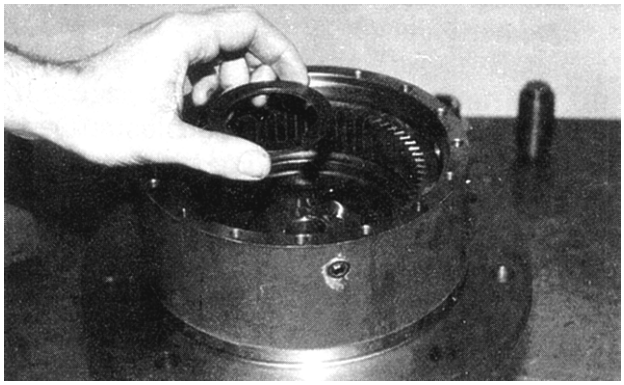

Go To Discount-Equipment.com to order your parts

3. Place O-ring (5) into Hub counterbore. Use petroleum jelly to hold o-ring in place.

⚠ CAUTION

BEWARE OF SHARP EDGES OF THE COUNTERBORE WHILE SEATING THIS O-RING.

Also at this time locate and mark the 4 counter beamed holes in the face of the Hub (1G). This is for identification later in the assembly.

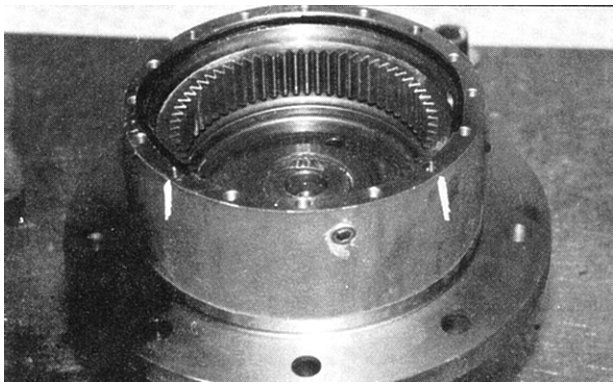

4. Thrust Spacer (9) is installed into the bore of the Output Shaft (1A). This should be a slip fit and the Thrust Spaces should rotate in this location.

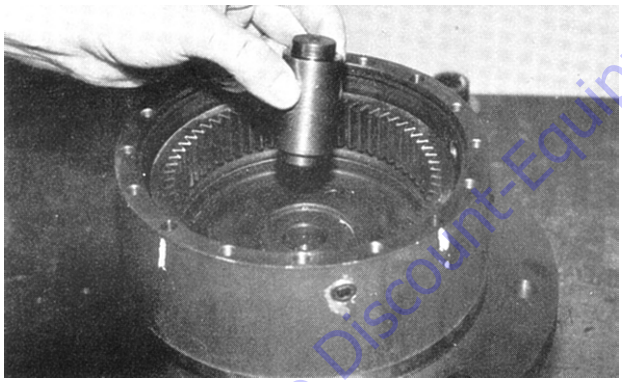

5. Place Carrier Assembly (3) on a flat surface with the large gears (3F) up and positioned as shown. Find the punch marked tooth on each large gear (3F) and locate at 12 o'clock (straight-up) from each planet pin. Marked tooth will be located just under the Carrier (3A) on upper two gears (3F).

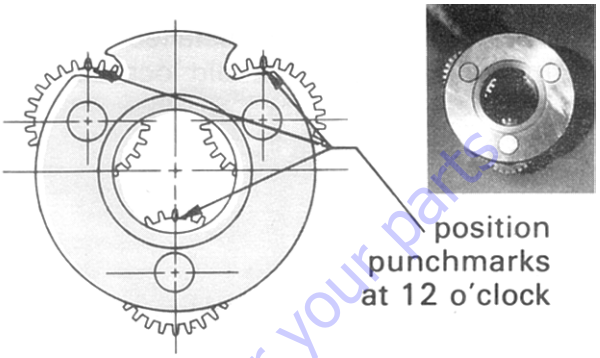

6. With shoulder side of Ring Gear (4) facing down, place Ring Gear over (into mesh with) large gears. Be sure that punch marks remain in correct location during Ring Gear installation. The side of the Ring Gear with an X stamped on it should be up.

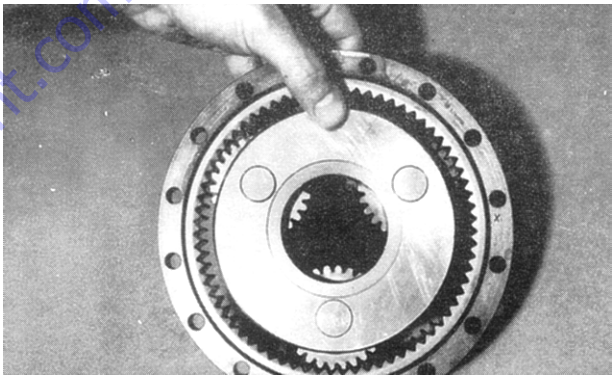

Go to Discount-Equipment.com to order your parts

7. While holding Ring Gear (4) and Cluster Gears (3F) in mesh, place small side of Cluster Gears (3F) into mesh with the Internal Gear (2) and Input Gear (13). On the Ring Gear locate the hole marked X over one of the marked counterbored holes (Step 3) in Hub (1G).

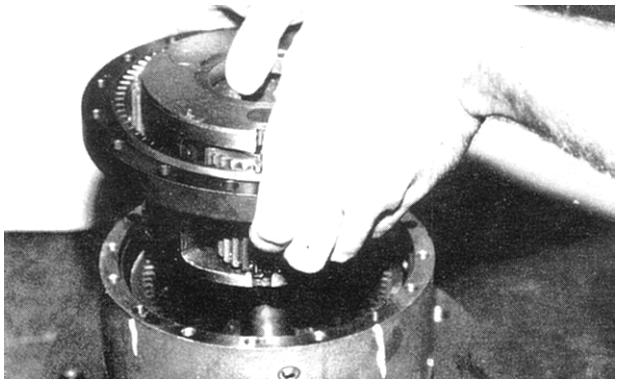

NOTE: *If gears do not mesh easily or Carrier Assembly does not rotate freely, then remove the Carrier and Ring Gear and check the Cluster Gear timing.*

8. Input Gear (8) is installed, meshing with the teeth of the large diameter Cluster Gear (3F). The counterbore on the Input Gear (8) locates on the shoulder of the Thrust Spacer (9). This is to be a slip fit and operate freely.

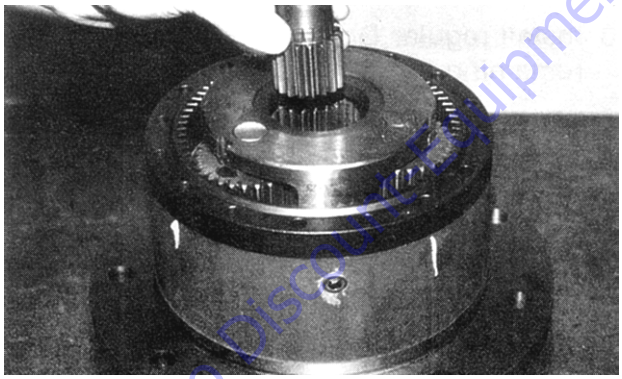

9. Thrust Washer (10) is installed onto the Input Gear (8) and should locate on the gear teeth shoulder.

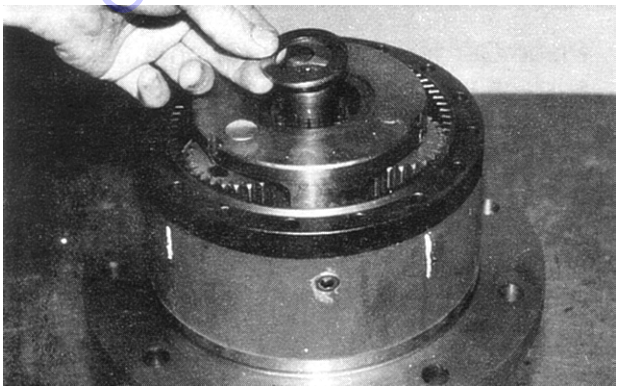

10. Thrust Washer (11) is installed into the counterbore of the Carrier (3).

11. Place O-ring (5) into Cover (6) counterbore. Use petroleum jelly to hold O-ring in place.

⚠ WARNING

BEWARE OF SHARP EDGES OF THE COUNTERBORE WHILE SEATING THIS O-RING.

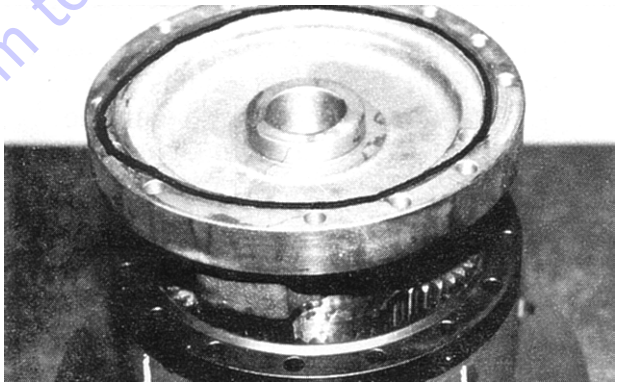

12. The Cover (6) is now installed on this assembly. Taking care to correctly align Pipe Plug hole (20) with those in the Hub (1J), usually 90° to one another.

Locate the 4 counterbore holes in Hub (1G) (marked in Step 3) and install 4 Shoulder Bolts (13). A slight tap with a hammer may be necessary to align Shoulder Bolt with Hub (1G) counterbore.

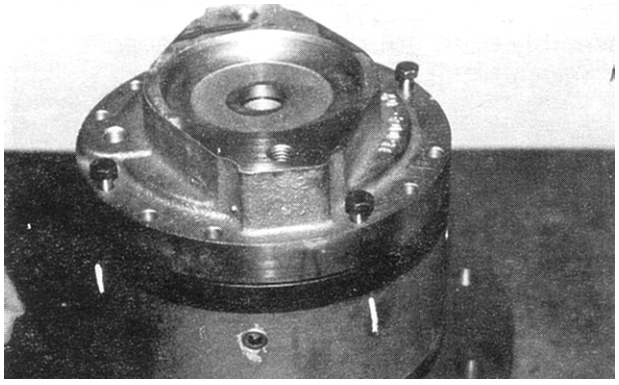

Go to Discount Equipment.com to order your parts

13. Install regular Grade 8 Bolts (12) into remaining holes.

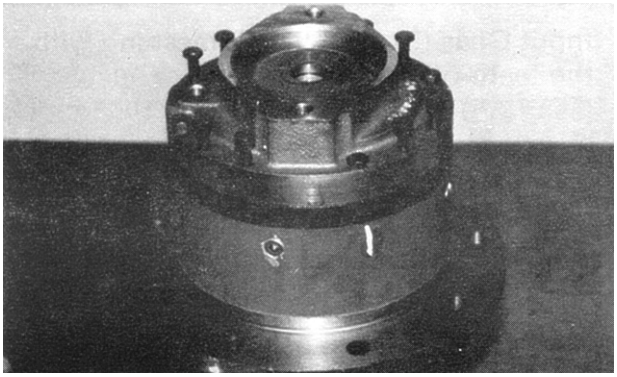

14. Pipe Plugs (20) are to be installed into Cover (6) using a lubricant seal of some sort.

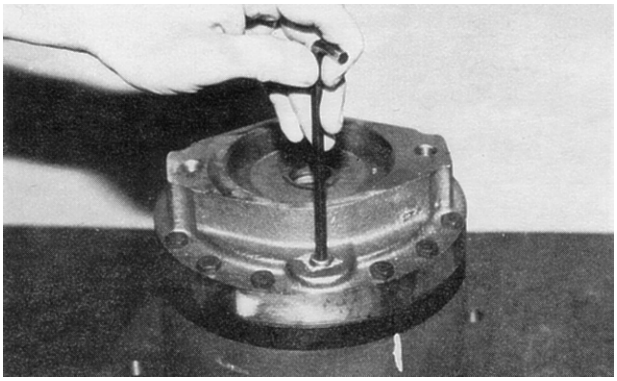

15. Torque Shoulder Bolts (13) to 23-27 ft. lbs. and regular Grade 8 Bolts (12) to 23-27 ft. lbs.

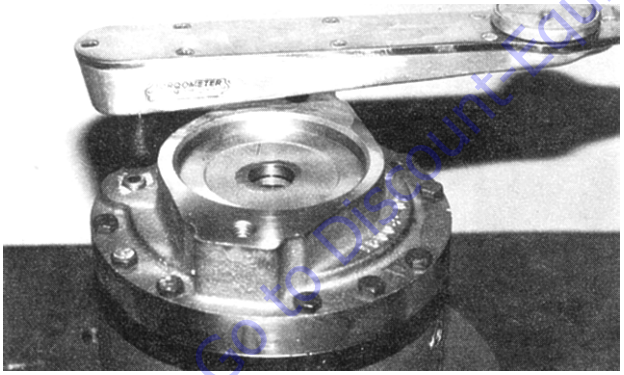

16. The unit must be completely filled with EP 90 lubricant before operation.

Hub Shaft Sub-Assembly

1. Press Bearing Cone (1D) onto Shaft (1A).

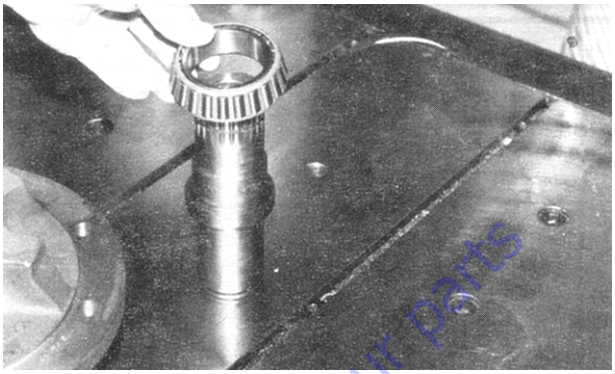

2. Press Bearing Cup (1C) into Hub (1G) taking care to insure cup start square with the bore of Hub (1G).

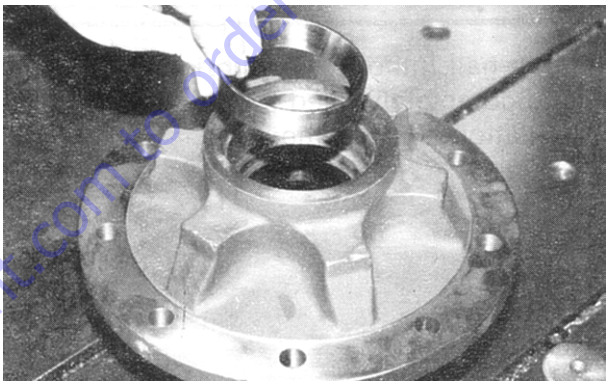

3. Invert Hub (1G) and press Bearing Cup (1E) into inter-counterbore of Hub (1G).

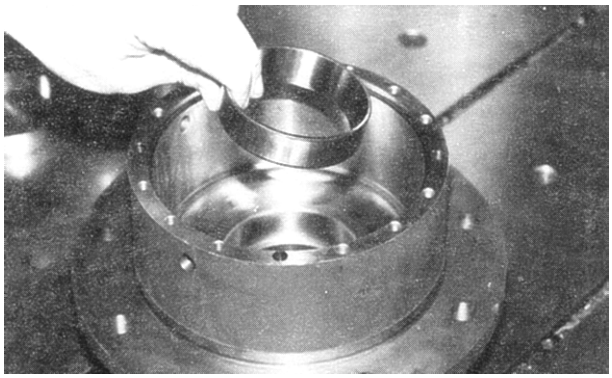

Go to Discount-Equipment.com to order your parts

4. Returning the Hub (1G) to locate on the large diameter end, the Output Shaft (1A) is carefully installed into the Hub (1G).

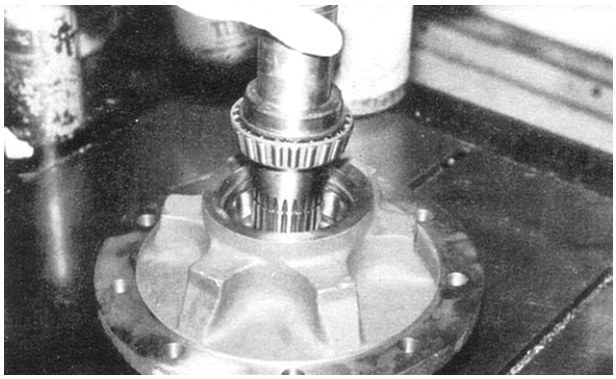

5. The Shaft Seal (1B) is installed over the Output Shaft (1A) and into the counterbore of the Hub (1G). Care should be taken to insure the Seal (1B) is being correctly installed (smooth face UP and located just flush with the counterbore face).

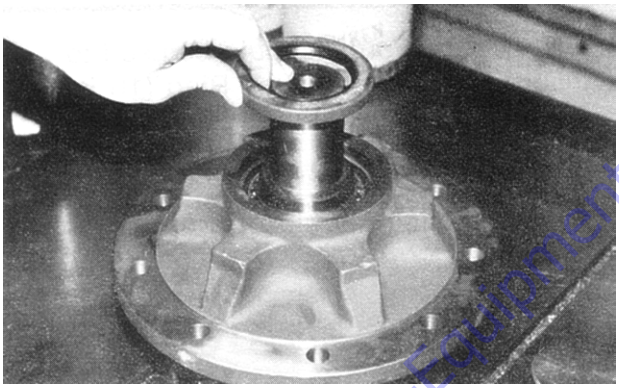

6. The Bearing Cone (1F) is an interference fit and has to be pressed or tapped on.

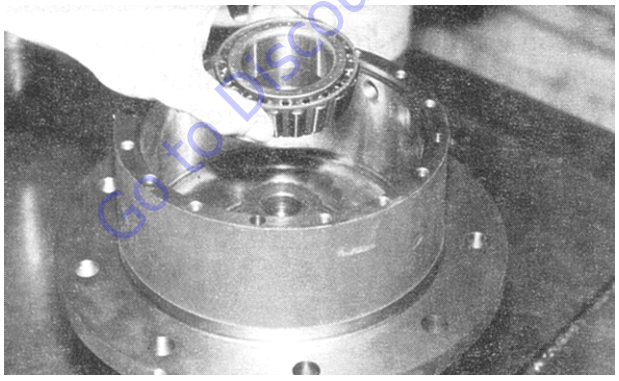

7. Pipe Plugs (1J & 1K) should be checked and/or installed at this time in the assembly.

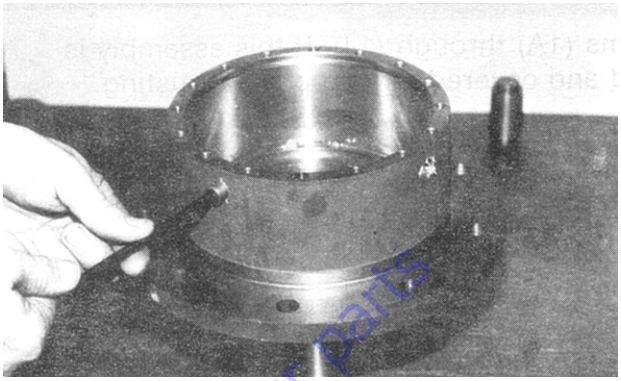

8. Bearing Spacer (1H) is installed around the Output Shaft (1A) and locates on Bearing Cone (1F).

9. Retaining ring (11) installed into the groove provided in the Output Shaft (1A). This Retaining Ring (1I) should never be reused in a repair or rebuild.

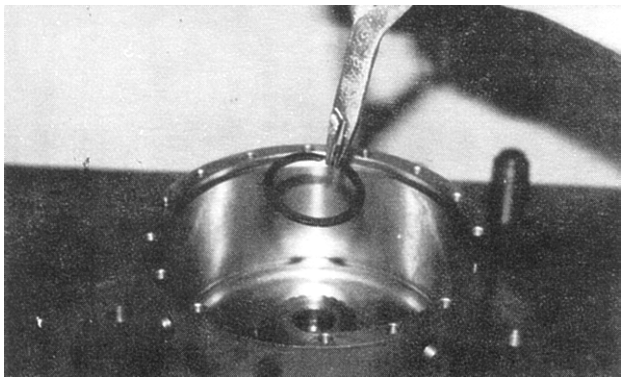

⚠ WARNING

EYE PROTECTION SHOULD BE WORN DURING THIS PROCEDURE.

Go to Discount-Equipment.com to order your parts

10. A soft metal punch should be used to insure that this Retaining Ring (11) is completely seated in the groove of the Output Shaft (1A).

⚠ WARNING

EYE PROTECTION SHOULD BE WORN DURING THIS PROCEDURE.

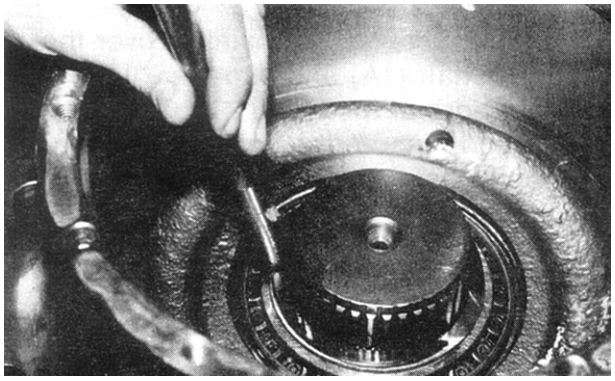

11. Upon completion of Step 10, rap the internal end of the Output Shaft (1A) twice with a piece of soft metal rod. This will release the preload which was on the Bearings.

12. If the assembly is not going to be used right away, it should be oiled and covered to help prevent rusting.

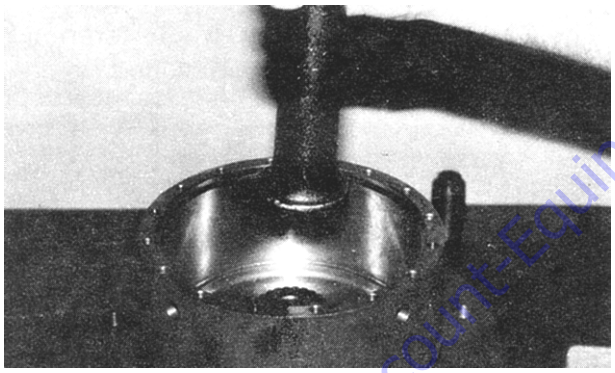

Carrier Sub-Assembly

1. Apply a coat of grease or petroleum jelly to Cluster Gear bore.

2. Place sixteen Needle Rollers into Cluster Gear bore.

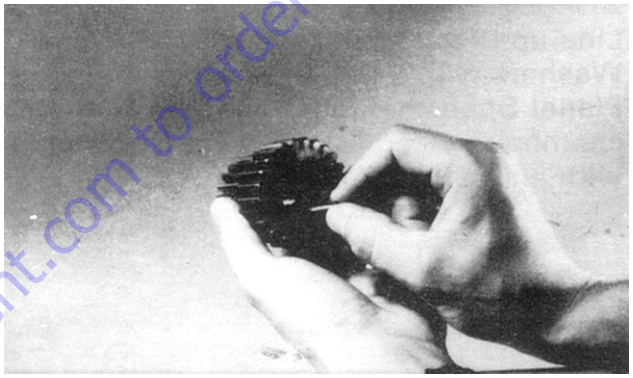

3. Place Spacer washer into opposite side of Cluster Gear and against Needle Rollers.

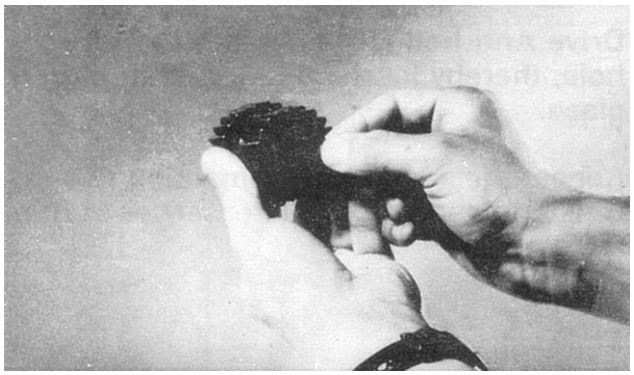

Go to Discount-Equipment.com to order your parts

4. Place second set of sixteen Needle Rollers into Cluster Gear.

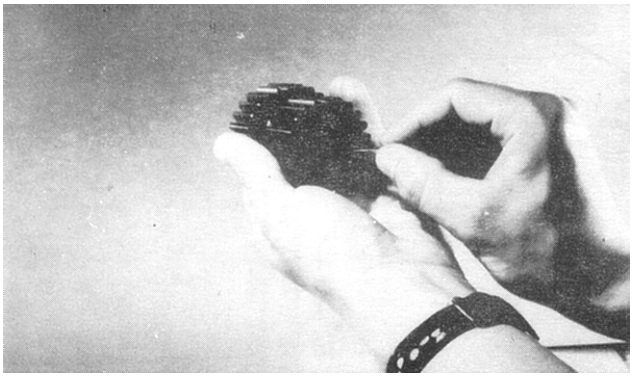

5. Apply grease or petroleum jelly to the tang side of two Thrust Washers. Place Thrust Washers against bosses in Carrier with washer tang fitting into slot in Carrier outside diameter.

NOTE: *Some old style Carriers will not have slots and tangs should be located inside boss relief.*

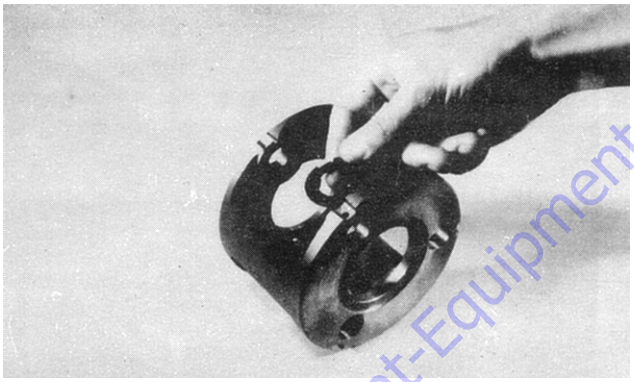

6. While keeping Thrust Washers in place, slide Cluster Gear into Carrier with the larger gear on the side with the small pin hole.

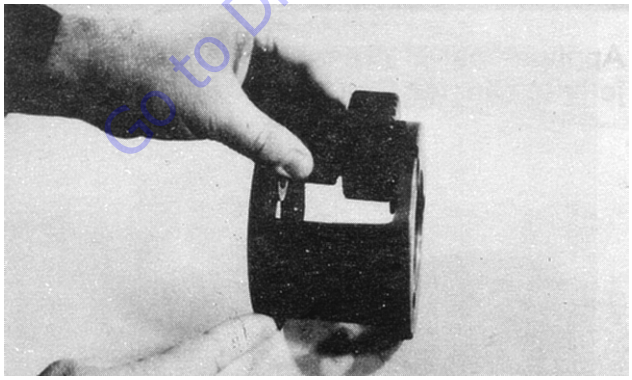

7. Line up Cluster Gear and thrust Washers with hole in Carrier and slide Planet Shaft through. Line up chamfered side of hole in Planet Shaft with pin hole in Carrier.

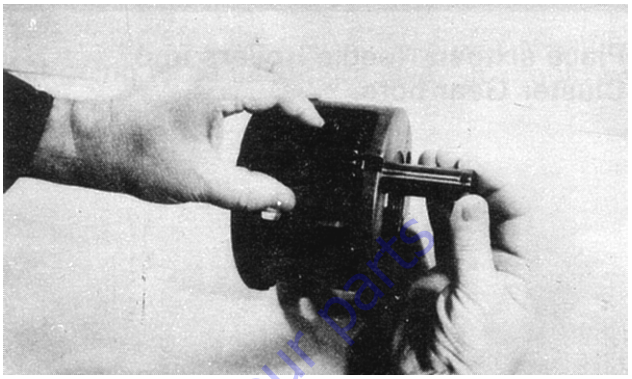

8. Drive Anti-Roll Pin flush into Carrier hole, thereby locking Planet Shaft into place.

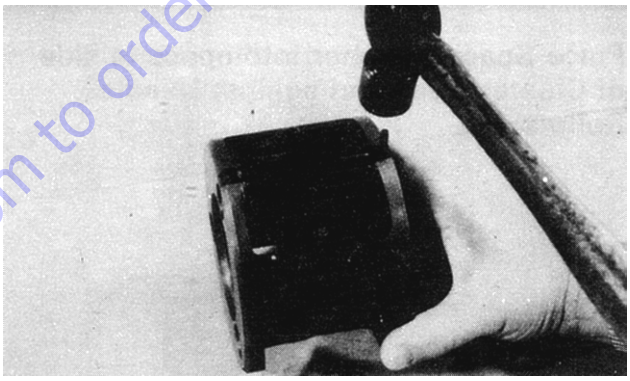

9. Repeat these steps for remaining two Cluster Gears to complete Carrier Sub Assembly.

Go to Discount-Equipment.com to order your parts

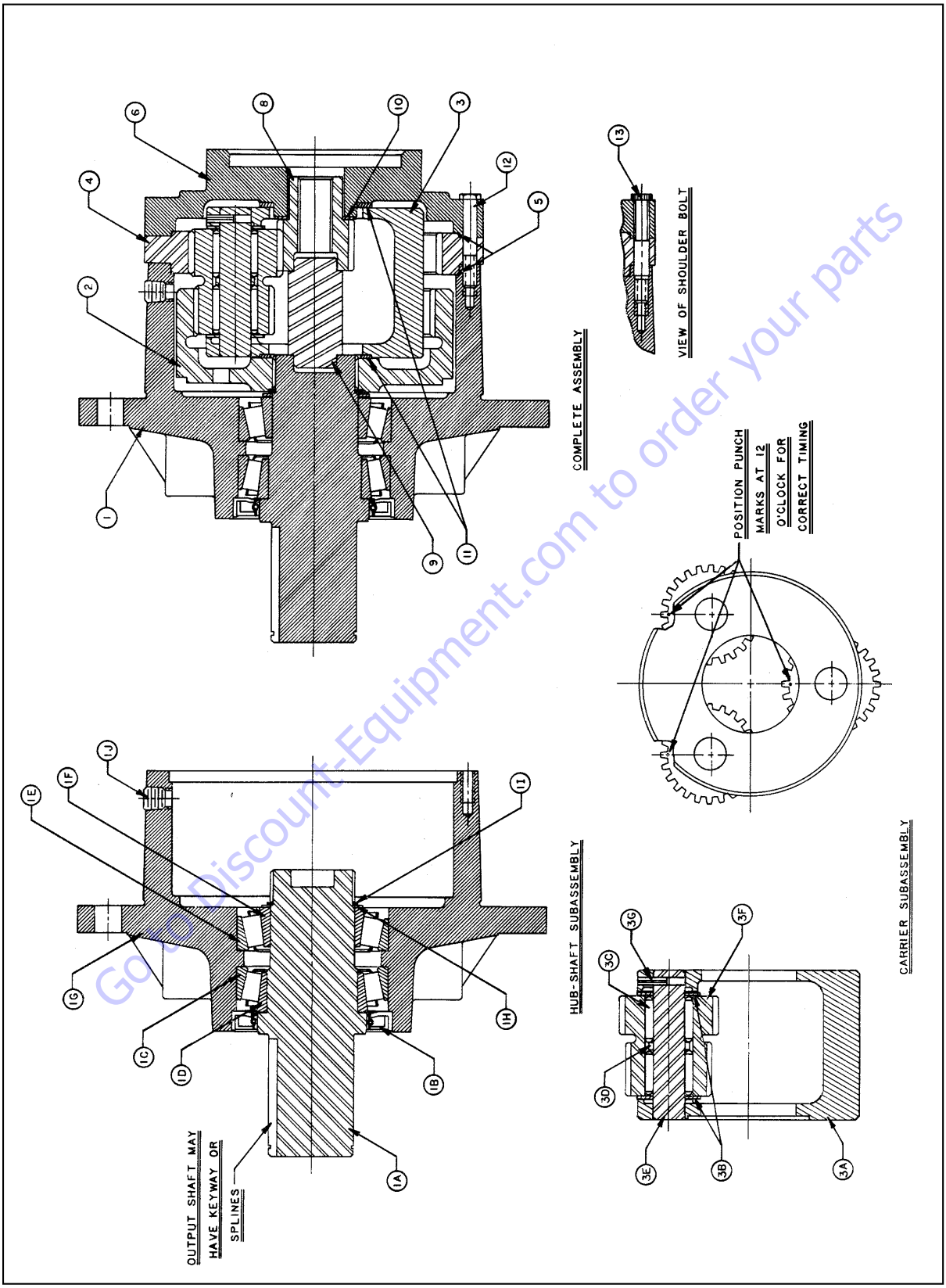

Figure 3-44. Swing Hub (Prior to SN 0300074383)

Good Discount-Equipment.com to order your parts

3.14 SWING HUB (SN 0300074383 THROUGH 0300134352)

Disassembly

1. Loosen all 12 cover bolts (12)&(13) and drain the oil from the unit.
2. Remove the 12 cover bolts (12)& (13) and lift off the cover (6). Remove and discard the O-ring (5) from the counterbore of the cover (6).
3. Remove the input gear (8) and thrust washer (10).
4. Lift out the carrier assembly (3) and top thrust washer (11). The thrust washer (11) may stick to the inside of the carrier (3).
5. Remove the input thrust spacer (9).
6. Lift out the internal gear (2) and thrust washer (11). The thrust washer (11) may stick to the under side of the carrier (3).
7. Remove the retaining ring (1I) from the output shaft (1A) and discard.

⚠ CAUTION

EYE PROTECTION SHOULD BE WORN DURING RETAINING RING (1I) REMOVAL.

8. Remove bearing shim (1H) from the output shaft (1A).
9. The output shaft (1A) may now be pressed out of the hub (1G).
10. THe bearing cups (1C)&(1E) will remain in hub (1G) as will bearing cone (1F). Bearing cone (1D) will remain on the same output shaft (1A). The seal (1B) will be automatically removed during this procedure.

NOTE: *If bearing replacement is necessary, the bearing cups can be removed with a slide hammer puller driven out with a punch.*

11. To remove the cluster gears (3F) from the carrier (3A), drive the anti-roll pin (3G) into the planet shaft (3E) may now be tapped out of the carrier. After planet shaft (3E) has been removed the roll pin (3G) can be driven out.
12. The cluster gear (3F) can now be removed from the carrier (3A). THe thrust washers (3B) will be removed with the cluster gear (3F).
13. The needle rollers (3C) and spacer (3D) are now removed from the cluster gear (3F).

⚠ WARNING

WHEN REBUILDING OR REPAIRING THE UNIT, THE RETAINING RING (1I), O-RINGS (5) AND SEAL (1B) SHOULD ALWAYS BE REPLACED.

Main Assembly Procedure

1. With the hub shaft sub-assembly resting on the shaft (1A) install internal gear (2). The spline of the internal gear (2) bore will mesh the spline of the output shaft (1A).

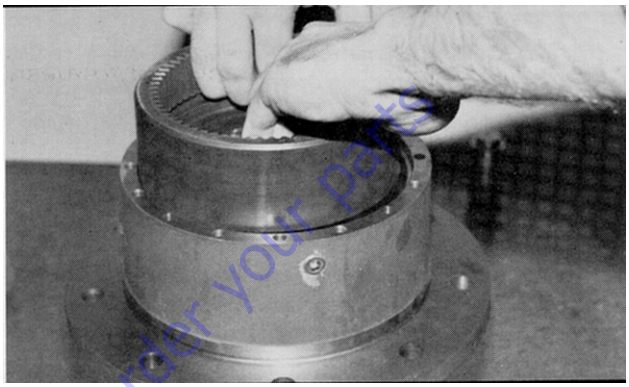

2. Thrust washer (11) is installed on the face of the output shaft (1A). Sufficient grease or petroleum jelly should be used to hold thrust washer in place.

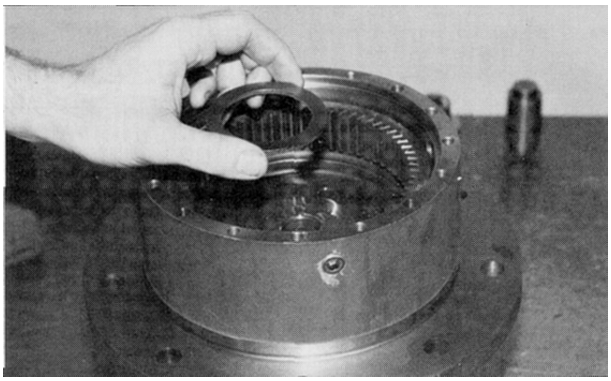

3. Place O-ring (5) into hub counterbore. Use petroleum jelly to hold O-ring in place. Also at this time locate and mark the 4 counter beamed holes in the face of the hub (1G). This is for identification later in the assembly.

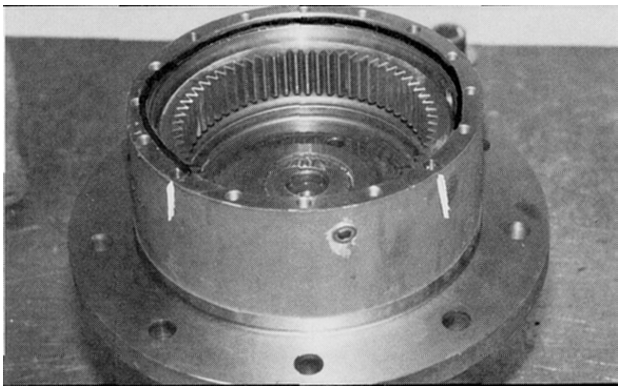

Go to Discount-Equipment.com to order your parts

4. Thrust spacer (9) is installed into the bore of the output shaft (1A). This should be a slip fit and thrust spaces should rotate in this location.

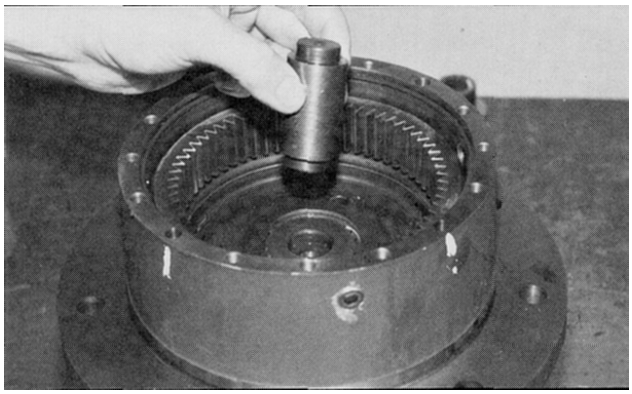

5. Place carrier assembly (3) on a flat surface with the large gears (3F) up and positioned as shown. Find the punch marked tooth on each large gear (3F) and locate at 12 0'clock (straight-up) from each planet pin. Marked tooth will be located just under the carrier (3A) on upper two gears (3F).

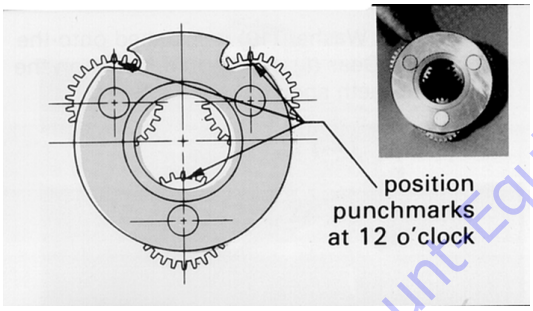

6. With shoulder side of ring gear (4) facing down, place ring gear over (into mesh with) large gears. Be sure that punch marks remain in correct location during ring gear installation. The side of the ring gear with an x stamped on it should be up.

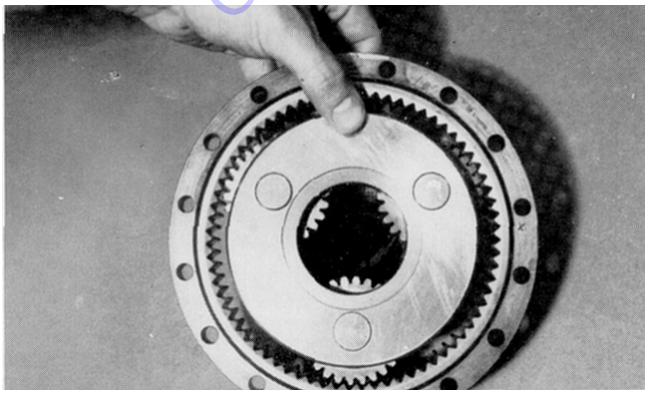

7. While holding ring gear (4) and cluster gears (3F) in mesh, place small side of cluster gears (3F) into mesh with the internal gear (2) and input gear (13). On the ring gear locate the hole marked "x" over one of the marked counterbore holes (step 3) in hub (1G).

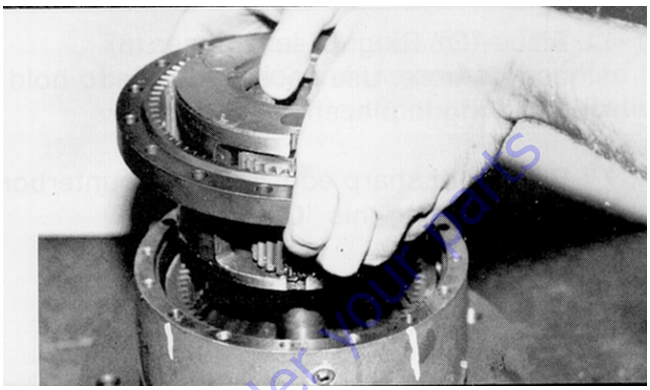

NOTE: *If gears do not mesh easily or carrier assembly does not rotate freely, then remove the carrier and ring gear and check the cluster gear timing.*

8. Input gear (8) is installed, meshing with teeth of the large diameter cluster gear (3F). The counterbore on the input gear (8) locates on the shoulder of the thrust spacer (9). This is to be a slip fit and operate freely.

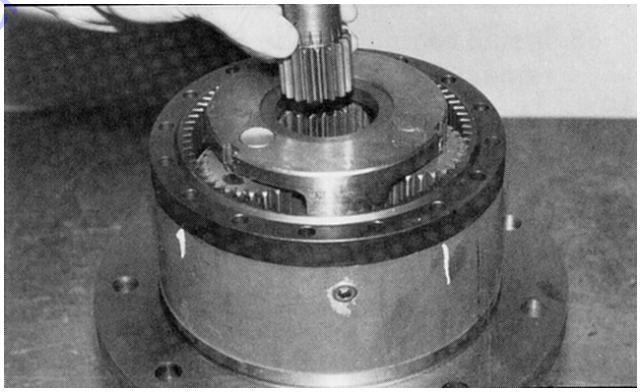

Go to Discount Equipment.com to order your parts

9. Thrust washer (10) is installed onto the input gear (8) and should locate on the gear teeth shoulder.

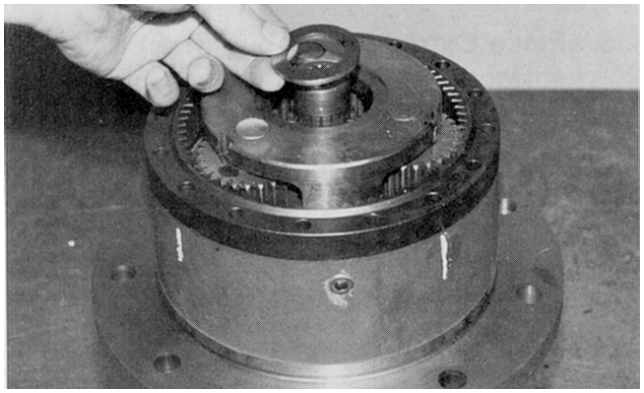

10. Thrust washer (11) is installed into the counterbore of the carrier (3).

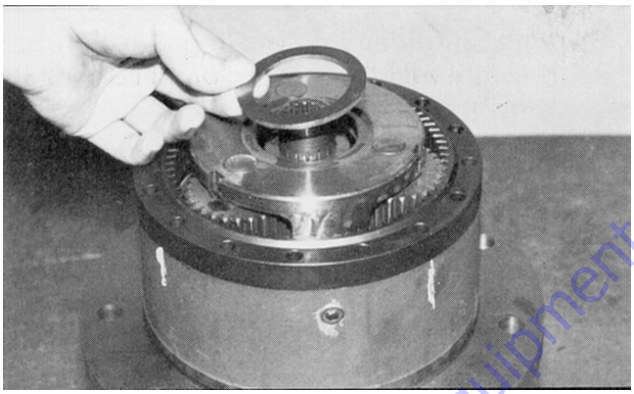

11. Place O-ring (5) into cover (6) counterbore. Use petroleum jelly to hold O-ring in place.

⚠ CAUTION

BEWARE OF SHARP EDGES OF THE COUNTERBORE WHILE SEATING THIS O-RING.

12. The cover (6) is now installed on this assembly. Taking care to correctly align pipe plug hole (20) with those in the hub (1J), usually 90° to one another.
Locate the 4 counterbore holes in hub (1G) (marked in step 3) and install 4 shoulder bolts (13). A slight tap with a hammer may be necessary to align shoulder bolt with hub (1G) counterbore.

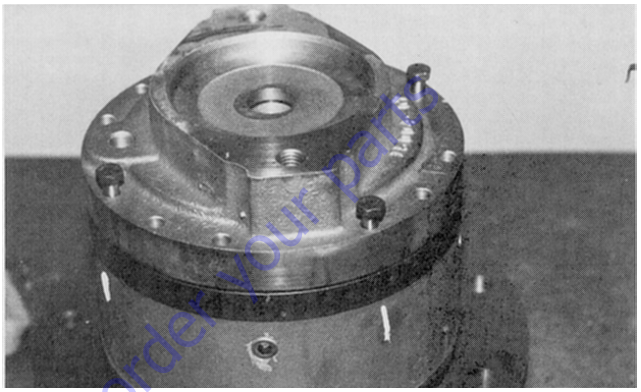

13. Install regular grade 8 bolts (12) into remaining holes.

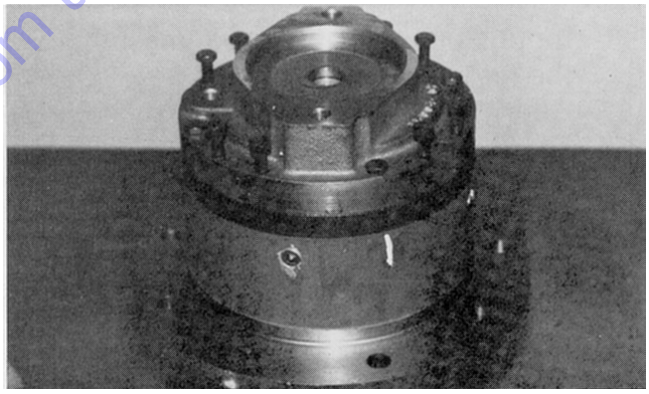

14. Pipe plugs (20) are to be installed into cover (6) using a lubricant of some sort.

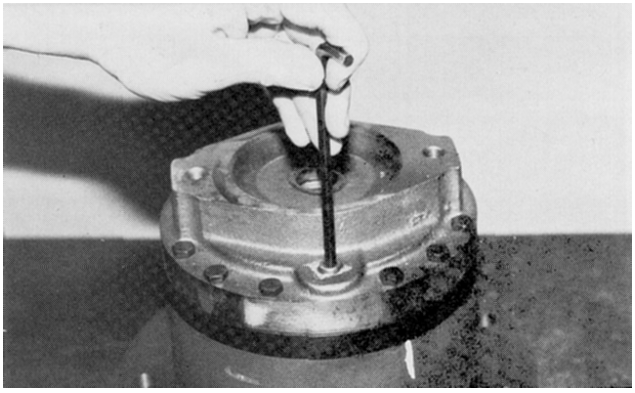

Go to Discount-Equipment.com to order your parts

15. Torque shoulder bolts (13) to 23-27 ft. lbs. and regular grade 8 bolts (12) to 23-27 ft. lbs.

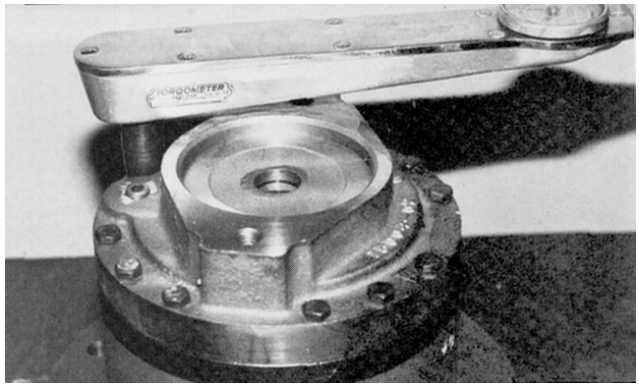

This completes the assembly. The unit must be filled one-half full of EP 90 lubricant before operation if the unit is mounted horizontally, and completely filled if mounted vertically. In vertical mounting application case oil circulation is recommended.

Hub Shaft Sub-Assembly

1. Press bearing cone (1D) onto shaft (1A).

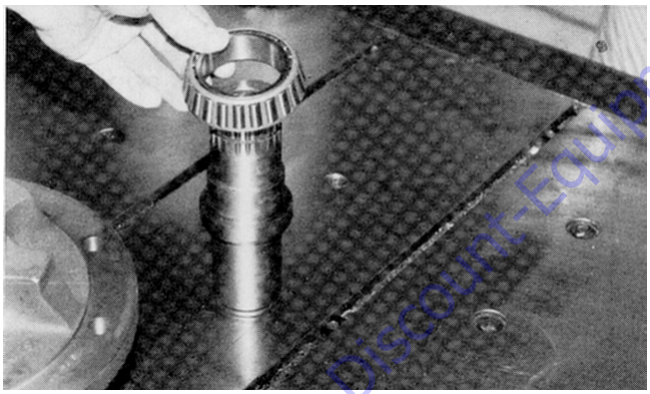

2. Press bearing cup (1C) into hub (1G) taking care to insure cup start square with the bore of the hub.

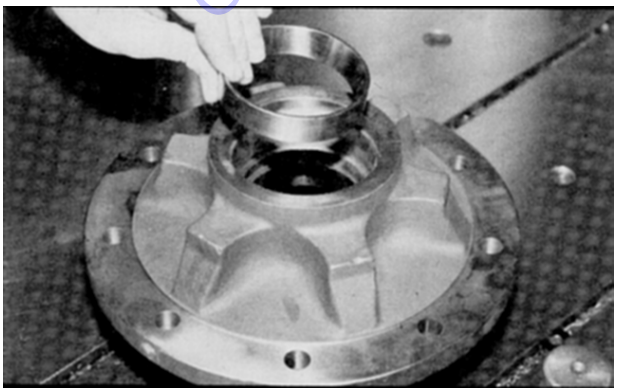

3. Invert hub (1G) and press bearing cup (1E) into inter counterbore of hub (1G).

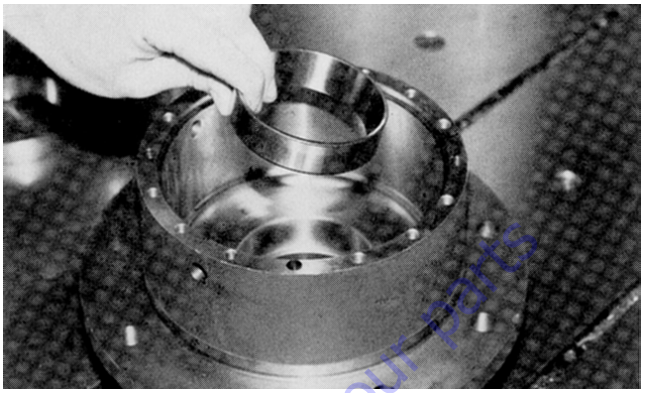

4. Returning the hub (1G) to locate on the large diameter end, the output shaft (1A) is carefully installed into the hub (1G).

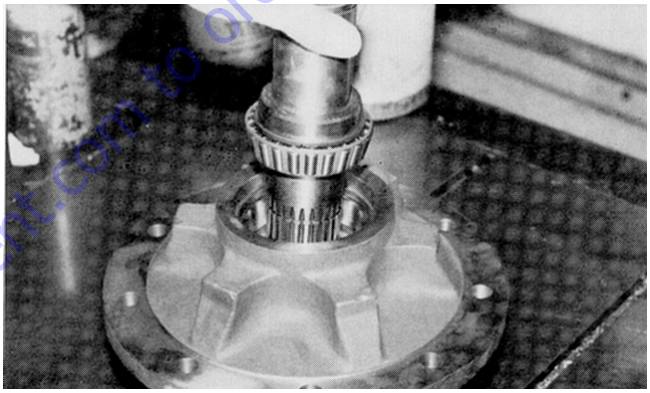

5. The shaft seal (1B) is installed over the output shaft (1A) and into the counterbore of the hub (1G). Care should be taken to insure the seal (1B) is being correctly installed (smooth face up and located just flush with the counterbore face).

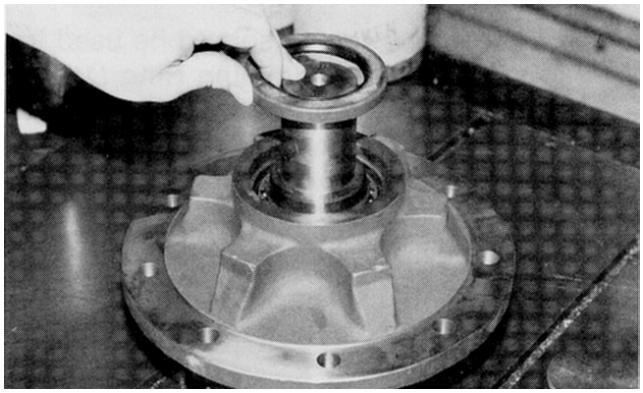

Go to Discount-Equipment.com to order your parts

6. The bearing cone (1F) is an interference fit and has to be pressed or tapped on.

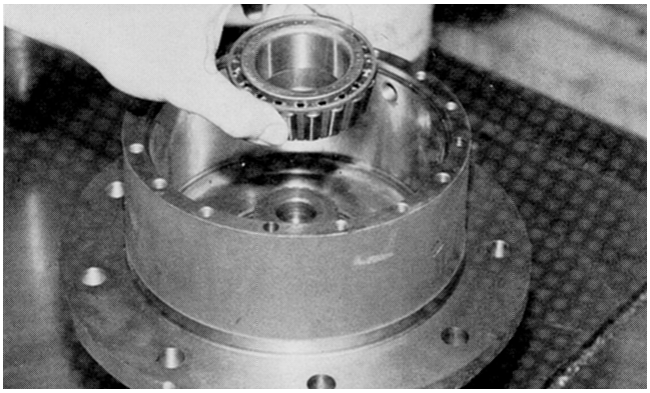

7. Pipe plugs (1J & 1K) should be checked and/ or installed at this time in the assembly.

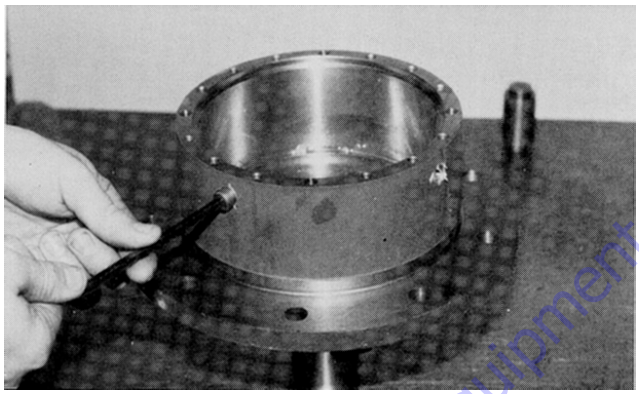

8. Bearing spacer (1H) is installed around the output shaft (1A) and locates on bearing cone (1F).

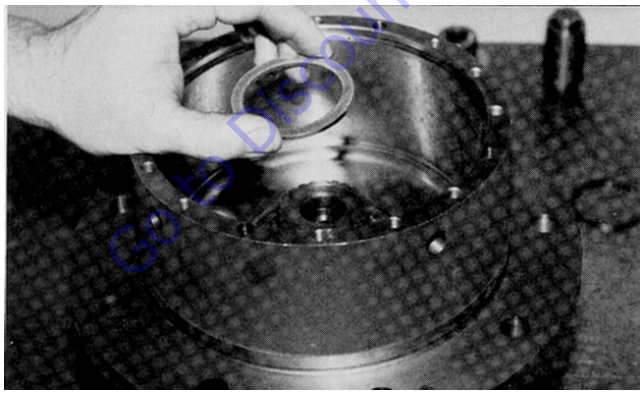

9. Retaining ring (1I) installed into groove provided in the output shaft (1A). This retaining ring (1I) should never be reused in a repair or rebuild.

⚠ CAUTION

EYE PROTECTION SHOULD BE WORN DURING THIS PROCEDURE.

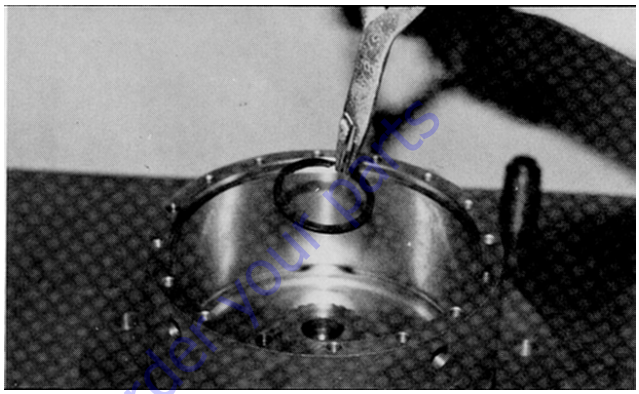

10. A soft metal punch should be used to insure that this retaining ring (1I) is completely seated in the groove of the output shaft (1A).

⚠ CAUTION

EYE PROTECTION SHOULD BE WORN DURING THIS PROCEDURE.

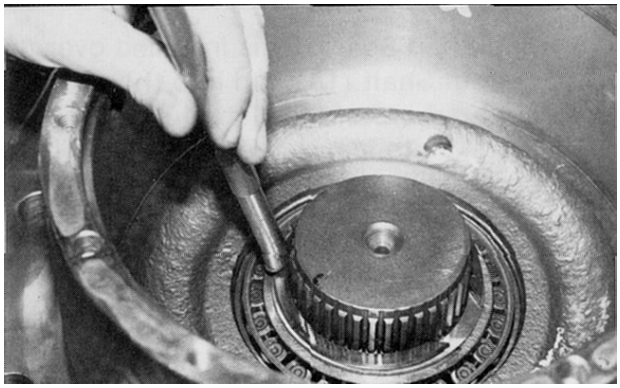

Go to Discount-Equipment.com to order your parts

11. Upon completion of step 10, rap the internal end of the output shaft (1A) twice with a piece of soft metal rod. This will release the preload which was on the bearings.

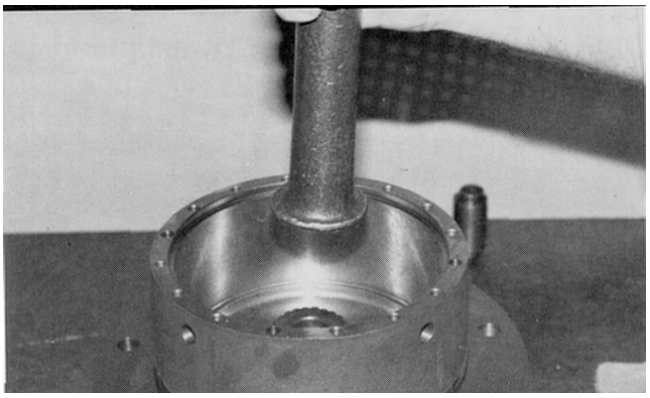

This completes the hub shaft sub-assembly —items (1A) through (1J). If this assembly is not going to be used right away, it should be oiled and covered to help prevent rusting,

Carrier Sub-Assembly

1. Apply a coat of grease or petroleum jelly to cluster gear bore.

2. Place sixteen needle rollers into cluster gear bore.

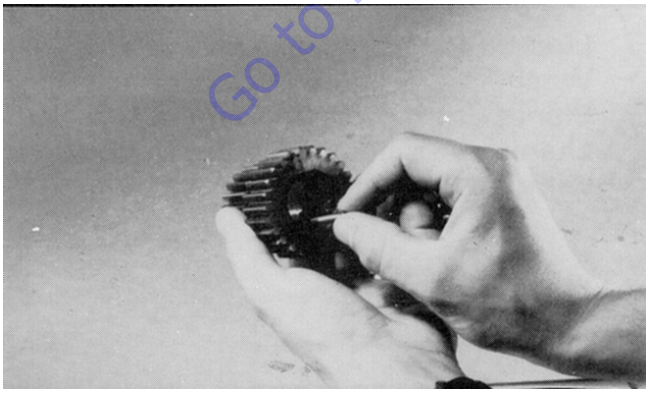

3. Place spacer washer into opposite side of cluster gear and against needle rollers.

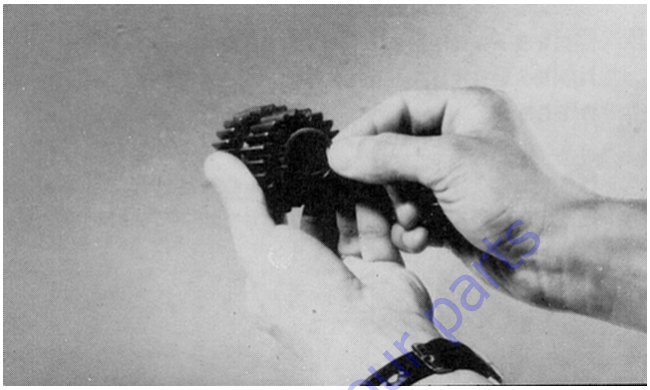

4. Place second set of sixteen needle rollers into cluster gear.

Go to Discount-Equipment.com to order your parts

5. Apply grease or petroleum jelly to the tang side of two thrust washers. Place thrust washers against bosses in carrier with washer tang fitting into slot in carrier outside diameter.

NOTE: *Some old style carriers will not have slots and tangs should be located inside boss relief.*

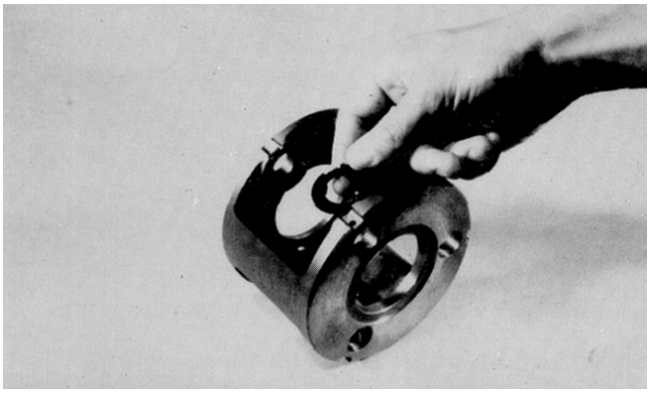

6. While keeping thrust washers in place, slide cluster gear into carrier with the larger gear on the side with the small pin hole.

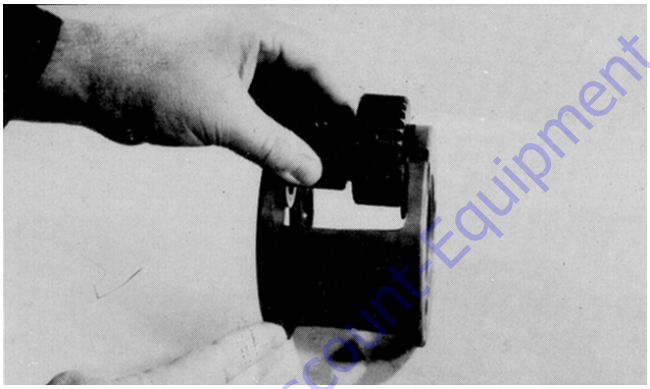

7. Line up cluster gear and thrust washer with hole in carrier and slide planet shaft through. Line up chamfered side of hole in planet shaft with pin hole in carrier.

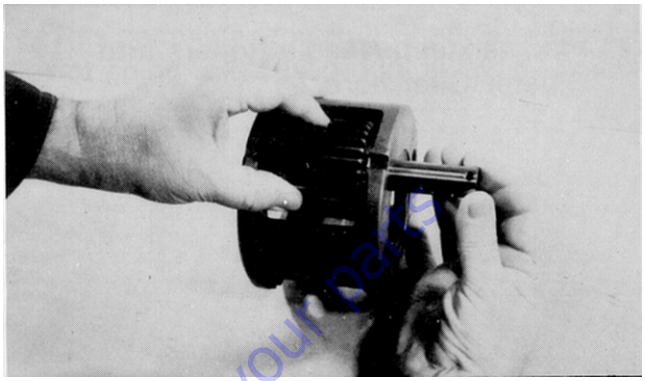

8. Drive anti-roll pin flush into carrier hole, thereby locking planet shaft into place.
Repeat these steps for remaining two cluster gears to complete carrier assembly.

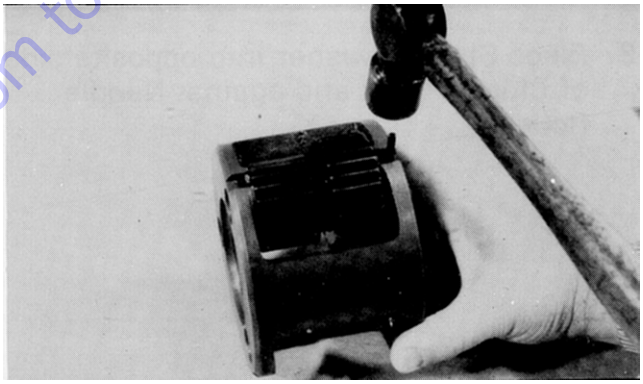

Go to Discount-Equipment.com to order your parts

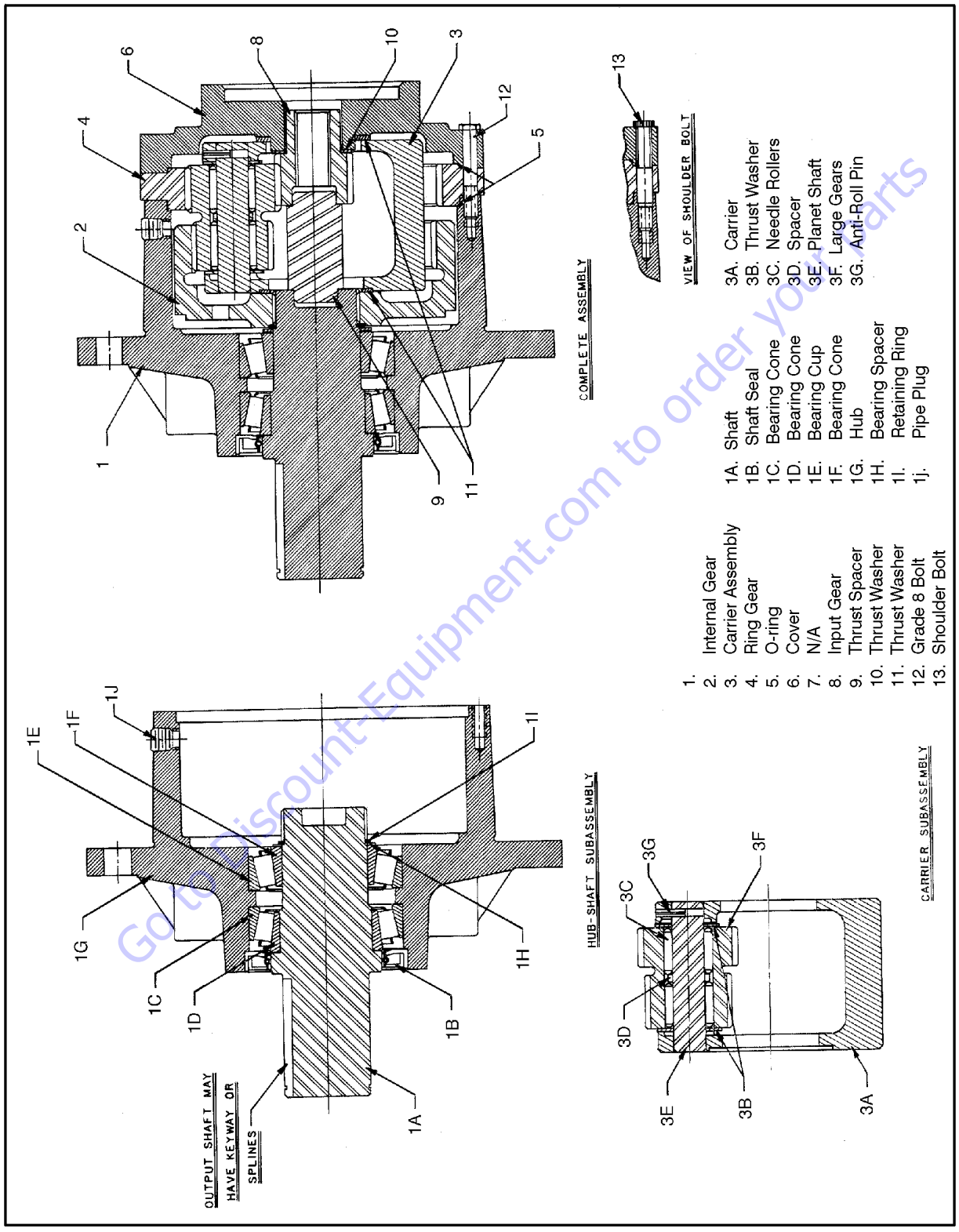

Figure 3-45. Swing Drive Hub (Fairfield) (SN 0300074383 through 0300134352)

Go to Discount-Equipment.com to order your parts

3.15 SWING DRIVE BRAKE (PRIOR TO SN 0300134352)

Disassembly

1. Supporting brake: remove the six socket head capscrews and washers (13 & 14) in equal increments to ensure the spring pressure within the brake is reduced gradually and evenly.

   If a press is available, the cylinder housing (8) can be restrained while removing the six capscrews and washers (13 & 14).

   The brake assembly can now be fully dismantled and the parts examined.

2. Remove cylinder housing (8) and piston (9) subassembly and dismantle if required, removing O-ring seals (15 & 17) and backing rings (16 & 18) as necessary.

3. Remove gasket (7) from housing (2).

4. Remove friction plates (3 & 6) and pressure plate (4).

5. Remove two dowel pins (19).

6. Remove springs (22 & 23).

7. Should it be necessary to replace ball bearing (10) or shaft seal (12), reverse remainder of brake subassembly, supporting on face C of housing (2).

8. Remove internal retaining ring (11).

9. Using arbor press or similar to break Loctite seal, remove brake shaft (1) from housing (2) and lay aside.

10. Reverse housing (2) and press out ball bearing (10). Shaft seal (12) can also be removed if necessary.

Inspection

1. Inspect friction plates (3 & 6) and friction surface on pressure plate (4) for wear or damage.

2. Examine friction plates (3) and brake shaft (1) for wear or damage to the splines.

3. Examine input and output splines of brake shaft (1) for wear or damage.

4. Examine compression springs (22 & 23) for damage or fatigue.

5. Check ball bearing (10) for axial float or wear.

6. Examine o-ring seals (15 & 17) and backing rings (16 & 18) for damage.

Assembly

1. Lightly lubricate rotary shaft seal (12) and assemble to housing (2) taking care not to damage seal lip.

2. Apply ring of Loctite 641 or equivalent adhesive to full circumference of housing (2) bearing recess adjacent to shoulder.

   Apply complete coverage of Loctite 641 to outside diameter of bearing (10) and assemble fully In housing (2), retaining with internal retaining ring (11). Remove excess adhesive with a clean cloth.

   Press shaft (1) through bearing (10), ensuring bearing inner ring Is adequately supported.

3. Assemble correct quantity of springs (22 & 23) in orientation required.

4. Lubricate o-ring seals (15 & 17) with Molykote 55M (or equivalent) silicon grease and assemble together with backing rings (16 & 18) to piston (9). To ensure correct brake operation. It is important that the backing rings are assembled opposite to the pressurized side of piston.

5. Correctly orientate piston (9) aligning spaces with the two dowel pin holes and, assemble into cylinder housing (8) taking care not to damage seals and carefully lay aside.

6. Locate 2-off pins (19) in housing (2) followed by pressure plate (4) and friction plates i.e. an inner (3) followed by an outer (6) in correct sequence.

7. Position gasket (7) in correct orientation.

8. Align two holes in cylinder with dowel pins (19) and assemble piston & cylinder sub-assembly to remainder of brake securing with 6 capscrews and washers (13 & 14). Torque to 55 ft. lbs. (75 Nm).

NOTE: *The use of a suitable press (hydraulic or arbor) pressing down on cylinder end face B will ease assembly of the capscrews (13).*

Go to Discount-Equipment.com to order your parts

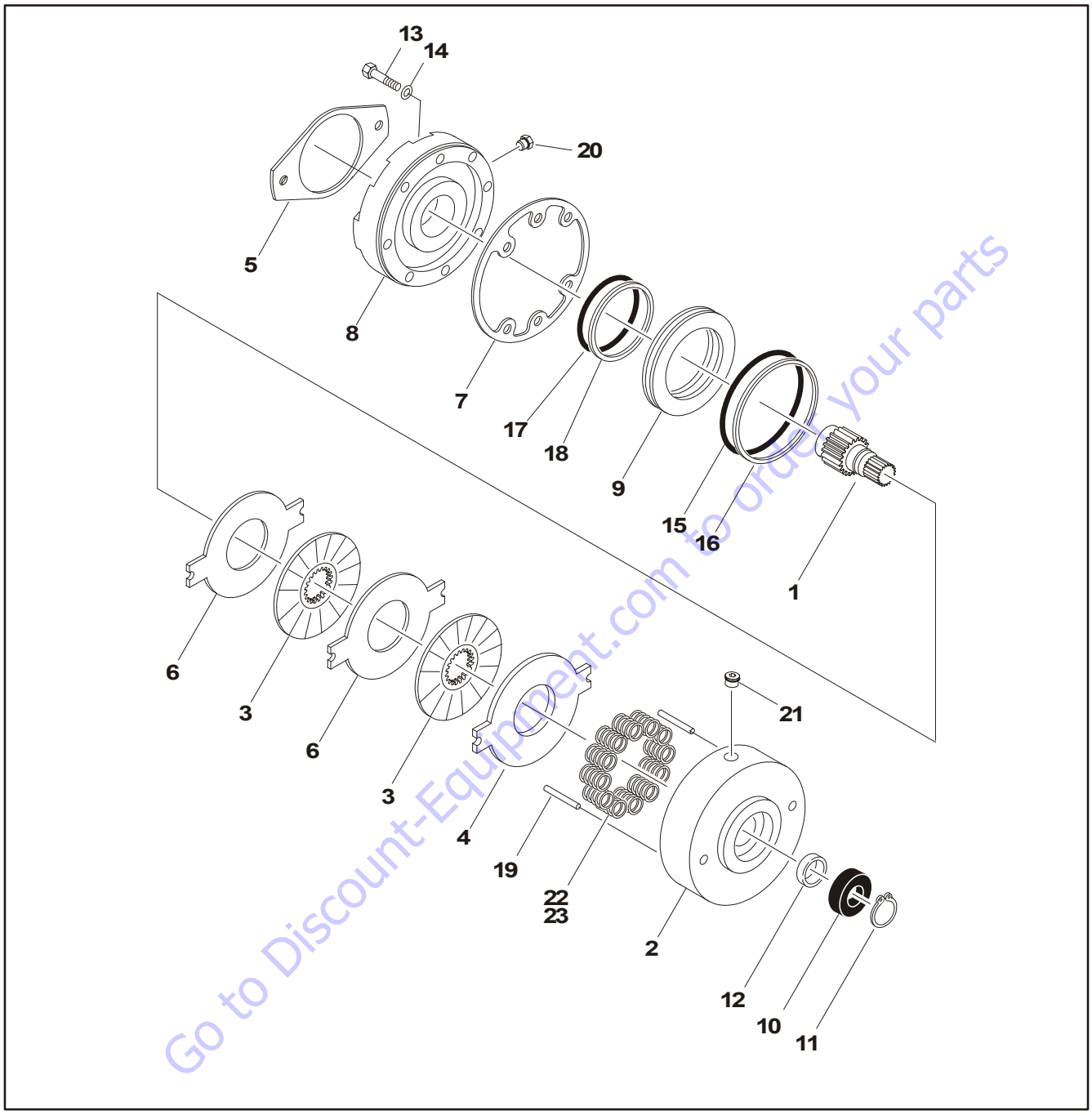

Go to Discount-Equipment.com to order your parts

1. Shaft
2. Housing
3. Friction Plate
4. Pressure Plate
5. Gasket
6. Outer Plate
7. Gasket
8. Cylinder
9. Piston
10. Ball Bearing
11. Retaining Ring
12. Shaft Seal
13. Capscrew
14. Lockwasher
15. O-ring
16. Backup Ring
17. O-ring
18. Backup Ring
19. Dowel Pin
20. Plug
21. Plug
22. Spring (Natural)
23. Spring (Blue)

Figure 3-46. Swing Drive Brake (Prior to SN 0300134352)

3.16 SWING MOTOR (PRIOR TO SN 0300134352)

Disassembly and inspection

1. Place the Torqlink™ in a soft jawed vice, with coupling shaft (12) pointed down and the vise jaws clamping firmly on the sides of the housing (18) mounting flange or port bosses. Remove manifold port O-Rings (18A) if applicable.

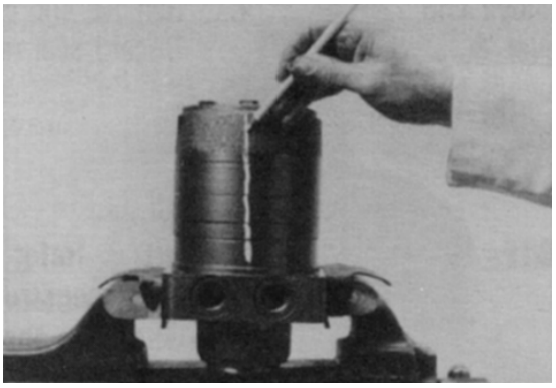

⚠ CAUTION

IF THE TORQLINK™ IS NOT FIRMLY HELD IN THE VISE, IT COULD BE DISLODGED DURINGTHE SERVICE PROCEDURES, CAUSING INJURY.

2. Scribe an alignment mark down and across the Torqlink™ components from end cover (2) to housing (18) to facilitate reassembly orientation where required. Loosen two shuttle or relief valve plugs (21) for disassembly later if included in end cover. 3/16 or 3/8 in. (4.76 or 9.52 mm) Allen wrench or 1 in. hex socket required.

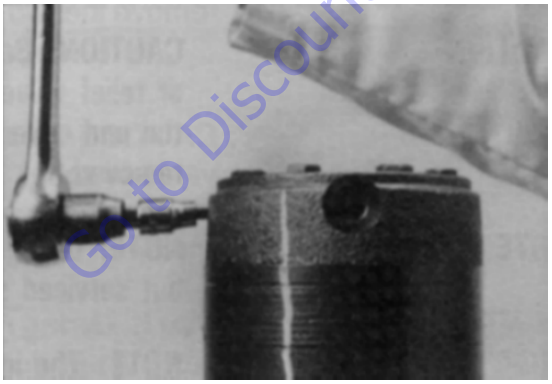

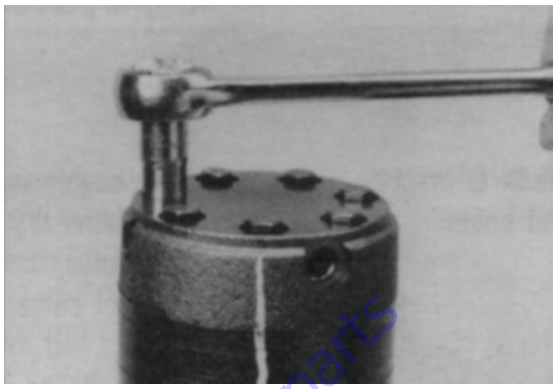

3. Remove the five, six, or seven special ring head bolts (1) using an appropriate 1/2 or 9/16 in. (12.7 or 14.28 mm) size socket. Inspect bolts for damaged threads, or sealing rings, under the bolt head. Replace damaged bolts.

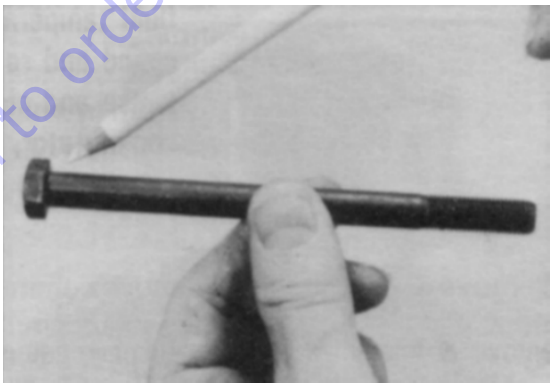

4. Remove end cover assembly (2) and seal ring (4). Discard seal ring.

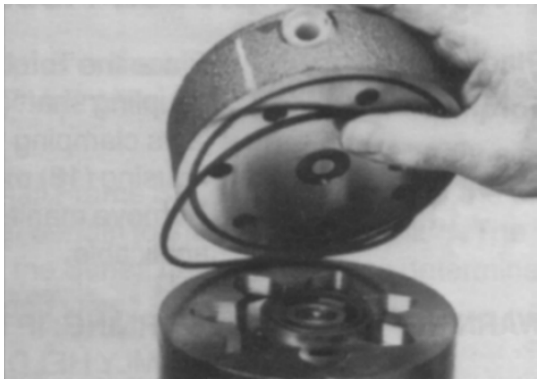

NOTE: *Refer to the appropriate "alternate cover construction" on the exploded view to determine the end cover construction being serviced.*

Go to Discount-Equipment.com to order your parts

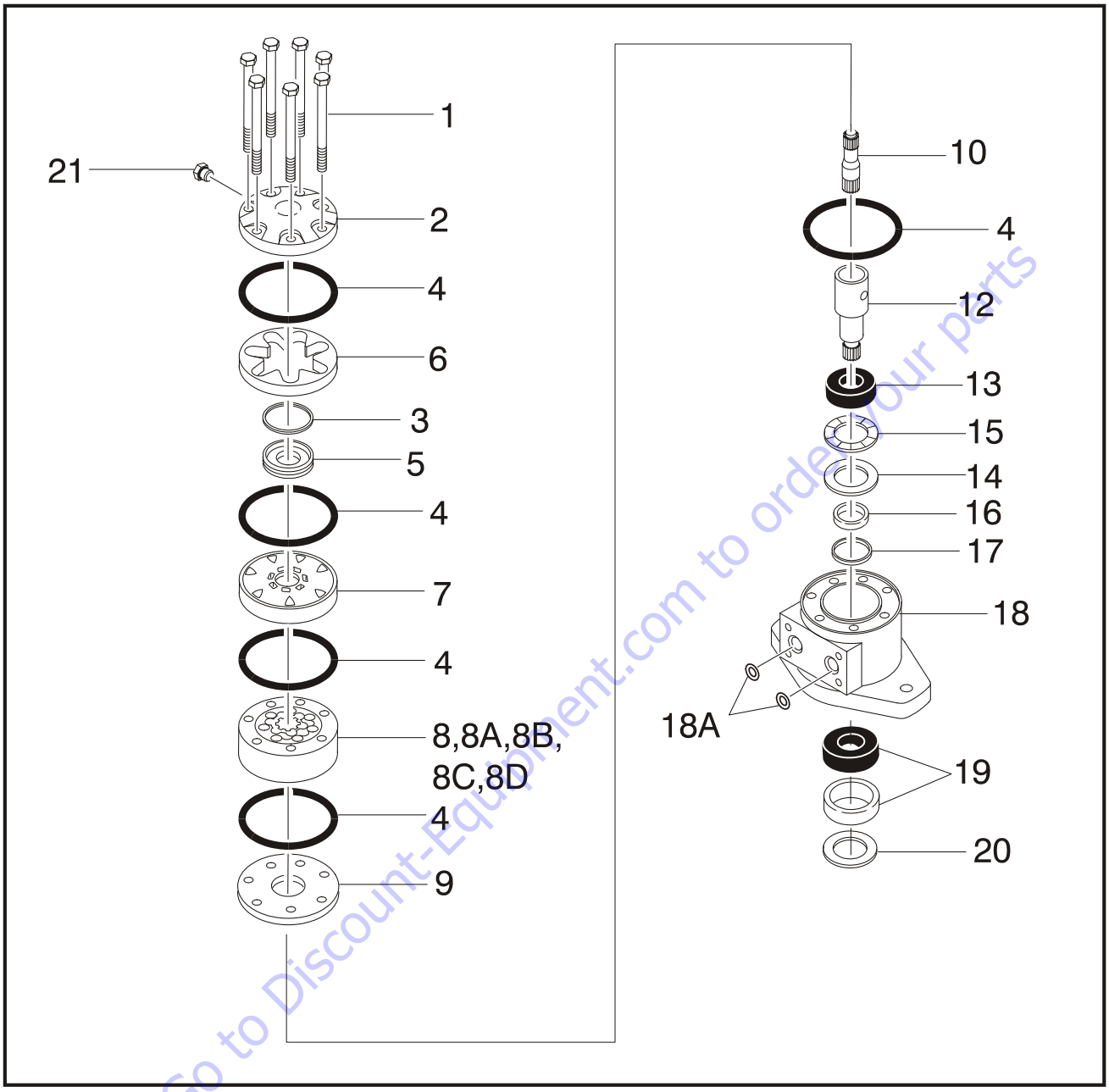

Go to Discount-Equipment.com to order your parts

1. Special Bolts
2. End Cover
3. Seal Ring-Commutator
4. Seal Ring
5. Commutator Ring
6. Commutator Ring
7. Manifold
8. Rotor Set
8A. Rotor
8B. Stator or Stator Vane
8C. Vane
8D. Stator Half
9. Wear Plate
10. Drive Link
12. Coupling Shaft
13. Bearing/Bushing, Inner
14. Thrust Washer
15. Thrust Bearing
16. Seal
17. Backup Washer
18. Housing
18A. O-Ring
19. Bearing/Bushing, Outer
20. Dirt & Water Seal
21. Plug

Figure 3-47. Swing Drive Motor (Prior to SN 0300134352)

5. If the end cover (2) is equipped with shuttle valve components, remove the two previously loosened plugs (21).

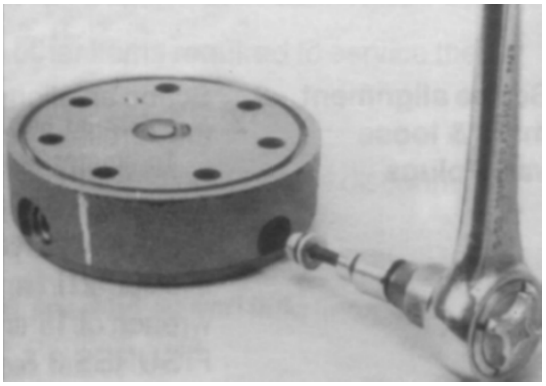

NOTICE

BE READY TO CATCH THE SHUTTLE VALVE OR RELIEF VALVE COMPONENTS THAT WILL FALL OUT OF THE END COVER VALVE CAVITY WHEN THE PLUGS ARE REMOVED.

NOTE: *The insert and if included the orifice plug in the end cover (2) must not be removed as they are serviced as an integral part of the end cover.*

6. Thoroughly wash end cover (2) in proper solvent and blow dry. Be sure the end cover valve apertures, including the internal orifice plug, are free of contamination. Inspect end cover for cracks and the bolt head recesses for good bolt head sealing surfaces. Replace end cover as necessary.

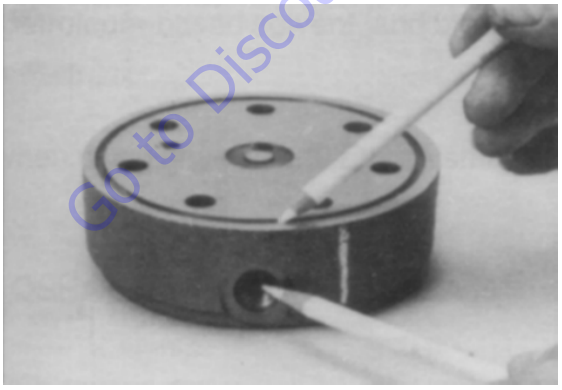

NOTE: *A polished pattern (not scratches) on the cover from rotation of the commutator (5) is normal. Discoloration would indicate excess fluid temperature, thermal shock, or excess speed and require system investigation for cause and close inspection of end cover, commutator, manifold, and rotor set.*

7. Remove commutator ring (6). Inspect commutator ring for cracks, or burrs.

8. Remove commutator (5) and seal ring (3) Remove seal ring from commutator, using an air hose to blow air into ring groove until seal ring is lifted out and discard seal ring. Inspect commutator for cracks or burrs, wear, scoring, spalling or brinelling. If any of these conditions exist, replace commutator and commutator ring as a matched set.

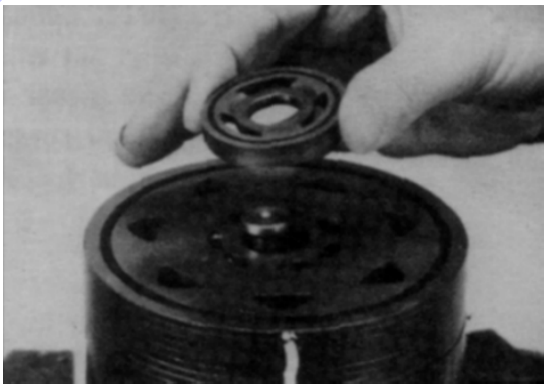

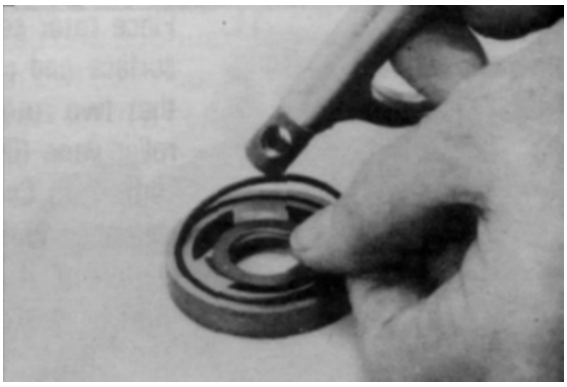

Go to Discount-Equipment.com to order your parts

9. Remove manifold (7) and inspect for cracks surface scoring, brinelling or spalling. Replace manifold if any of these conditions exist. A polished pattern on the ground surface from commutator or rotor rotation is normal. Remove and discard the seal rings (4) that are on both sides of the manifold.

NOTE: *The manifold is constructed of plates bonded together to form an integral component not subject tofurtherdisassemblyforservice.Compare configuration of both sides oft hem an if old to ensure that same surface is reassembled against the rotor set.*

10. Remove rotor set (8) and warplane (9), together to retain the rotor set in its assembled form, maintaining the same rotor vane (8C) to stator (8B) contact surfaces. The drive link (10) may come away from the coupling shaft (12) with the rotor set, and wearplate.You may have to shift the rotor set on the warplane to work the drive link out of the rotor (8A) and warplane. Inspect the rotor set in its assembled form for nicks, scoring, or spalling on any surface and for broken or worn splines. If the rotor set component requires replacement, the complete rotor set must be replaced as it is a matched set. Inspect the warplane for cracks, brinelling, or scoring. Discard seal ring (4) that is between the rotor set and wearplate.

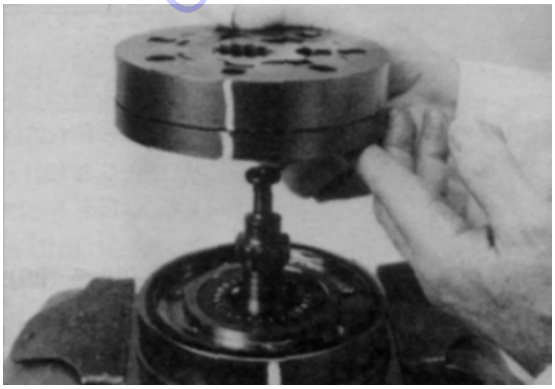

NOTE: *The rotor set (8) components may become disassembled during service procedures. Marking the surface of the rotor and stator that is facing UP, with etching ink or grease pencil before removal from Torqlink™ will ensure correct reassembly of rotor into stator and rotor set into Torqlink™. Marking all rotor components and mating spline components for exact repositioning at assembly will ensure maximum wear life and performance of rotor set and Torqlink™.*

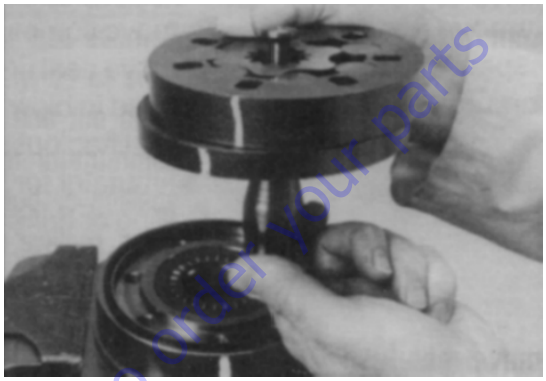

NOTE: *Series TG Torqlinks™ may have a rotor set with two stator halves (8B) with a seal ring (4) between them and two sets of seven vanes (8C). Discard seal ring only if stator halves become disassembled during the service procedures.*

NOTE: *A polished pattern on the wear plate from rotor rotation is normal.*

11. Place rotor set (8) and wear plate (9) on a flat surface and center rotor (8A) in stator (8B) such that two rotor lobes (180 degrees apart) and a roller vane (8C) centerline are on the same stator centerline. Check the rotor lobe to roller vane clearance with a feeler gage at this common centerline. If there is more than 0.005 in. (0.13 mm) of clearance, replace rotor set.

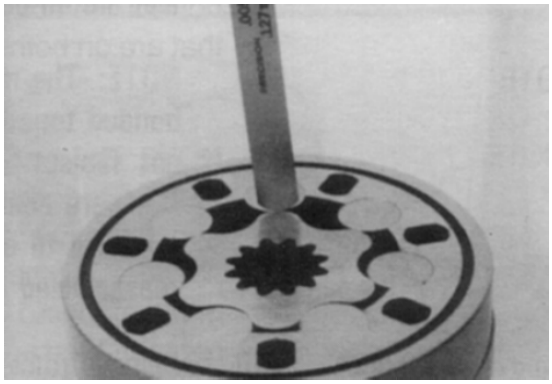

Go to Discount Equipment.com to order your parts

NOTE: *If rotor set (8) has two stator halves (8B & 8D) and two sets of seven vanes (8C & 8E) as shown in the alternate construction TG rotor set assembly view, check the rotor lobe to roller vane clearance at both ends of rotor.*

12. Remove drive link (10) from coupling shaft (12) if it was not removed with rotor set and wear plate. Inspect drive link for cracks and worn or damaged splines. No perceptible lash (play) should be noted between mating spline parts. Remove and discard seal ring (4) from housing (18).

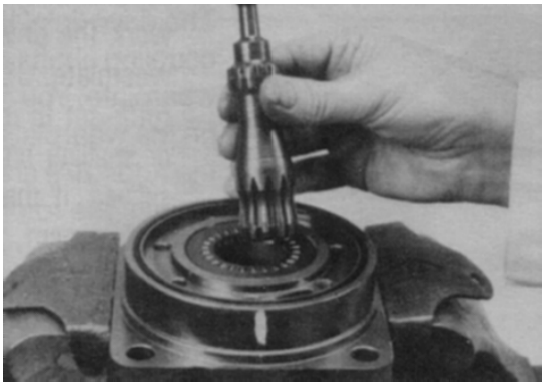

13. Remove thrust bearing (11) from top of coupling shaft (12). Inspect for wear, brinelling, corrosion and a full complement of retained rollers.

14. Check exposed portion of coupling shaft (12) to be sure you have removed all signs of rust and corrosion which might prevent its withdrawal through the seal and bearing. Crocus cloth or fine emery paper may be used.

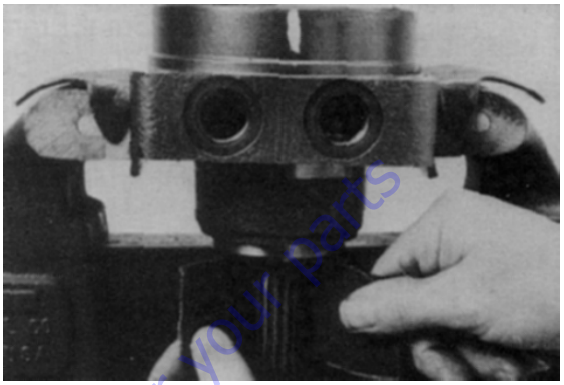

15. Remove coupling shaft (12), by pushing on the output end of shaft. Inspect coupling shaft bearing and seal surfaces for spalling, nicks, grooves, severe wear or corrosion and discoloration. Inspect for damaged or worn internal and external splines or keyway. Replace coupling shaft if any of these conditions exist.

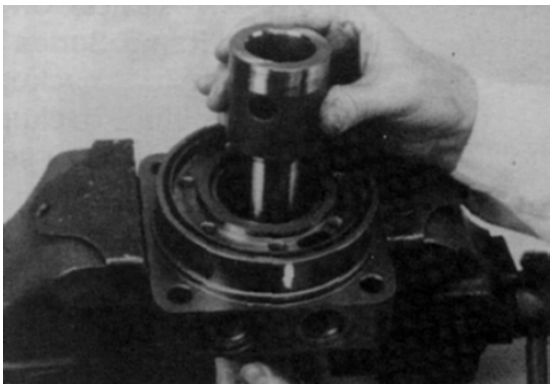

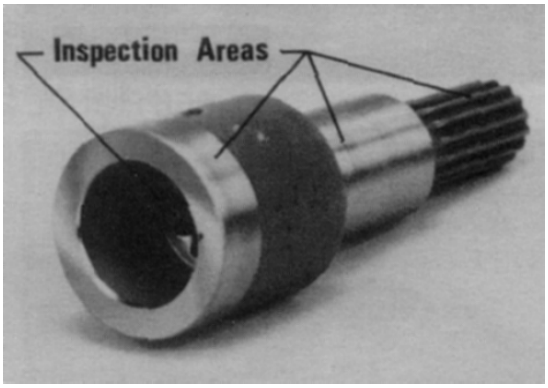

Go to Discount-Equipment.com to order your parts

NOTE: *Minor shaft wear in seal area is permissible. If wear exceeds 0.020 in. (0.51 mm) diametrically, replace coupling shaft.*

NOTE: *A slight "polish" is permissible in the shaft bearing areas. Anything more would require coupling shaft replacement.*

16. Remove and discard seal ring (4) from housing (18).

17. Remove thrust bearing (15) and thrust washer (14) Inspect for wear, brinelling, corrosion and a full complement of retained rollers.

18. Remove seal (16) and back up washer (17) from Small Frame, housing (18). Discard both.

19. Remove housing (18) from vise, invert it and remove and discard seal (20). A blind hole bearing or seal puller is required.

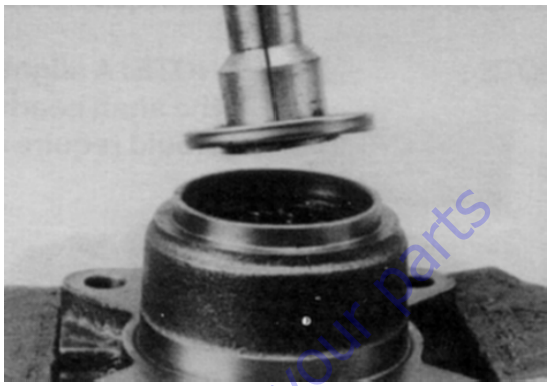

20. Inspect housing (18) assembly for cracks, the machined surfaces for nicks, burrs, brinelling or corrosion. Remove burrs that can be removed without changing dimensional characteristics. Inspect tapped holes for thread damage. If the housing is defective in these areas, discard the housing assembly.

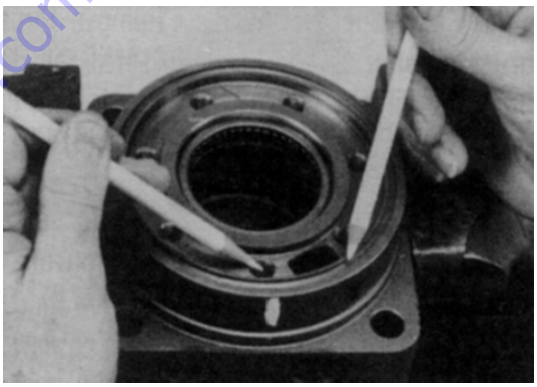

Go to Discount-Equipment.com to order your parts

21. If the housing (18) assembly has passed inspection to this point, inspect the housing bearings/bushings (19) and (13) and if they are captured in the housing cavity the two thrust washers (14) and thrust bearing (15). The bearing rollers must be firmly retained in the bearing cages, but must rotate and orbit freely. All rollers and thrust washers must be free of brinelling and corrosion. The bushing (19) or (13) to coupling shaft diameter clearance must not exceed 0.010 in. (0.025 mm). A bearing, bushing, or thrust washer that does not pass inspection must be replaced. If the housing has passed this inspection the disassembly of the Torqlink™ is completed.

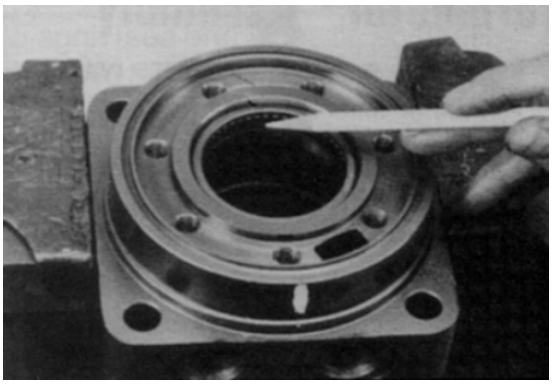

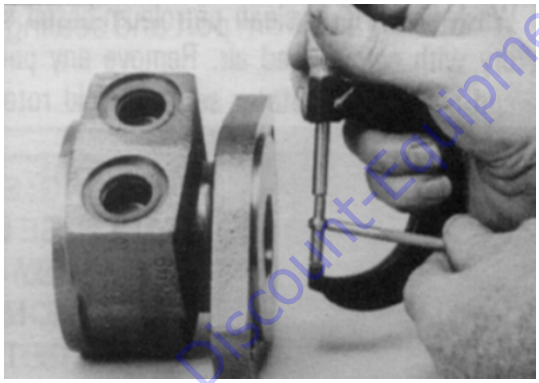

NOTE: *The depth or location of bearing/bushing (13) in relation to the housing wear plate surface and the depth or location of bearing/bushing (19) in relation to the beginning of bearing/bushing counter bore should be measured and noted before removing the bearings/bushings. This will facilitate the correct reassembly of new bearings/bushings.*

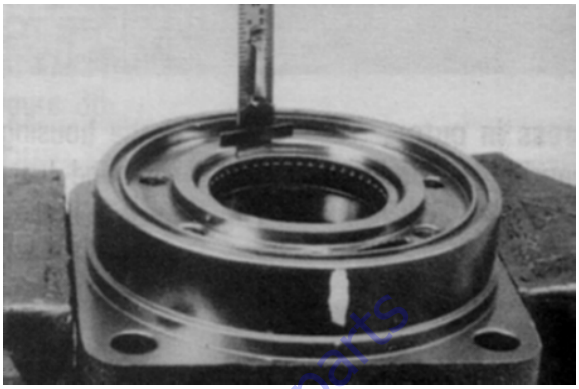

22. If the bearings, bushing or thrust washers must be replaced use a suitable size bearing puller to remove bearing/bushings (19) and (13) from housing (18) without damaging the housing. Remove thrust washers (14) and thrust bearing (15) if they were previously retained in the housing by bearing (13).

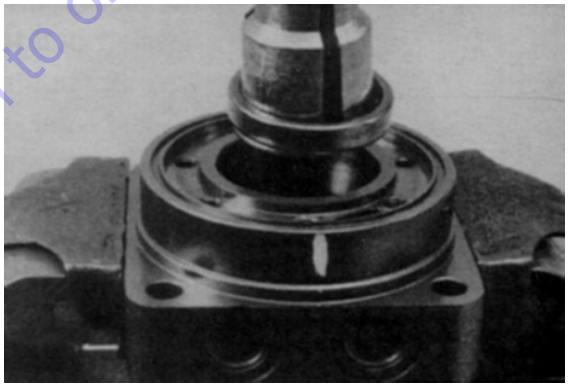

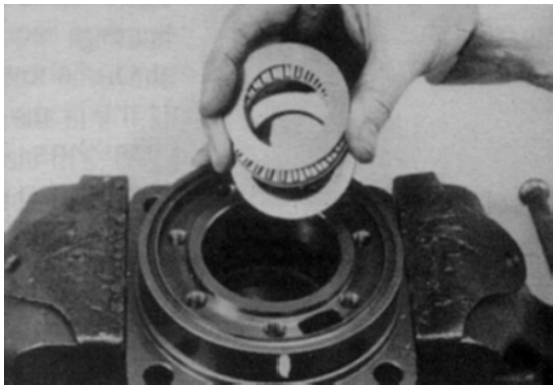

Go to Discount-Equipment.com to order your parts

Assembly

Replace all seals and seal rings with new ones each time you reassemble the Torqlink™ unit. Lubricate all seals and seal rings with SAE 10W40 oil or clean grease before assembly.

NOTE: *Individual seals and seal rings as well as a complete seal kit are available. The parts should be available through most OEM parts distributors or Parker approved Torqlink™ distributors. (Contact your local dealer for availability).*

NOTE: *Unless otherwise indicated, do not oil or grease parts before assembly.*

Wash all parts in clean petroleum-based solvents before assembly. Blow them dry with compressed air. Remove any paint chips from mating surfaces of the end cover, commutator set, manifold rotor set, wear plate and housing and from port and sealing areas.

⚠ WARNING

SINCE THEY ARE FLAMMABLE, BE EXTREMELY CAREFUL WHEN USING ANY SOLVENT. EVEN A SMALL EXPLOSION OR FIRE COULD CAUSE INJURY OR DEATH.

⚠ CAUTION

WEAR EYE PROTECTION AND BE SURE TO COMPLY WITH OSHA OR OTHER MAXIMUM AIR PRESSURE REQUIREMENTS.

1. If the housing (18) bearing components were removed for replacement, thoroughly coat and pack a new outer bearing/bushing (19) with clean corrosion resistant grease recommended in the material section. Press the new bearing/bushing into the counterbore at the mounting flange end of the housing, using the appropriate sized bearing mandrel, which will control the bearing/ bushing depth.

   Torqlink™ housings require the use of bearing mandrel to press bearing/ bushing (19) into the housing to a required depth of 0.151/0.161 in. (3.84/4.09 mm) from the end of the bearing counterbore.

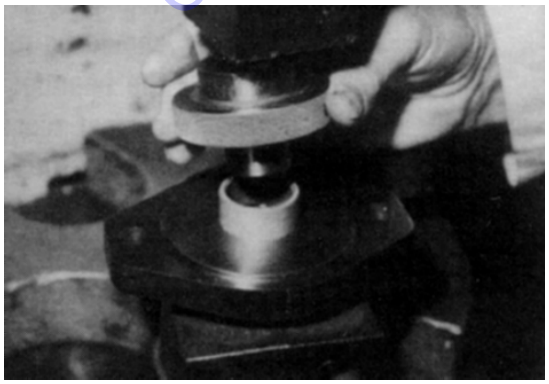

NOTE: *Bearing mandrel must be pressed against the lettered end of bearing shell. Take care that the housing bore is square with the press base and the bearing/bushing is not cocked when pressing a bearing/bushing into the housing.*

NOTICE

IF THE BEARING MANDREL SPECIFIED IN THE "TOOLS AND MATERIALS REQUIRED FOR SERVICING" SECTION IS NOT AVAILABLE AND ALTERNATE METHODS ARE USED TO PRESS IN BEARING/BUSHING (13) AND (19) THE BEARING/BUSHING DEPTHS SPECIFIED MUST BE ACHIEVED TO INSURE ADEQUATE BEARING SUPPORT AND CORRECT RELATIONSHIP TO ADJACENT COMPONENTS WHEN ASSEMBLED.

NOTICE

BECAUSE THE BEARING/BUSHINGS (13) AND (19) HAVE A PRESS FIT INTO THE HOUSING THEY MUST BE DISCARDED WHEN REMOVED. THEY MUST NOT BE REUSED.

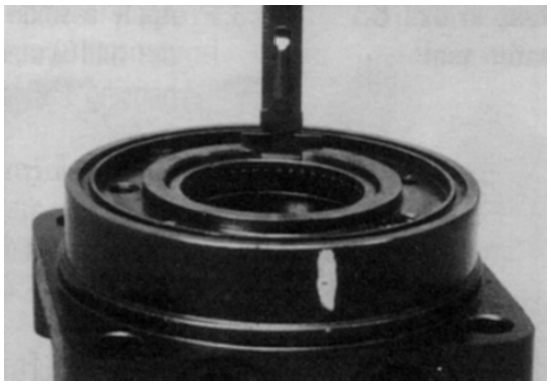

Go to Discount-Equipment.com to order your parts

2. The Torqlink™ inner housing bearing/bushing (13) can now be pressed into its counterbore in housing (18) flush to 0.03 in. (0.76 mm) below the housing wear plate contact face. Use the opposite end of the bearing mandrel that was used to press in the outer bearing/bushing (19).

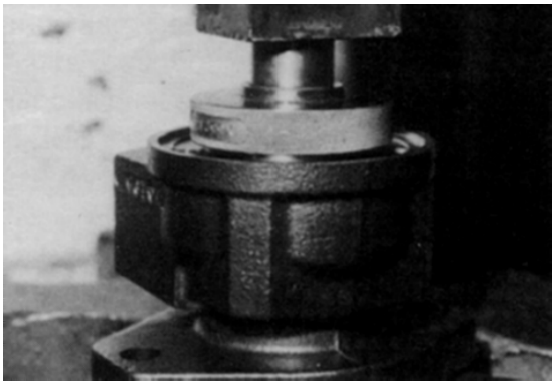

3. Press a new dirt and water seal (20) into the housing (18) outer bearing counterbore.

The Torqlink™ dirt and water seal (20) must be pressed in until its' flange is flush against the housing.

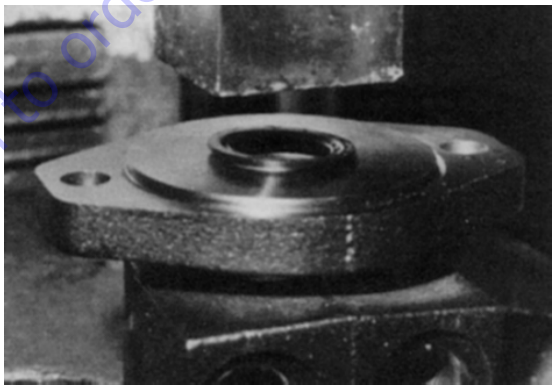

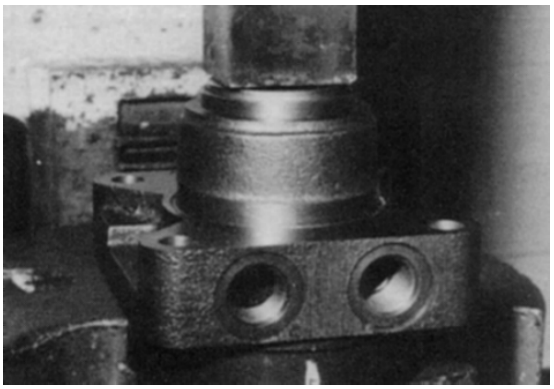

Go to Discount-Equipment.com to order your parts

4. Place housing (18) assembly into a soft jawed vise with the coupling shaft bore down, clamping against the mounting flange.

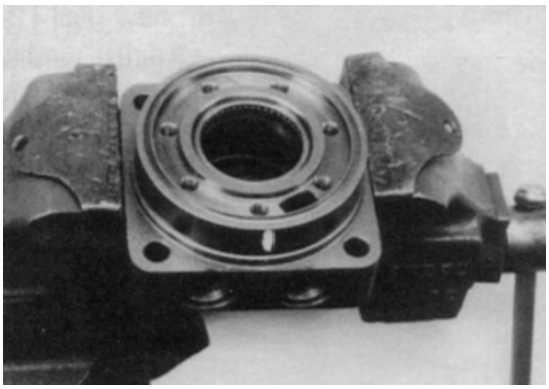

5. On the Torqlinks™ assemble a new backup washer (17) and new seal (16) with the seal lip facing toward the inside of Torqlink™, into their respective counterbores in housing (18) if they were not assembled in procedure 2.

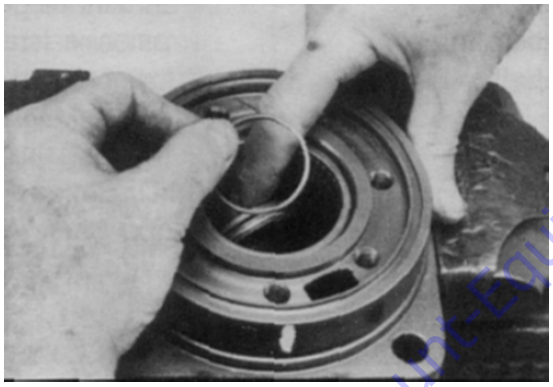

NOTICE

ORIGINAL DESIGN LARGE FRAME, TF & TG TORQLINKS™ THAT DO NOT HAVE BACKUP WASHER (25) WHEN DISASSEMBLED MUST BE ASSEMBLED WITH A NEW BACKUP WASHER (17), NEW BACKUP WASHER (25), AND NEW SEAL (16).

6. Assemble thrust washer (14) then thrust bearing (15) that was removed from the Torqlink™.

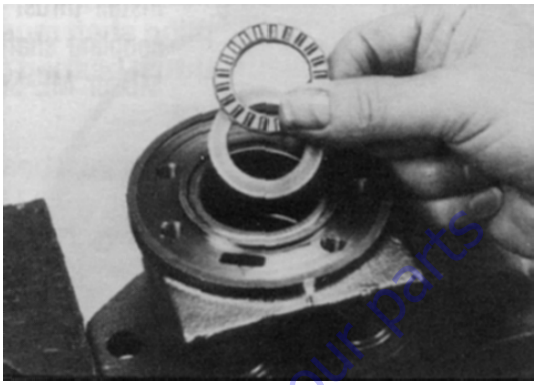

NOTE: *Torqlinks™ require one thrust washer (14) with thrust bearing (15). The coupling shaft will be seated directly against the thrust washer.*

7. Apply masking tape around splines or keyway on shaft (12) to prevent damage to seal.

8. Be sure that a generous amount of clean corrosion resistant grease has been applied to the lower (outer) housing bearing/bushing (19). Install the coupling shaft (12) into housing (18), seating it against the thrust bearing (15) in the housings.

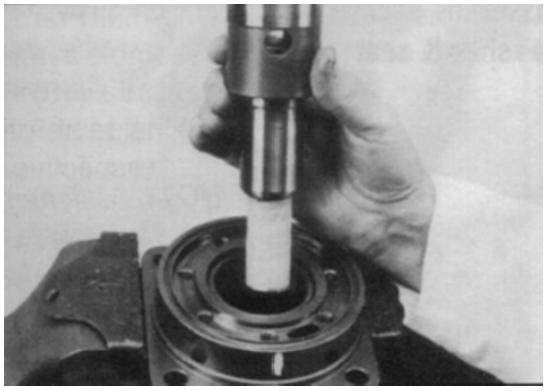

Go to Discount-Equipment.com to order your parts

NOTICE

THE OUTER BEARING (19) IS NOT LUBRICATED BY THE SYSTEM'S HYDRAULIC FLUID. BE SURE IT IS THOROUGHLY PACKED WITH THE RECOMMENDED GREASE, PARKER GEAR GREASE SPECIFICATION #045236, E/M LUBRICANT #K-70M OR MOBIL MOBILITH SHC R 460.

NOTE: *The coupling shaft (12) will be flush or just below the housing wear plate surface on Torqlinks. when properly seated. The coupling shaft must rotate smoothly on the thrust bearing package.*

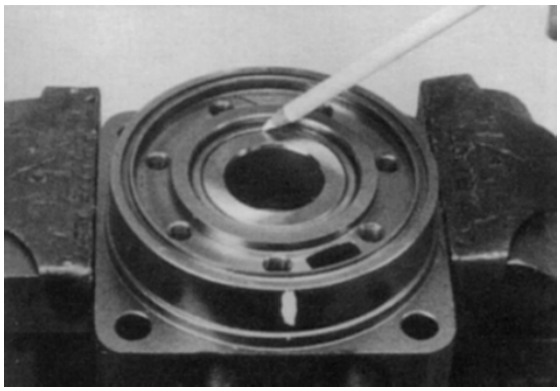

9. Apply a small amount of clean grease to a new seal ring (4) and insert it into the housing (18) seal ring groove.

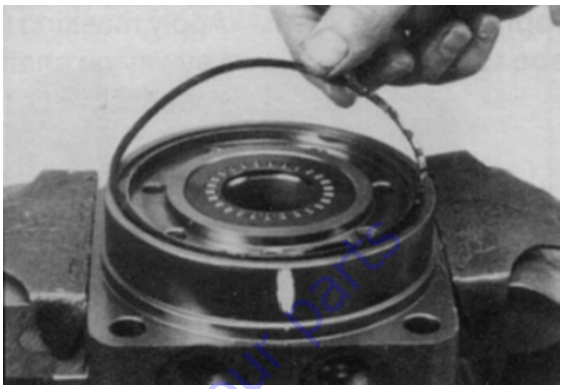

NOTE: *One or two alignment studs screwed finger tight into housing (18) bolt holes, approximately 180 degrees apart, will facilitate the assembly and alignment of components as required in the following procedures.The studs can be made by cutting off the heads of either 3/8-24 UNF 2A or 5/16-24 UNF 2A bolts as required that are over 0.5 in. (12.7 mm) longer than the bolts (1) used in the Torqlink.*

10. Install drive link (10) the long splined end down into the coupling shaft (12) and engage the drive link splines into mesh with the coupling shaft splines.

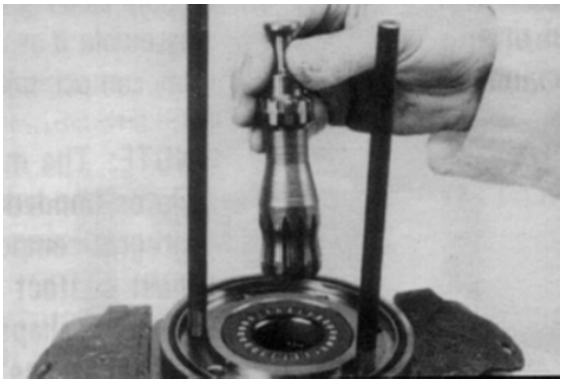

NOTE: *Use any alignment marks put on the coupling shaft and drive link before disassembly to assemble the drive link splines in their original position in the mating coupling shaft splines.*

Go to Discount-Equipment.com to order your parts

11. Assemble wear plate (9) over the drive link (10) and alignment studs onto the housing (18).

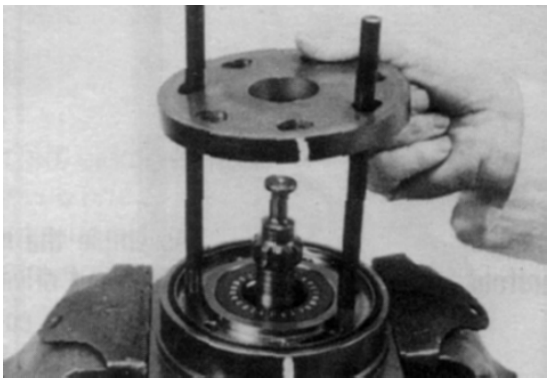

12. Apply a small amount of clean grease to a new seal ring (4) and assemble it into the seal ring groove on the wear plate side of the rotor set stator (8B).

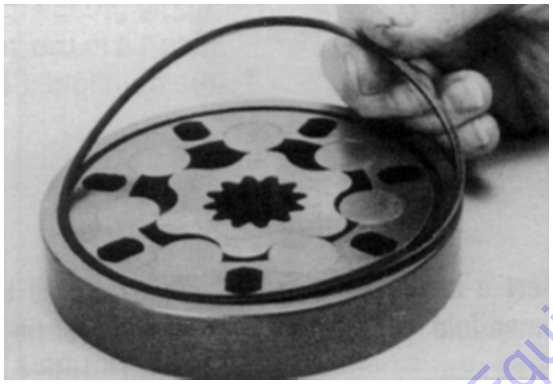

13. Install the assembled rotor set (8) onto wear plate (9) with rotor (8A) counterbore and seal ring side down and the splines into mesh with the drive link splines.

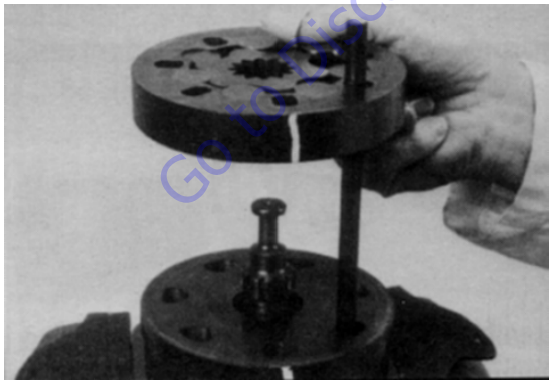

NOTE: *It may be necessary to turn one alignment stud out of the housing (18) temporarily to assemble rotor set (8) or manifold (7) over the drive link.*

NOTE: *If necessary, go to the appropriate, "Rotor Set Component Assembly Procedure."*

NOTE: *The rotor set rotor counterbore side must be down against wear plate for drive link clearance and to maintain the original rotor-drive link spline contact. A rotor set without a counterbore and that was not etched before disassembly can be reinstalled using the drive link spline pattern on the rotor splines if apparent, to determine which side was down.The rotor set seal ring groove faces toward the wear plate (9).*

14. Apply clean grease to a new seal ring (4) and assemble it in the seal ring groove in the rotor set contact side of manifold (7).

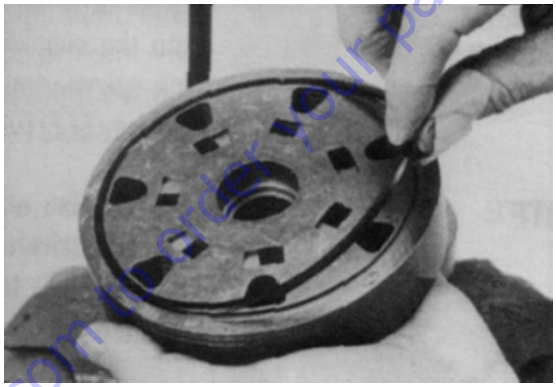

NOTE: *The manifold (7) is made up of several plates bonded together permanently to form an integral component.The manifold surface that must contact the rotor set has it's series of irregular shaped cavities on the largest circumference or circle around the inside diameter.The polished impression left on the manifold by the rotor set is another indication of which surface must contact the rotor set.*

15. Assemble the manifold (7) over the alignment studs and drive link (10) and onto the rotor set. Be sure the correct manifold surface is against the rotor set.

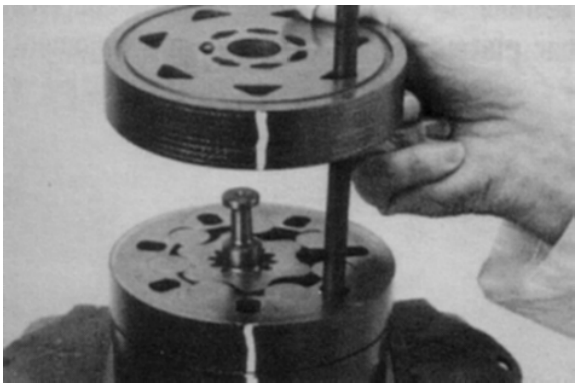

Go to Discount Equipment.com to order your parts

16. Apply grease to a new seal ring (4) and insert it in the seal ring groove exposed on the manifold.

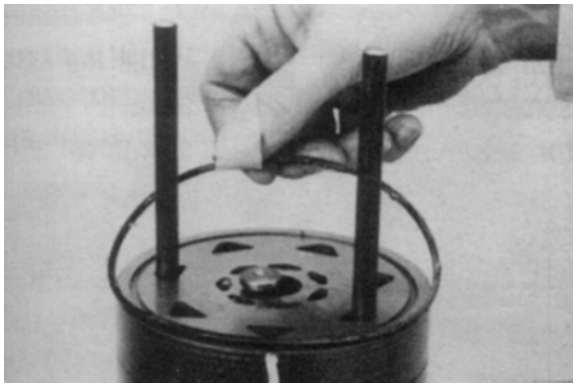

17. Assemble the commutator ring (6) over alignment studs onto the manifold.

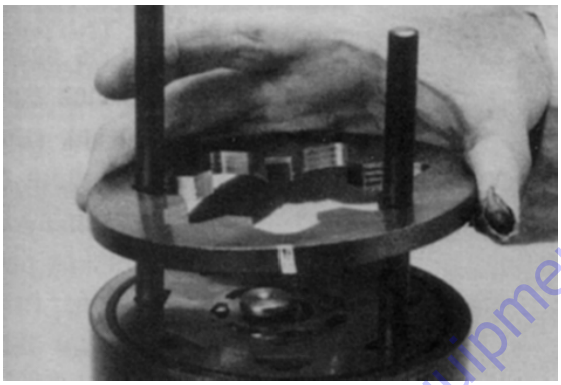

18. Assemble a new seal ring (3) flat side up, into commutator (5) and assemble commutator over the end of drive link (10) onto manifold (7) with seal ring side up.

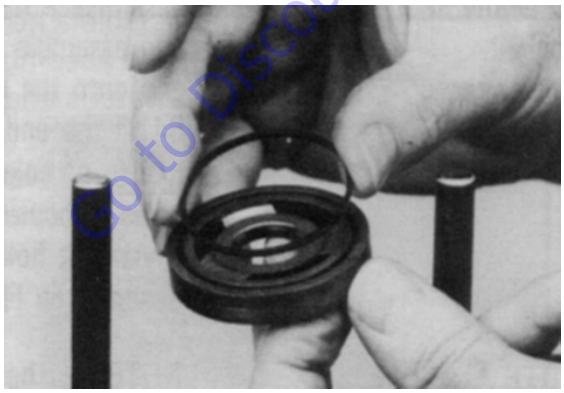

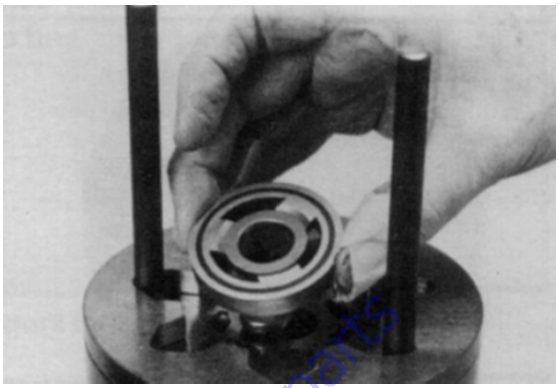

19. If shuttle valve components items #21, were removed from the end cover (2) turn a plug (21), loosely into one end of the valve cavity in the end cover. A 3/16 in. Allen wrench is required.

20. Assemble a new seal ring (4) into end cover (2) and assemble end cover over the alignment studs and onto the commutator set. If the end cover has only 5 bolt holes be sure the cover holes are aligned with the 5 threaded holes in housing (18).The correct 5 bolt end cover bolt hole relationship to housing port bosses.

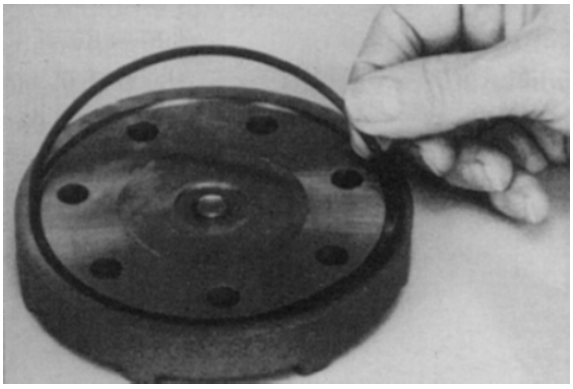

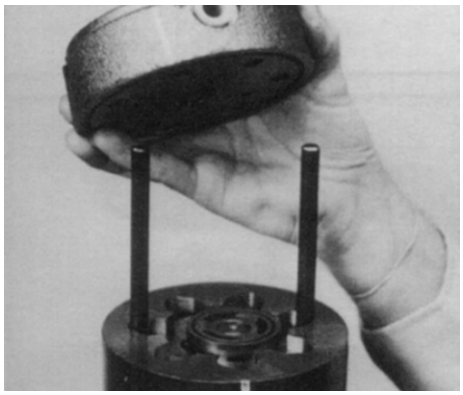

Go to Discount Equipment.com to order your parts

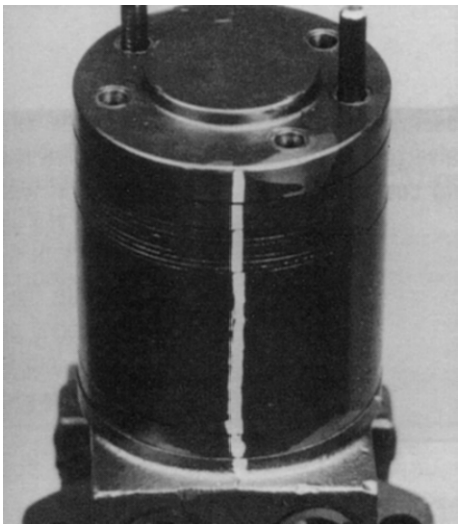

NOTE: *If the end cover has a valve (24) or has five bolt holes, use the line you previously scribed on the cover to radially align the end cover into its original position.*

21. Assemble the 5 or 7 special bolts (1) and screw in finger tight. Remove and replace the two alignment studs with bolts after the other bolts are in place. Alternately and progressively tighten the bolts to pull the end cover and other components into place with a final torque of 22-26 ft. lbs. 45-55 ft. lbs. (61-75 N m) for the seven 3/8-24 threaded bolts.

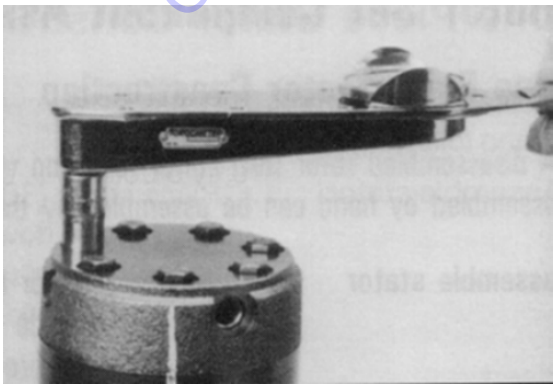

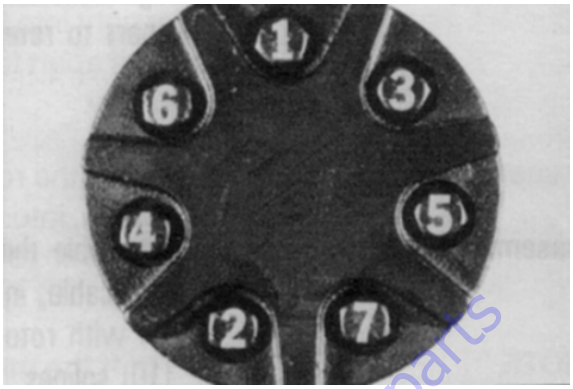

NOTE: *The special bolts required for use with the relief or shuttle valve (24) end cover assembly (2) are longer than the bolts required with standard and cover assembly. Refer to the individual service parts lists or parts list charts for correct service part number if replacement is required.*

22. Torque the two shuttle valve plug assemblies (21) in end cover assembly to 9-12 ft. lbs. (12-16 Nm) if cover is so equipped.

Torque the two relief valve plug assemblies (21) in end cover assembly to 45-55 ft. lbs. (61-75 Nm) if cover is so equipped.

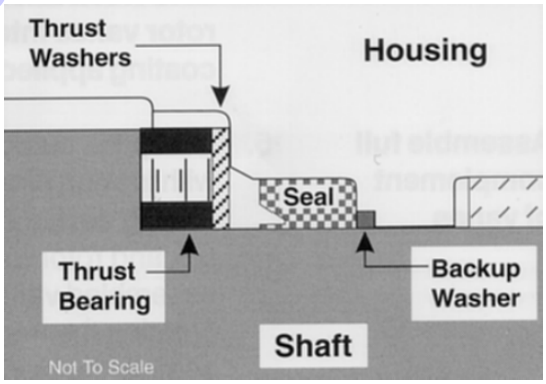

Go to Discount-Equipment.com to order your parts

One Piece Stator Construction

A disassembled rotor (8A) stator (8B) and vanes (8C) that cannot be readily assembled by hand can be assembled by the following procedures.

1. Place stator (8B) onto wear plate (9) with seal ring (4) side down, after following Torqlink™ assembly procedures 1 through 13. Be sure the seal ring is in place.

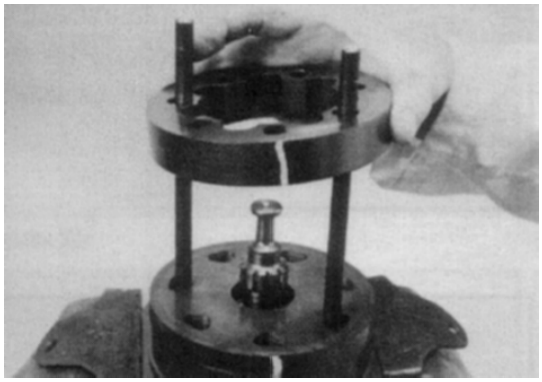

2. If assembly alignment studs are not being utilized, align stator bolt holes with wear plate and housing bolt holes and turn two bolts (1) finger tight into bolt holes approximately 180 degrees apart to retain stator and wear plate stationary.
3. Assemble the rotor (8A), counterbore down if applicable, into stator (8B), and onto wear plate (9) with rotor splines into mesh with drive link (10) splines.

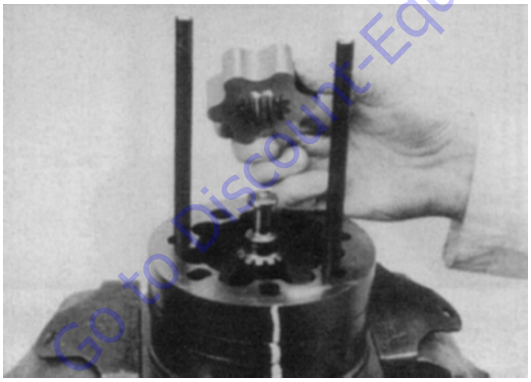

NOTE: *If the manifold side of the rotor was etched during Torqlink disassembly, this side should be up. If the rotor is not etched and does not have a counterbore, use the drive link spline contact pattern apparent on the rotor splines to determine the rotor side that must be against the wear plate.*

4. Assemble six vanes (8C), or as many vanes that will readily assemble into the stator vane pockets.

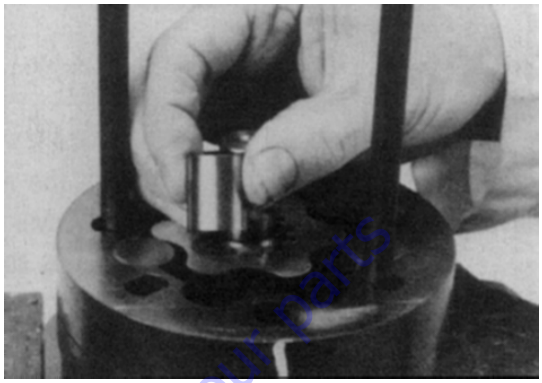

NOTICE

EXCESSIVE FORCE USED TO PUSH THE ROTOR VANES INTO PLACE COULD SHEAR OFF THE COATING APPLIED TO THE STATOR VANE POCKETS.

5. Grasp the output end of coupling shaft (12) with locking pliers or other appropriate turning device and rotate coupling shaft, drive link and rotor to seat the rotor and the assembled vanes (8C) into stator (8B), creating the necessary clearance to assemble the seventh or full complement of seven vanes. Assemble the seven vanes using minimum force.

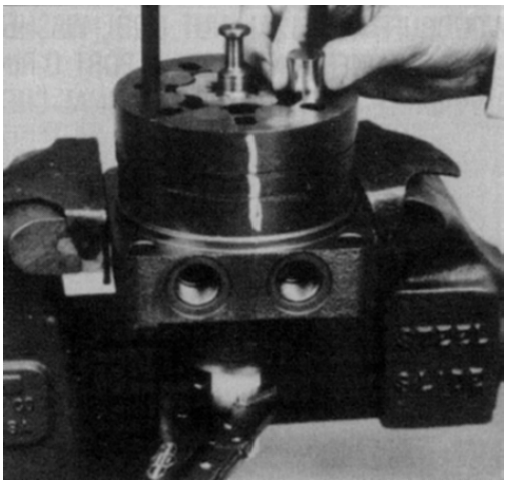

6. Remove the two assembled bolts (1) if used to retain stator and wear plate.

Go to Discount-Equipment.com to order your parts

3.17 SWING HUB (SN 0300134353 THROUGH 0300185827)

Roll, Leak and Brake Testing

Torque-Hub units should always be roll and leak tested before disassembly and after assembly to make sure that the unit's gears, bearings and seals are working properly. The following information briefly outlines what to look for when performing these tests.

NOTE: *The brake must be released before performing the roll test. This can be accomplished by either pressure testing using the Brake Leak Test procedure below or by tightening the 12 bolts into the piston through the end plate (See Brake Disassembly Procedure).*

NOTE: *Bolts must be removed while performing brake release test.*

Roll Test

The purpose of the roll test is to determine if the unit's gears are rotating freely and properly. You should be able to rotate the gears in your unit by applying constant force to the roll checker. If you feel more drag in the gears only at certain points, then the gears are not rolling freely and should be examined for improper installation or defects. Some gear packages roll with more difficulty than others. Do not be concerned if the gears in your unit seem to roll hard as long as they roll with consistency. Release the pressure at the Brake Housing (6) and remove the test fixtures.

Leak Test (Main Unit)

The purpose of a leak test is to make sure the unit is air tight. You can tell if your unit has a leak if the pressure gauge reading on your air checker starts to fall after the unit has been pressurized and allowed to equalize. Leaks will most likely occur at the pipe plugs, the main seal or wherever o-rings or gaskets are located. The exact location of a leak can usually be detected by brushing a soap and water solution around the main seal and where the o-rings or gaskets meet on the exterior of the unit, then checking for air bubbles. If a leak is detected in a seal, o-ring or gasket, the part must be replaced, and the unit rechecked. Leak test at 10 psi (0.7 bar) for 20 minutes.

Brake Test

The brake test must be performed with the Motor removed and the Brake Test Plate (T-214404) installed. Install the Hex Bolts through Brake Test Plate and torque to 80 - 100 ft. lbs. (108-135 Nm). Install Roll Checking Tool (T-212731) and apply 210 psi (14 bar) to the o-ring port in the side of the Brake Housing. The roll checking fixture should roll freely. Increase the pressure to 3000 psi (207 bar) and perform the Roll Test.

NOTE: *Failure to perform this lest may result in damaged or ineffective brake parts.*

Tightening and Torquing Bolts

If an air impact wrench is used to tighten bolts, extreme care should be taken to ensure that the bolts are not tightened beyond their specified torque.

The following steps describe how to tighten and torque bolts or socket head capscrews in a bolt circle.

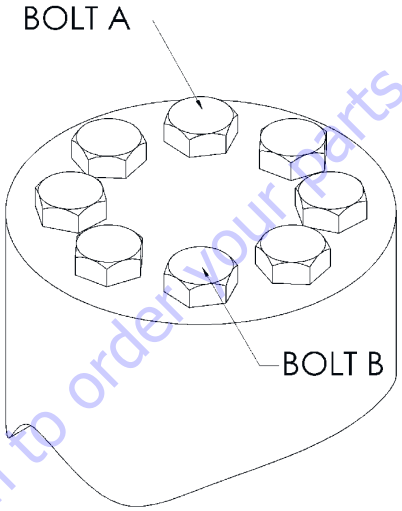

1. Tighten (but do not torque) bolt “A" until snug.
2. Go to the opposite side of the bolt circle and tighten bolt “B” until equally snug.
3. Crisscross around the bolt circle and tighten remaining bolts.
4. Now use a torque wrench to apply the specified torque to bolt “A”.
5. Using the same sequence, crisscross around the bolt circle and apply an equal torque to the remaining bolts.

GO Discount-Equipment.com to order your parts

Motor Control Valve Disassembly

NOTE: *Refer to Figure 3-48.*

1. Place unit on bench with the motor end up.
2. Remove O-ring Plug (1P) and drain the oil from the gearbox.
3. Remove Hydraulic Tubing Assembly (35) by loosening fittings on both ends of tube with a wrench.
4. Using a wrench, loosen jam nuts on Elbow Fittings (30) and remove fittings from Brake (6) and Motor Control Valve (32).
5. Remove O-ring Plugs (23) from Motor Control Valve (32).
6. Remove Motor Control Valve (32) from Motor (31) by removing the four Bolts (21) and washers (22).

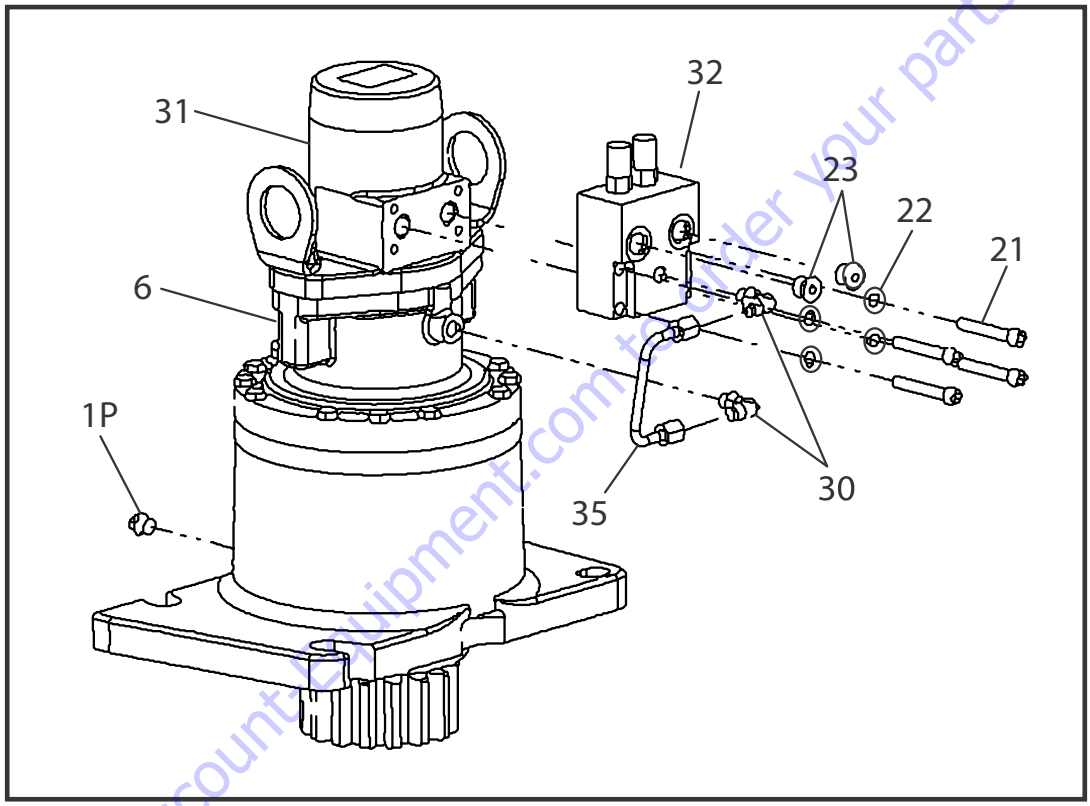

1P. O-ring Plug
6. Hydraulic Brake
21. Hex Bolt
22. Lockwasher
23. Plug
30. Elbow Fitting
31. Hydraulic Motor
32. Motor Control Valve
35. Hydraulic Tubing

Figure 3-48. Motor Control Valve

Go to Discount-Equipment.com to order your parts

Motor and Brake Disassembly

NOTE: *Refer to Figure 3-49.*

1. With unit resting on bench with Motor (31) end up, loosen Hex Bolts (29) and remove Lift Lugs (28) from the Motor (31).
2. Pull Motor (31) straight up and remove Motor (31) from Brake Housing (6).
3. Remove O-ring (26) from between Motor (31) and Brake Housing (6).
4. Remove the Springs (8L) from the piston.
5. Apply less than 50 psi (3.45 bar) air to the "brake port" to remove Brake Piston (8A).

⚠ CAUTION

THE PISTON MAY MOVE QUICKLY. EYE PROTECTION SHOULD BE WORN DURING THIS PROCEDURE.

6. Remove Rotors (8J) and Stators (8K) from Brake Housing (6).

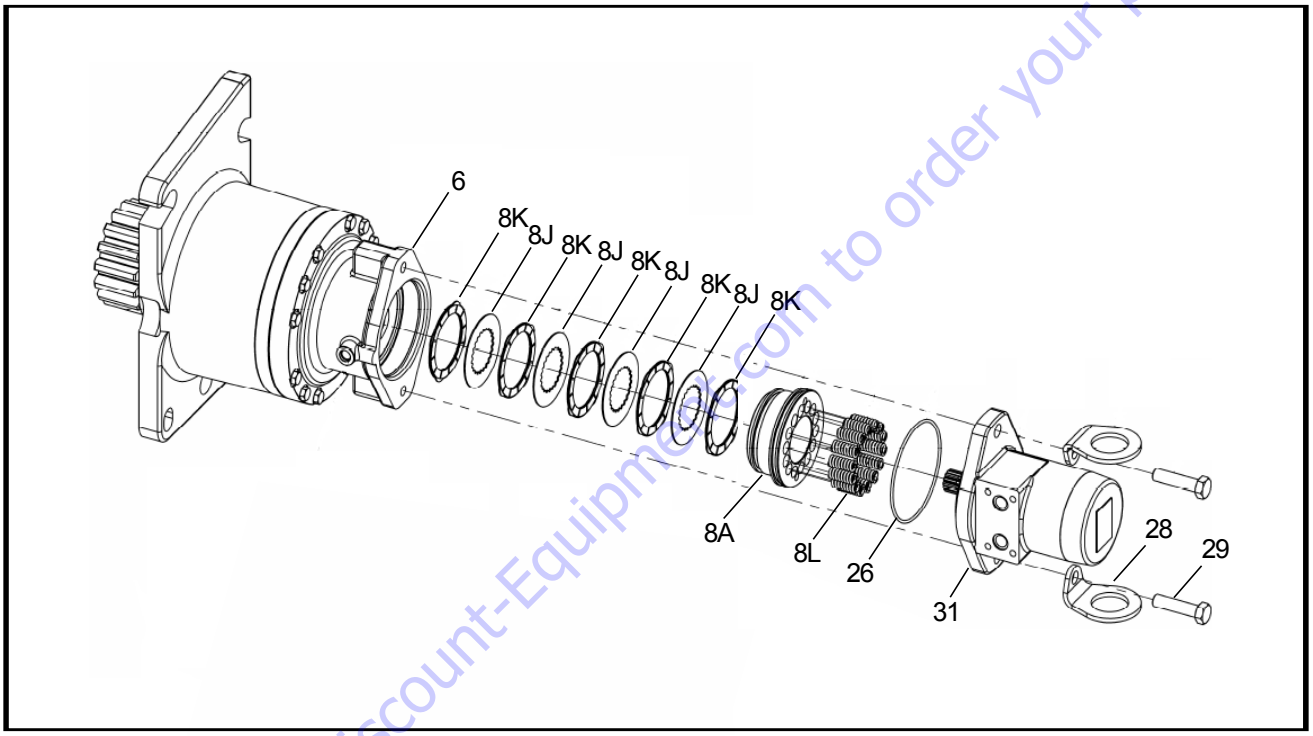

6. Brake Housing
8A. Brake Piston
8L. Spring
8J. Rotors
8K. Stator
26. O-ring
28. Lift Lug
29. Hex Bolt
31. Motor

Figure 3-49. Motor and Brake

Go to Discount-Equipment.com to order your parts

Main Drive Disassembly

NOTE: *Refer to Figure 3-50.*

1. Remove Sun Gear (8) with Retaining Ring (44) inside.
2. With the unit resting on the Output Shaft (Pinion) (1A), remove the Bolts (12) from the Brake Housing (6).
3. Remove the Brake Housing (6) from the main assembly.
4. Remove O-ring (5A) from between Brake Housing (6) and Ring Gear (4).
5. Remove Thrust Washer (11) from between Brake Housing (6) and Carrier Subassembly.
6. Remove Ring Gear (4) from Housing (1G).
7. Remove O-ring (5) from between Ring Gear (4) and Housing (1G).
8. Remove Carrier Sub-Assembly.
9. Remove Thrust Washer (11) from between Carrier Sub-Assembly and Internal Gear (2).
10. Remove Internal Gear (2).

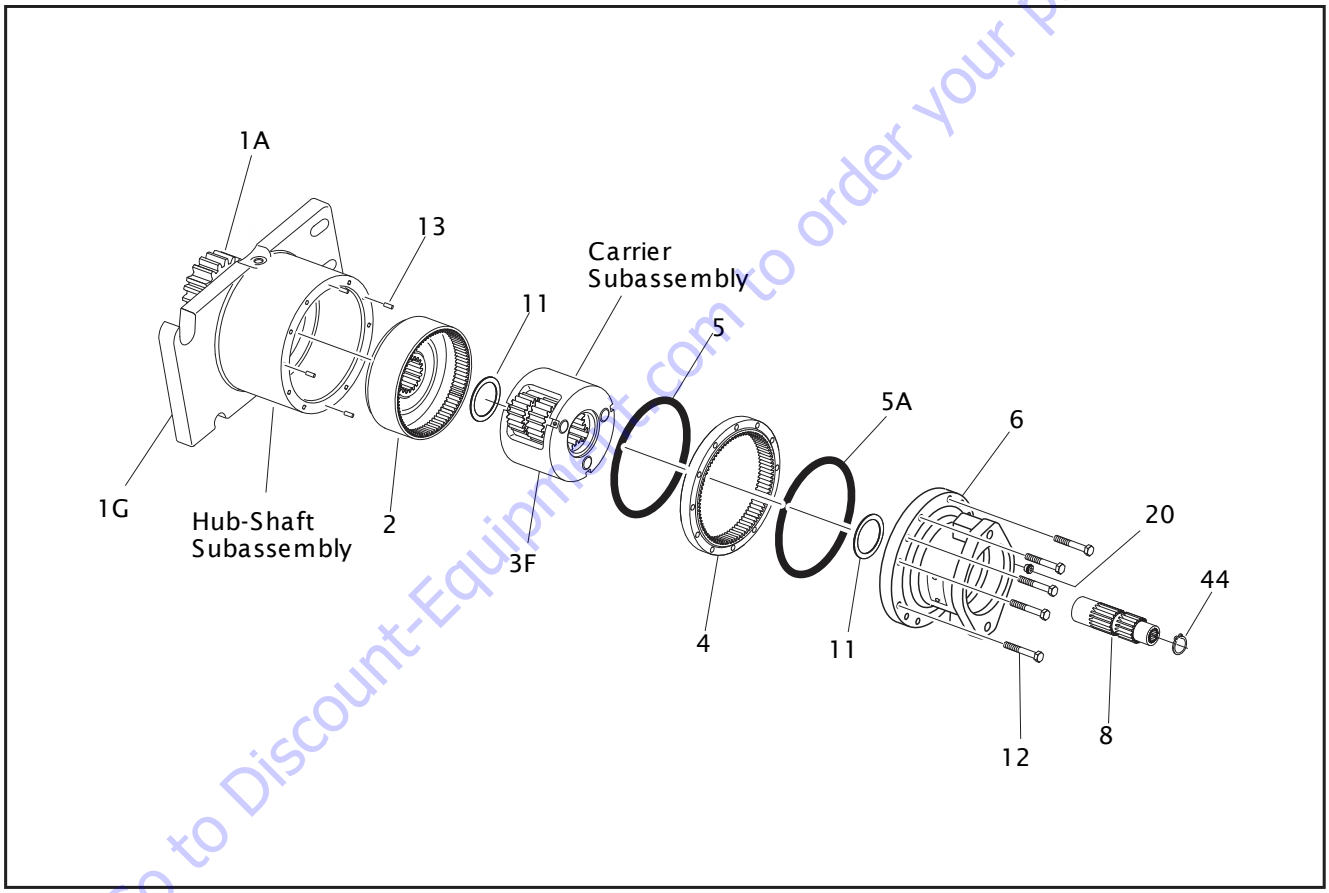

Go to Discount-Equipment.com to order your parts

1A. Output Shaft (Pinion)	5. O-ring	12. Bolt
1G. Housing	5A. O-ring	13. Dowel Pin
2. Internal Gear	6. Brake Housing	20. Pipe Plug
3F. Carrier subassembly	8. Sun Gear	44. Ring
4. Ring Gear	11. Thrust Washer	

Figure 3-50. Main Drive Assembly

Hub-Shaft Disassembly

NOTE: *Refer to Figure 3-51.*

1. Using retaining ring pliers remove Retaining Ring (1I) from groove in Output Shaft (1A) and discard.

⚠ CAUTION

EYE PROTECTION SHOULD BE WORN DURING THIS PROCEDURE.

2. Remove Thrust Washer (1H).
3. While supporting the Housing (1G) on the Output Shaft (1A) end, press the Output Shaft (1A) out of the Housing (1G).

NOTE: *The Lip Seal (1B) will be pressed out of the Housing (1G) by the Bearing Cone (1D) during this step.*

4. Remove the Bearing Cone (1E) from the Housing (1G).
5. Use a bearing puller to remove the Bearing Cone (1D) from the Shaft (1A).
6. Bearing Cups (1C & 1F) will remain in Housing (1G).

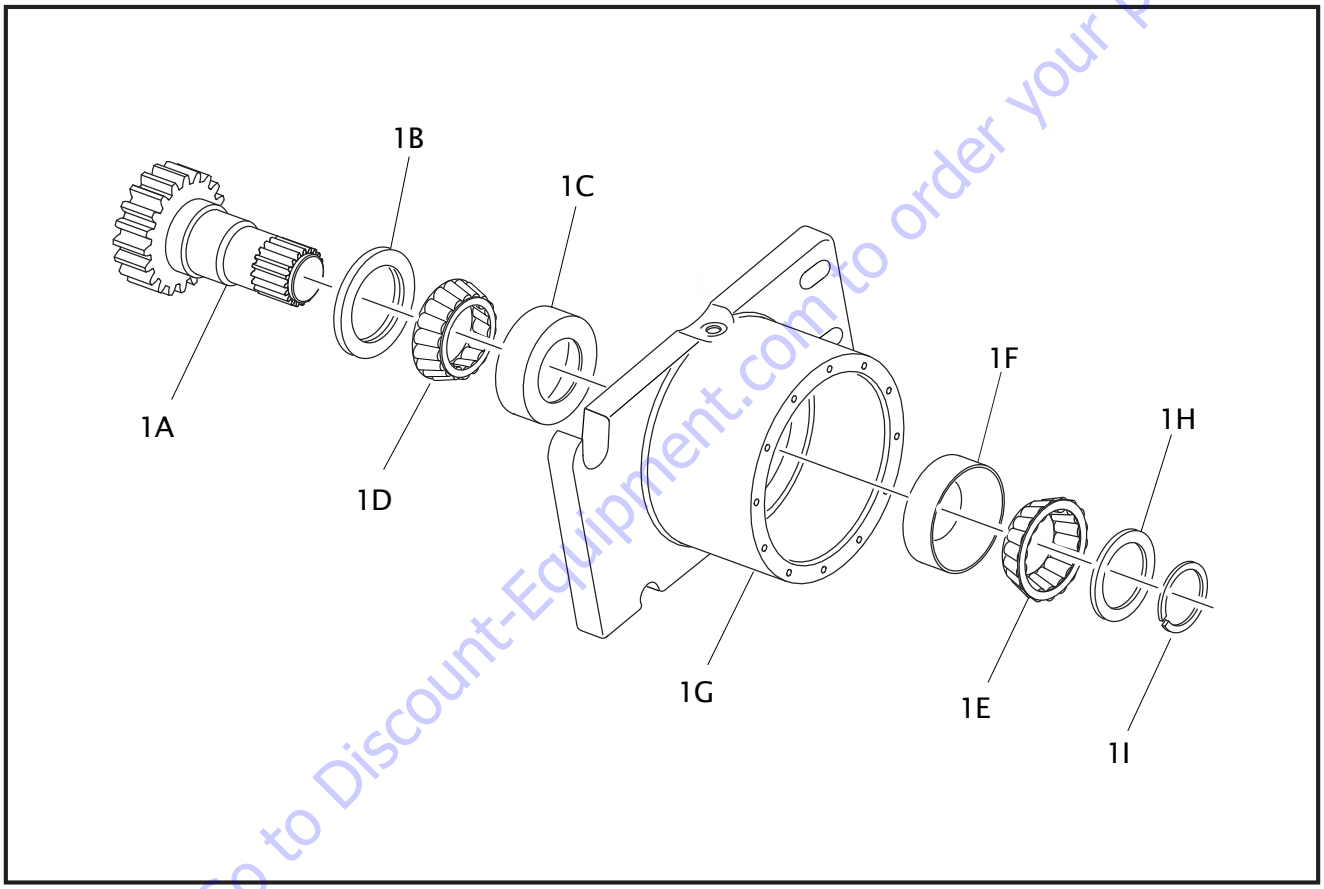

Go to Discount-Equipment.com to order your parts

1A. Output Shaft
1B. Lip Seal
1C. Bearing Cup
1D. Bearing Cone
1E. Bearing Cone
1F. Bearing Cup
1G. Housing
1H. Thrust Washer
1I. Retaining Ring

Figure 3-51. Hub-Shaft

Carrier Disassembly

NOTE: *Refer to Figure 3-52.*

1. Using a 3/16 in. punch drive the Roll Pin (3G) which holds the Planet Shaft (3E) in the Carrier (3A) down into the Planet Shaft (3E) until it bottoms.

NOTE: *Make sure that the Roll Pin has bottomed. Otherwise, damage to the carrier could occur when the Planet Shaft is removed.*

2. Remove the Planet Shaft (3E) from the Carrier (3A). Use a small punch to remove the Roll Pin (3D) from the Planet Shaft (3E).
3. Slide the Planet Gear (3F), the two Thrust Washers (3B) out of the Carrier (3A).
4. Remove both rows of Needle Bearings (3C) and the Spacer (3D) from the bore of the Planet Gear (3F).
5. Repeat Steps 1 through 4 for the remaining two Cluster Gears (3F).

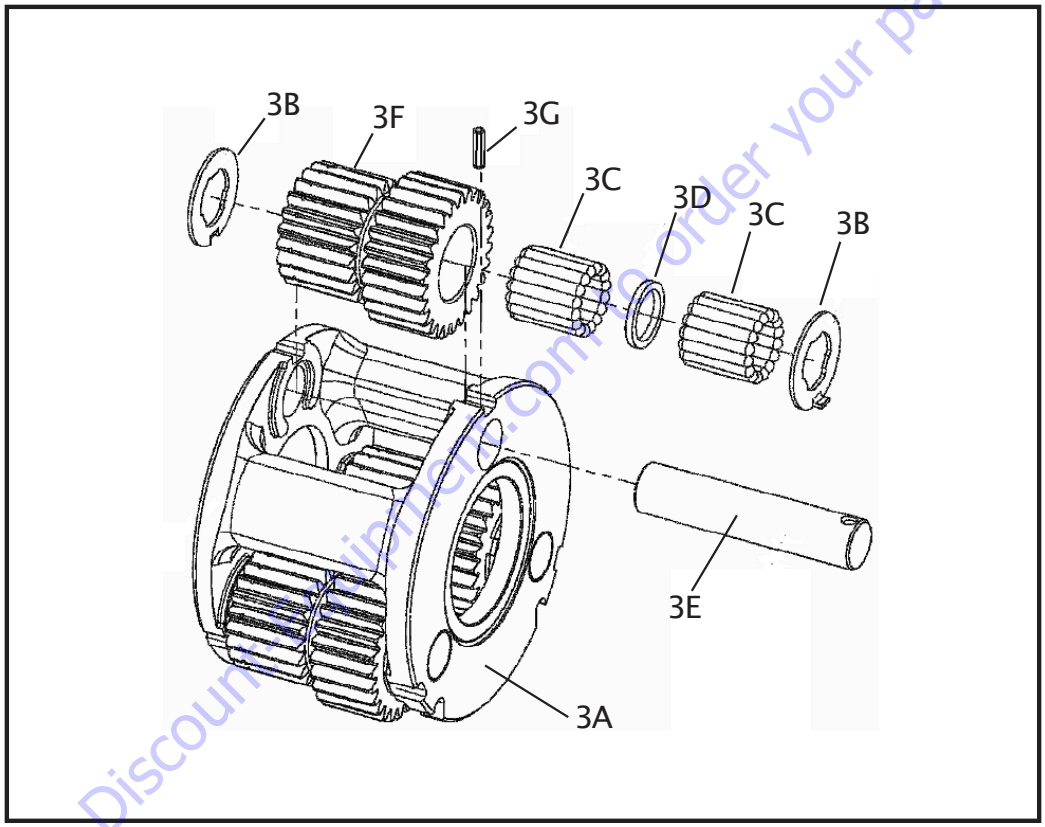

3A. Carrier
3B. Thrust Washers
3C. Needle Bearing
3D. Spacer
3E. Planet Shaft
3F. Cluster Gear
3G. Roll Pin

Figure 3-52. Carrier

Go to Discountmachinery.com to order your parts

Hub-Shaft Assembly

NOTE: *Refer to Figure 3-51.*

1. Press Bearing Cup (1C) into Housing (1G) taking care to insure cup starts square with the bore of Hub (1G).
2. Place Bearing Cone (1D) in Bearing Cup (1C) in Housing (1G).
3. Press or tap Seal (1B) Into the counterbore of Housing (1G) to the point where it becomes flush with the Housing (1G) face. Care should be taken to insure Seal (1B) is being correctly installed (smooth face up). Apply grease to the rubber portion of the seal bore.
4. Invert Hub (1G) and press Bearing Cup (1E) into counterbore of Housing (1G).
5. Carefully lower Housing (1G) onto the Output Shaft (1A) until Bearing Cone (1D) contacts the Output Shaft (1A).
6. Press on the small end of the Bearing Cone (1D), being careful not to contact the bearing cage, until the Bearing Cone (1D) seats on the shoulder of the Output Shaft (1A).
7. Start the Bearing Cone (1F) onto the Output Shaft (1A).
8. Press or tap the Bearing Cone (1F) onto the Output Shaft (1A) until it is just seated in the Bearing Cup (1E) while rotating the Housing (G).
9. Install Bearing Spacer (1H) onto Output Shaft (1A) and against Bearing Cone (1F).
10. Install Retaining Ring (1I) into the groove in the Output Shaft (1A). This Retaining Ring (1I) should never be reused in a repair or rebuild.

⚠ WARNING

EYE PROTECTION SHOULD BE WORN DURING THIS PROCEDURE.

11. Tap the Retaining Ring (1I) with a soft metal punch to ensure that the Retaining Ring (1I) is completely seated in the groove of the Output Shaft (IA).

⚠ WARNING

EYE PROTECTION SHOULD BE WORN DURING THIS PROCEDURE.

12. Install O-ring Plug (1P) and torque to 23 to 24 ft. lbs. (31 to 32 Nm).

Carrier Assembly

NOTE: *Refer to Figure 3-52.*

1. Apply a liberal Coat of grease to the bore of Cluster Gear (3F). This will enable the Needle Rollers (3C) to be held in place during assembly.
2. Install the first row of Needle Rollers (3C) into the bore of Cluster Gear (3F).
3. Insert Spacer (3D) into bore of Cluster Gear (3F) on top of the Needle Rollers (3C).
4. Place second row of Needle Rollers (3C) into bore of Cluster Gear (3F) against Spacer (3D).
5. Place Carrier (3A) so that one of the roll pin holes is straight up.
6. Start Planet Shaft (3E) through the hole in Carrier (3A). Using ample grease to hold it in position, slide one Thrust Washer (3B) over the Planet Shaft (3E) with the tang resting in the cast slot of the Carrier (3A).
7. With large end of Cluster Gear (3F) facing the roll pin hole in the Carrier, place the Cluster Gear into position in carrier (3A) and push Planet Shaft (3E) through the Cluster Gear (3F) without going all the way through.
8. Slide the second Thrust Washer (3B) between the Cluster Gear (3F) and the Carrier (3A) with the tang of the washer located in the cast slot of the Carrier (3A). Finish sliding the Planet Shaft (3E) through the Thrust Washer (3B) and into the Carrier (3A).
9. Position the non-chamfered side on the Planet Shaft (3E) roll pin hole so that it is in line with the hole in the Carrier (3A) using a 1/8 in. (3 mm) diameter punch.
10. After using a 3/16 in. (5 mm) punch to align the two roll pin holes. Drive the Roll Pin (3G) through Carrier (3A) and into the Planet Shaft (3E) until the Roll Pin (3G) is flush with the bottom of the cast slot in the Carrier (3A) outside diameter at the thrust washer (3B) tang. Use a 1/4 in. (6 mm) pin punch to make sure the Roll Pin (3G) is flush in the slot.
11. Repeat Steps 1 through 10 for the remaining two Cluster Gears (3F).

Go to Discount-Equipment.com to order your parts

Main Drive Assembly

NOTE: *Refer to Figure 3-50.*

1. With the Hub Shaft Sub-Assembly resting on the Shaft (1A) install Internal Gear (2). The spline of the Internal Gear (2) bore will mesh with the spline of the Output Shaft (1A). This will be a tight fit.
2. Inspect the location of the Internal Gear (2) on the Output Shaft (1A). The portion of the Output Shaft (1A) should protrude through the Internal Gear (2) bore.
3. Install 4 Dowel Pins (13) into counter bore holes in Hub (IG).
4. Install Thrust Washer (11) in counter bore of Carrier Sub-Assembly (Small Cluster-Gear end) Use grease to hold in place.
5. Place O-ring (5) into Hub counter-bore. Use grease to hold O-ring in place.

⚠ WARNING

BEWARE OF SHARP EDGES OF THE COUNTER BORE WHILE SEATING THIS ORING.

6. Place Carrier Sub-Assembly on bench with the large end of Cluster Gears (3F) facing up with one at the 12 o'clock position. Find the punch marked tooth on each gear at the large end and locate at 12 o'clock (straight up) from each planet pin. Marked tooth will be located just under the Carrier on upper two gears. Check the timing through the slots in the carrier (See Carrier Sub-Assembly).
7. With large shoulder side of Ring Gear (4) facing down, place Ring Gear (4) over (into mesh with) cluster gears (3F). Be sure that cluster gear timing marks (punch marks) remain in correct location during Ring Gear (4) installation. The side of the Ring Gear (4) with an "X" or punch mark stamped on it should be up.
8. While holding Ring Gear (4) and Cluster Gears (3F) in mesh, place small end of Cluster Gears (3F) into mesh with the Internal Gear (2). On the Ring Gear (4) locate the hole marked "X", or punch marked, over one of the marked counter-bored holes (Step 5) in Hub (1G). Check timing through the slots in the carrier. Rotate carrier in assembly to check for freedom of rotation.

NOTE: *If gears do not mesh easily or Carrier Assembly does not rotate freely, then remove the Carrier and Ring Gear and check the Cluster Gear timing.*

9. Install Thrust Washer (11) into the counter-bore on the face of the carrier. Use grease to hold in place.
10. Place O-ring (5A) into counter-bore or Brake Housing (6). Use grease to hold O-Ring in place.

⚠ CAUTION

BEWARE OF SHARP EDGES OF THE COUNTER-BORE WHILE SEATING THIS O-RING.

11. Install the Brake Housing (6), taking care to correctly align Pipe Plug (20) with those in the Hub (I G).
12. Install Bolts (12) through the Brake Housing (6) into the Hub (1G) and torque to 23-27 ft. lbs. (31-37 Nm).
13. With gearbox standing on the pinion end fill gearbox with 43 oz. of ISO VG150/VG220 gear Oil.
14. Install Retaining Ring (44) into the groove in the Sun Gear (8).
15. Install the Sun Gear (8) into mesh with the Planet Gears (3F).
16. Install Pipe Plug (20) into Cover (6) torque to 23 to 24 ft. lbs. (31-32 Nm).

Go to Discount-Equipment.com to order your parts

Motor and Brake Assembly

NOTE: *Refer to Figure 3-49.*

1. Alternate Stators (8K) (O.D. lobes) with Rotors (8J) (I.D. splines) into bore of Brake Housing (6). starting with a Stator (8K) and ending with a Stator (8K).
2. Grease the O-rings (8F) & (8D) and Backup rings (8H) & (8E). and place them in their respective grooves in the Brake Housing (6) and Piston (8A). Make sure the Backup rings are correctly positioned.
3. Apply grease sparingly to the Piston O.D. (8A) and the bore of the Brake Housing (6). Insert Piston (8A) into Brake Housing (6) be sure not to damage the O-rings.
4. Install Springs (8L) into the spring pockets of the Piston (8A).
5. Test the brake and perform the roll test. Remove the Brake Test Plate.
6. Install the O-ring (26) onto the pilot of the Motor (31), use grease to keep the O-ring in place.
7. Place Motor (31) into Brake pilot, and line up holes.
8. Assemble Lift Lugs (28) onto Hex Bolts (29). Assemble Hex Bolts (29) with Lift Lugs (28) through the Motor (31) and Brake (6) against Motor flange.
   Torque to 80-100 ft. lbs. (108-136 Nm).

Motor Control Valve Assembly

NOTE: *Refer to Figure 3-48.*

1. Lay assembly down with motor ports facing up. Remove the two plastic plugs in the motor ports, being careful not to lose the O-ring in each port. Assemble the Motor control Valve (32) onto the Motor (31) with Bolt (21) and Lock Washers (22). Torque Bolts (21) to 23-27 ft. lbs. (31-37 Nm).

NOTE: *Be sure to align the holes in the control valve with the motor ports.*

2. Install Elbow Fittings (30) into Brake (6). Do not tighten jam nuts.
3. Install Elbow Fittings (30) into Motor Control Valve (32). Do not tighten jam nuts.
4. Assemble Tube (35) into Elbow Fittings (30) and torque to 13-15 ft.lbs (18-20 Nm). Tighten the jam nuts on the Elbow Fittings (30) and torque to 13-15 ft. lbs. (18-20 Nm).
5. Install one O-ring Plug (23) into Motor Control Valve (32) and torque to 30-31 ft. lbs. (41-42 Nm).
6. Pressure test brake, tube and control valve connections by applying 3000 psi (207 bar) pressure to the open port in the Motor Control Valve (32) and holding for 1 minute. Check for leaks al the control-valve-motor interface and the tube connections. Release pressure and install the remaining O-ring Plug (23) into Motor Control Valve (32) and torque to 30-31 ft. lbs. (41-42 Nm).

Go to Discount-Equipment.com to order your parts

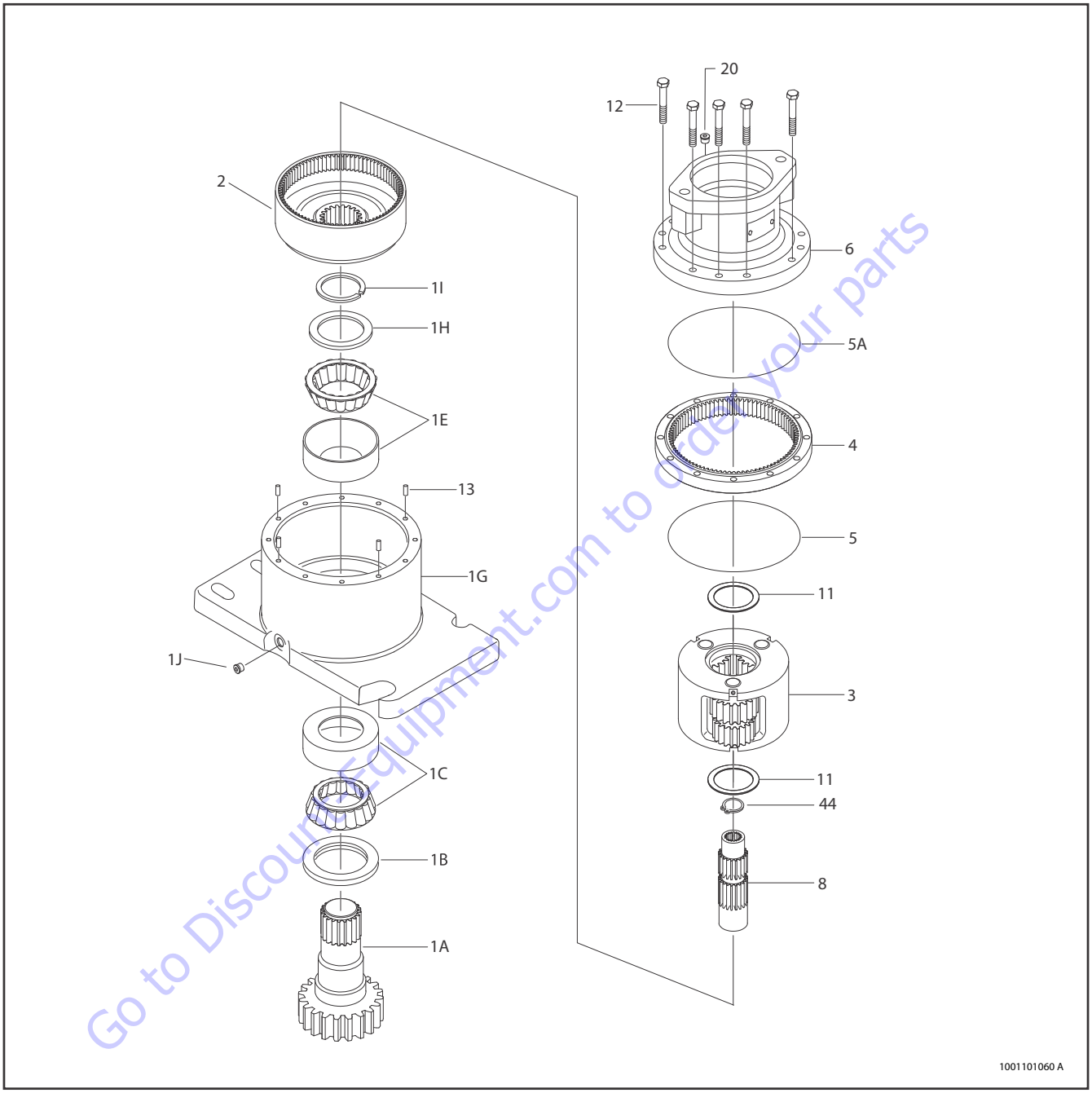

Go to Discount Equipment.com to order your parts

1A. Output Shaft
1B. Lip Seal
1C. Bearing
1D. Bearing
1G. Housing
1H. Thrust Washer
1I. Retaining Ring
1J. Pipe Plug
2. Internal Gear
3. Carrier Assembly
4. Ring Gear
5. O-Ring
5A. O-Ring
6. Brake Housing
8. Sun Gear
11. Thrust washer
12. Bolt
13. Dowel Pin
20. Pipe Plug
44. Internal Retaining Ring

Figure 3-53. Swing Drive Assembly (SN 0300134353 through 0300185827)

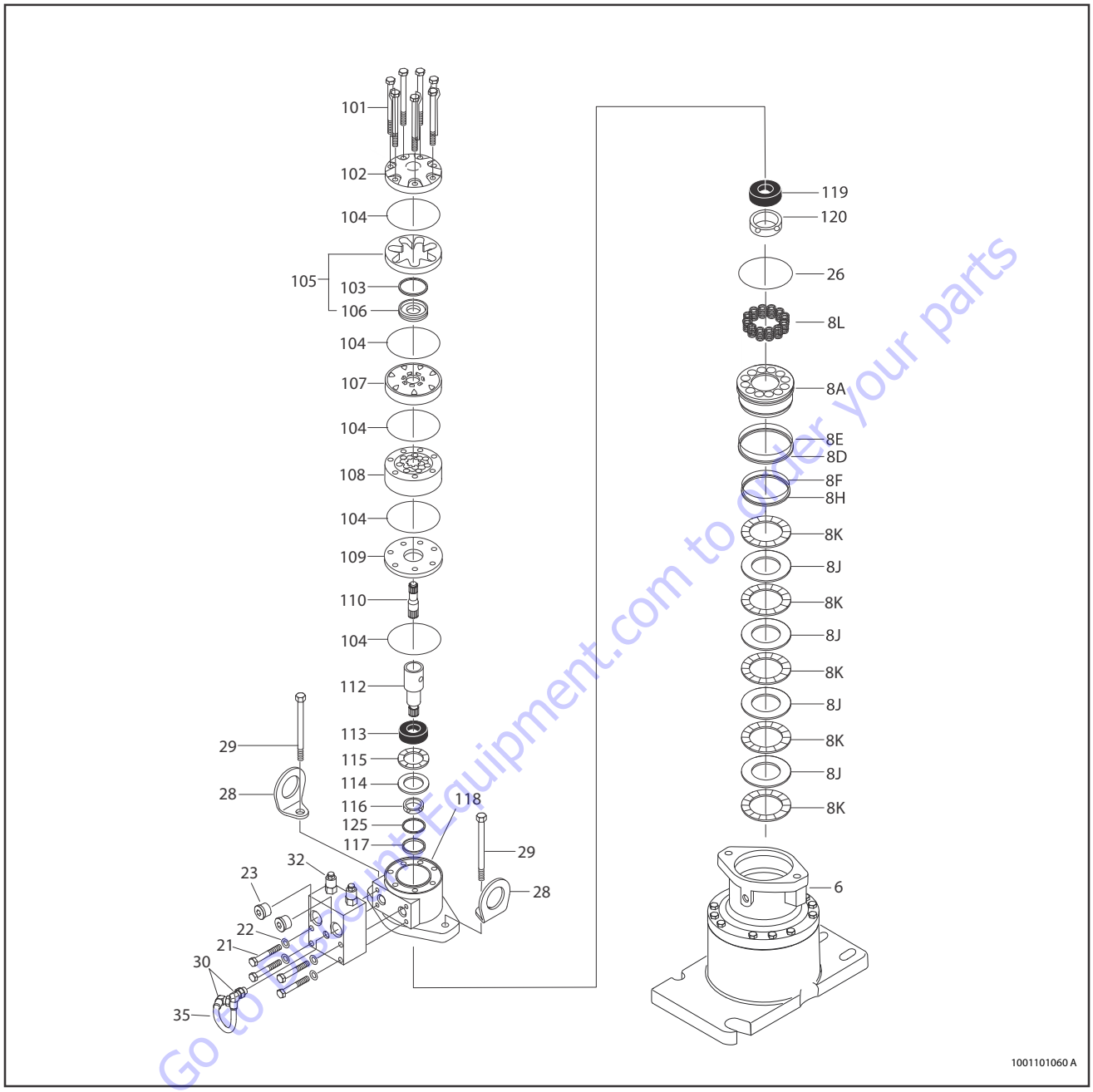

Go to Discount-Equipment.com to order your parts

6. Brake Housing
8A. Piston
8D. O-Ring
8E. Backup Ring
8F. O-Ring
8H. Backup Ring
8J. Rotor Disc
8K. Stator Disc
8L. Spring
21. Thrust Washer
22. Lock washer
23. Pipe Plug
26. O-Ring
28. Lifting lug
29. Bolt
30. Elbow
35. Tube
101. Bolt
102. End Cover
103. Commutator Seal
104. Ring Seal
105. Commutator and Ring Assy
106. Ring
107. Manifold
108. Rotor Set
109. Wear Plate
110. Drive Link
112. Coupling Shaft
113. Inner Bearing
114. Thrust Washer
115. Thrust Bearing
116. Inner Seal
117. Backup Washer
118. Housing
119. Outer Bearing
120. Seal
125. Backup Washer

Figure 3-54. Swing Motor and Brake Assembly (SN 0300134353 through 0300185827)

3.18 SWING MOTOR (SN 0300134353 THROUGH 0300185827)

Disassembly and Inspection

1. Place the Torqmotor™ in a soft jawed vice, with coupling shaft (12) pointed down and the vise jaws clamping firmly on the sides of the housing (18) mounting flange or port bosses. Remove manifold port O-Rings (18A) if applicable.

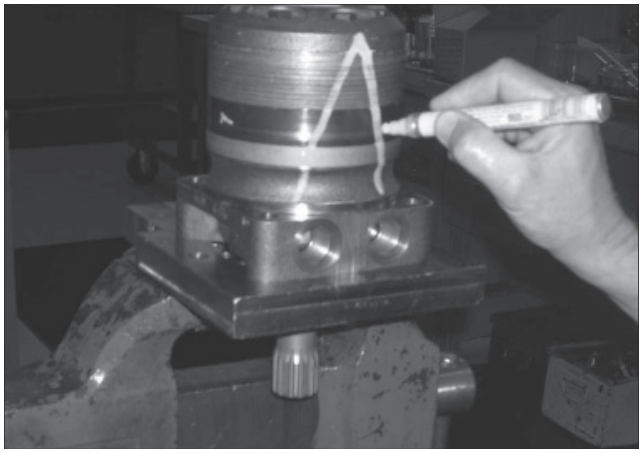

⚠ WARNING

IF THE TORQMOTOR™ IS NOT FIRMLY HELD IN THE VISE, IT COULD BE DISLODGED DURINGTHE SERVICE PROCEDURES, CAUSING INJURY.

2. Scribe an alignment mark down and across the Torqmotor™ components from end cover (2) to housing (18) to facilitate reassembly orientation where required. Loosen two shuttle or relief valve plugs (21) for disassembly later if included in end cover. 3/16 or 3/8 in. allen wrench or 1 in. hex socket required.

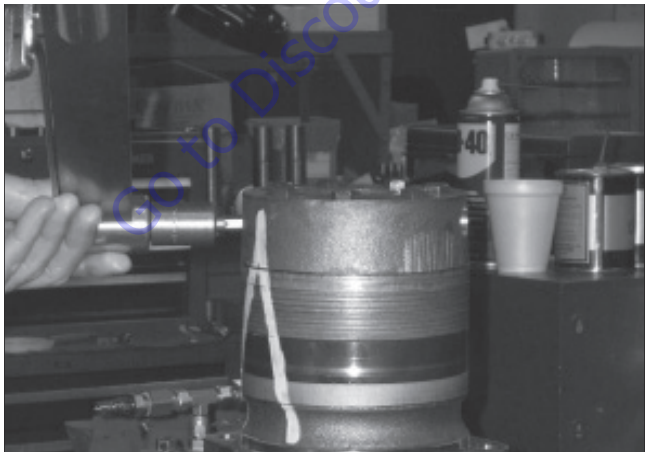

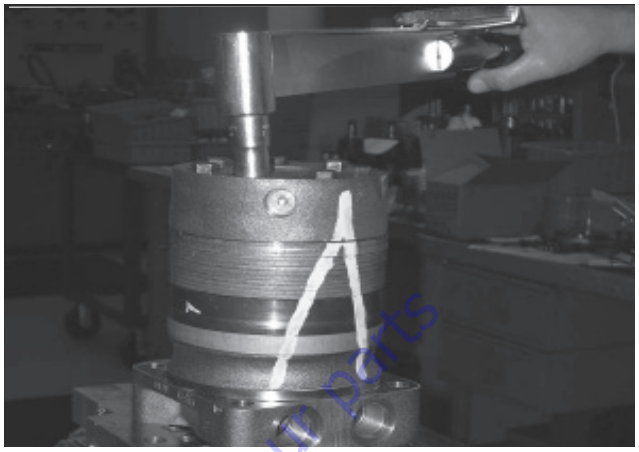

3. Remove the five, six, or seven special ring head bolts (1) using an appropriate 1/2 or 9/16 in. size socket. Inspect bolts for damaged threads, or sealing rings, under the bolt head. Replace damaged bolts.

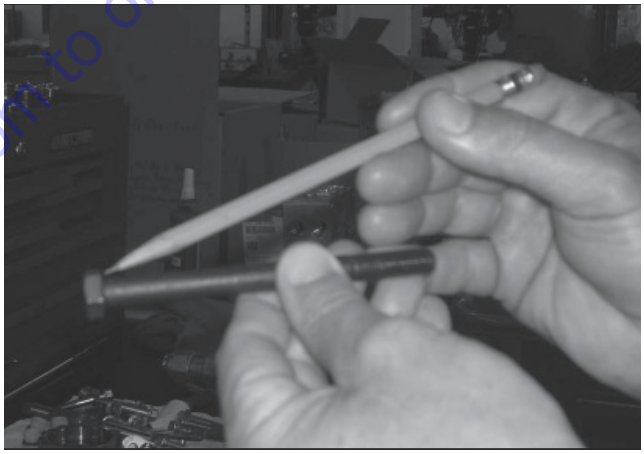

4. Remove end cover assembly (2) and seal ring (4). Discard seal ring.

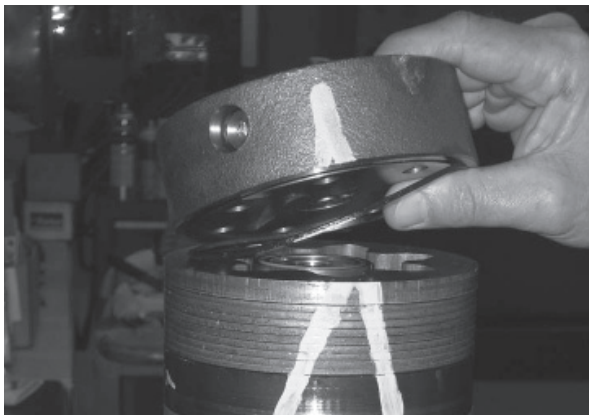

NOTE: *Refer to the appropriate "alternate cover construction" on the exploded view to determine the end cover construction being serviced.*

Go to Discount-Equipment.com to order your parts

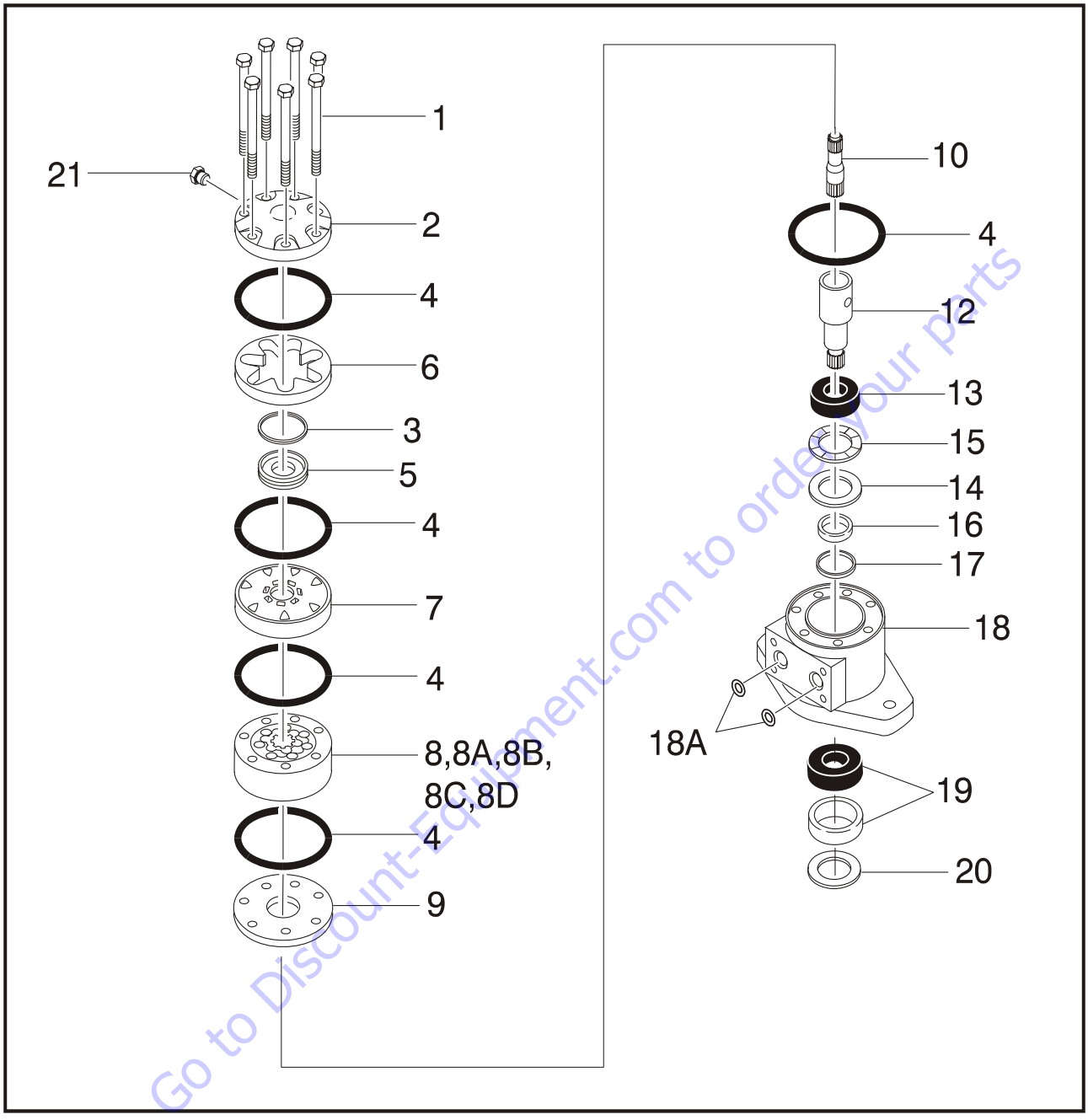

Go to Discount-Equipment.com to order your parts

1. Special Bolts
2. End Cover
3. Seal Ring-Commutator
4. Seal Ring
5. Commutator Ring
6. Commutator Ring
7. Manifold
8. Rotor Set
8A. Rotor
8B. Stator or Stator Vane
8D. Stator Half
9. Wear Plate
10. Drive Link
11. Not Used
12. Coupling Shaft
13. Bearing/Bushing, Inner
14. Thrust Washer
15. Thrust Bearing
16. Seal
17. Backup Washer
18. Housing
18A. O-Ring
19. Bearing/Bushing, Outer
20. Dirt & Water Seal
21. Plug

Figure 3-55. Swing Drive Motor (SN 0300134353 through 0300185827)

5. If the end cover (2) is equipped with shuttle valve components, remove the two previously loosened plugs (21).

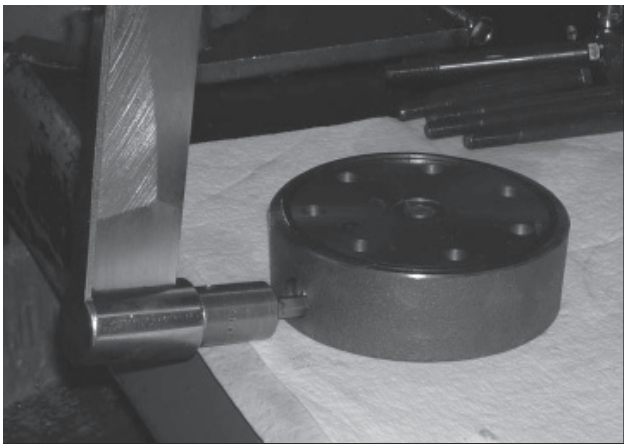

NOTICE

BE READY TO CATCH THE SHUTTLE VALVE OR RELIEF VALVE COMPONENTS THAT WILL FALL OUT OF THE END COVER VALVE CAVITY WHEN THE PLUGS ARE REMOVED.

NOTE: *O- ring is not included in seal kit but serviced separately, if required.*

NOTE: *The insert and if included the orifice plug in the end cover (2) must not be removed as they are serviced as an integral part of the end cover.*

6. Thoroughly wash end cover (2) in proper solvent and blow dry. Be sure the end cover valve apertures, including the internal orifice plug, are free of contamination. Inspect end cover for cracks and the bolt head recesses for good bolt head sealing surfaces. Replace end cover as necessary.

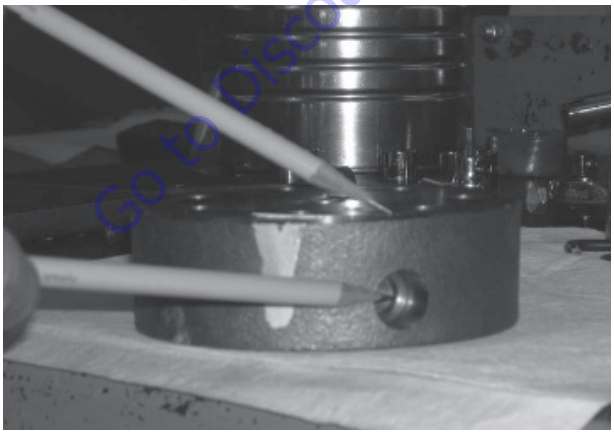

NOTE: *A polished pattern (not scratches) on the cover from rotation of the commutator (5) is normal. Discoloration would indicate excess fluid temperature, thermal shock, or excess speed and require system investigation for cause and close inspection of end cover, commutator, manifold, and rotor set.*

7. Remove commutator ring (6). Inspect commutator ring for cracks, or burrs.

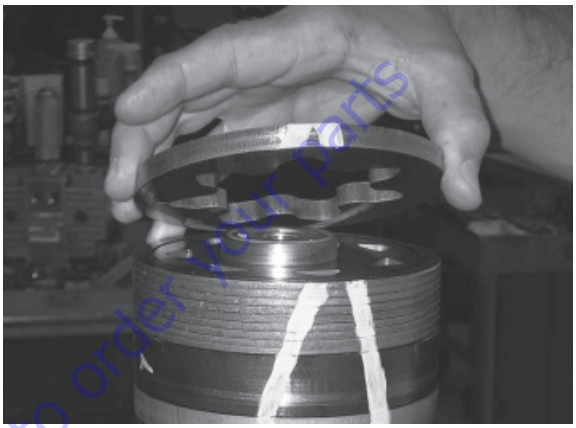

8. Remove commutator (5) and seal ring (3) Remove seal ring from commutator, using an air hose to blow air into ring groove until seal ring is lifted out and discard seal ring. Inspect commutator for cracks or burrs, wear, scoring, spalling or brinelling. If any of these conditions exist, replace commutator and commutator ring as a matched set.

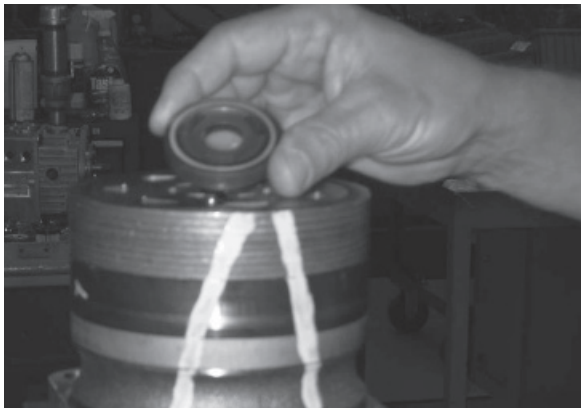

Go to Discount Equipment.com to order your parts

9. Remove manifold (7) and inspect for cracks surface scoring, brinelling or spalling. Replace manifold if any of these conditions exist. A polished pattern on the ground surface from commutator or rotor rotation is normal. Remove and discard the seal rings (4) that are on both sides of the manifold.

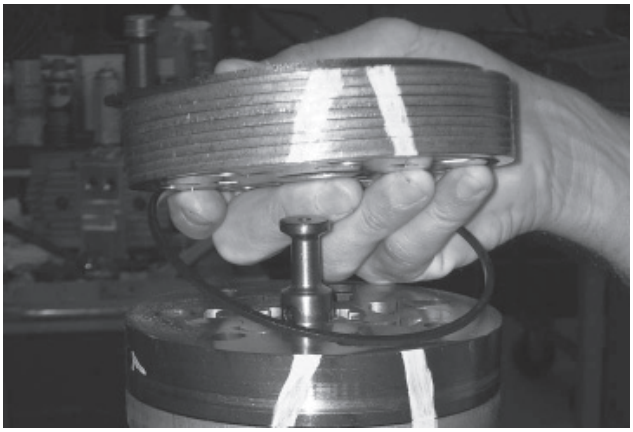

NOTE: *The manifold is constructed of plates bonded together to form an integral component not subject to further disassembly for service. Compare configuration of both sides oft hem an if old to ensure that same surface is reassembled against the rotor set.*

10. Remove rotor set (8) and warplane (9), together to retain the rotor set in its assembled form, maintaining the same rotor vane (8C) to stator (8B) contact surfaces. The drive link (10) may come away from the coupling shaft (12) with the rotor set, and wear plate.You may have to shift the rotor set on the warplane to work the drive link out of the rotor (8A) and warplane. Inspect the rotor set in its assembled form for nicks, scoring, or spalling on any surface and for broken or worn splines. If the rotor set component requires replacement, the complete rotor set must be replaced, it is a matched set. Inspect the warplane for cracks, brinelling, or scoring. Discard seal ring (4) that is between the rotor set and wear plate.

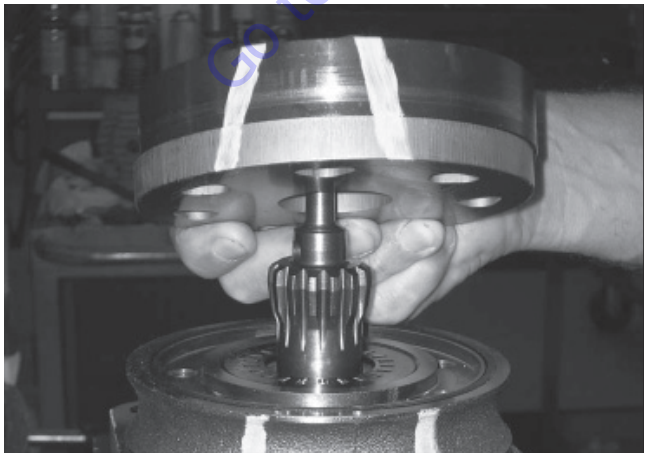

NOTE: *The rotor set (8) components may become disassembled during service procedures. Marking the surface of the rotor and stator that is facing UP, with etching ink or grease pencil before removal from Torqmotor™ will ensure correct reassembly of rotor into stator and rotor set into Torqmotor™. Marking all rotor components and mating spline components for exact repositioning at assembly will ensure maximum wear life and performance of rotor set and Torqmotor™.*

NOTE: *Series TG and TH may have a rotor set with two stator halves (8B & 8D) with a seal ring (4) between them and two sets of seven vanes (8C & 8E). Discard seal ring only if stator halves become disassembled during the service procedures.*

NOTE: *A polished pattern on the wear plate from rotor rotation is normal.*

11. Place rotor set (8) and wear plate (9) on a flat surface and center rotor (8A) in stator (8B) such that two rotor lobes (180 degrees apart) and a roller vane (8C) centerline are on the same stator centerline. Check the rotor lobe to roller vane clearance with a feeler gage at this common centerline. If there is more than 0.005 in. (0.13 mm) of clearance, replace rotor set.

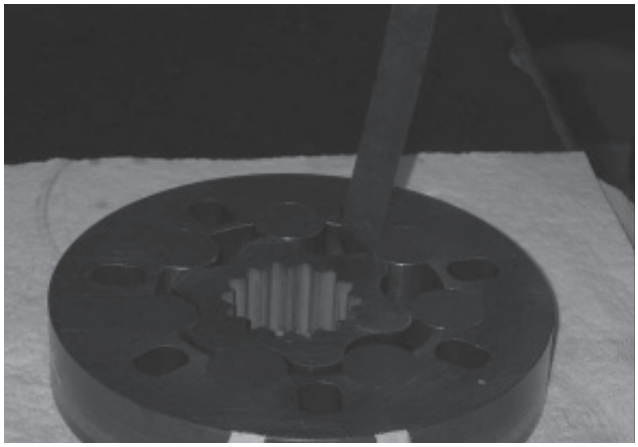

Go to Discount-Equipment.com to order your parts

NOTE: *If rotor set (8) has two stator halves (8B & 8D) and two sets of seven vanes (8C & 8E) as shown in the alternate construction TG rotor set assembly view, check the rotor lobe to roller vane clearance at both ends of rotor.*

12. Remove drive link (10) from coupling shaft (12) if it was not removed with rotor set and wear plate. Inspect drive link for cracks and worn or damaged splines. No perceptible lash (play) should be noted between mating spline parts. Remove and discard seal ring (4) from housing (18).

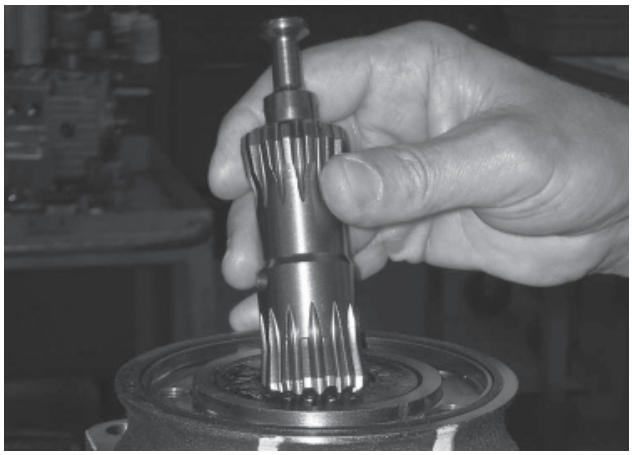

13. Remove thrust bearing (11) from top of coupling shaft (12). Inspect for wear, brinelling, corrosion and a full complement of retained rollers.

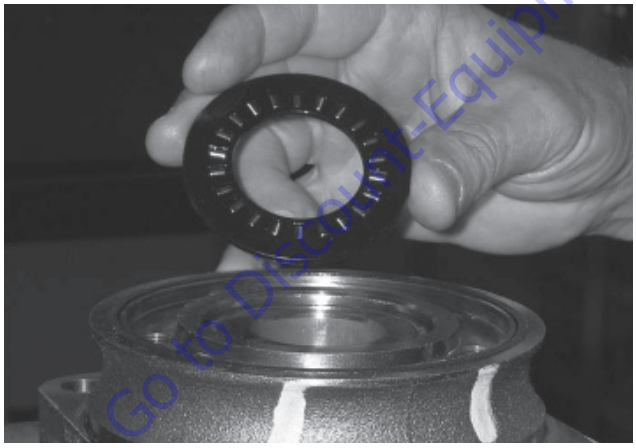

14. Check exposed portion of coupling shaft (12) to be sure you have removed all signs of rust and corrosion which might prevent its withdrawal through the seal and bearing. Crocus cloth or fine emery paper may be used. Remove any key (12A), nut (12B), washer (12C), bolt (12D), lock washer (12E), or retaining ring (12F).

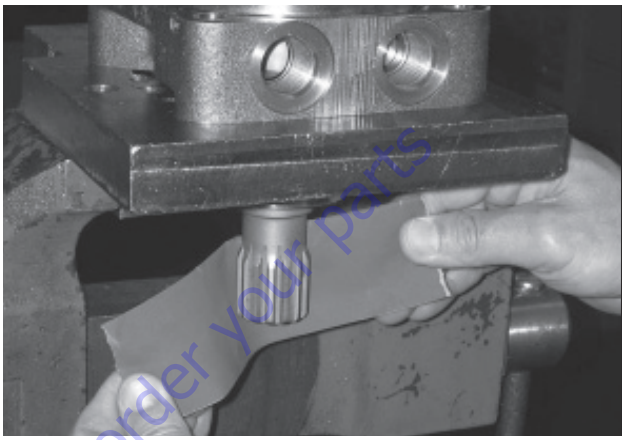

15. Remove coupling shaft (12), by pushing on the output end of shaft. Inspect coupling shaft bearing and seal surfaces for spalling, nicks, grooves, severe wear or corrosion and discoloration. Inspect for damaged or worn internal and external splines or keyway. Replace coupling shaft if any of these conditions exist.

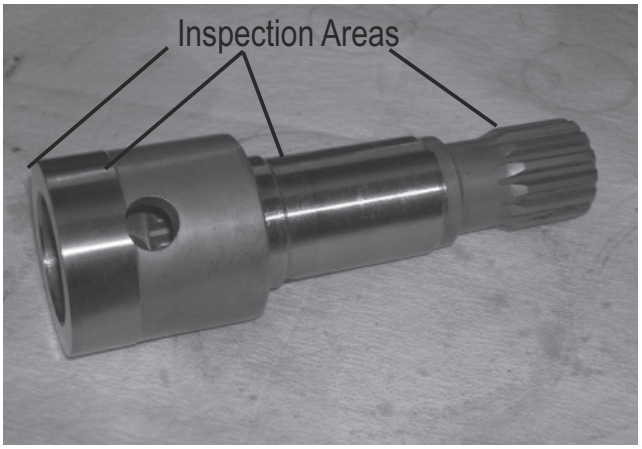

Go to Discount-Equipment.com to order your parts

NOTE: *Minor shaft wear in seal area is permissible. If wear exceeds 0.020 in. (0.51 mm) diametrically, replace coupling shaft.*

NOTE: *A slight "polish" is permissible in the shaft bearing areas. Anything more would require coupling shaft replacement.*

16. Remove and discard seal ring (4) from housing (18).

17. Remove thrust bearing (15) and thrust washer (14) Inspect for wear, brinelling, corrosion and a full complement of retained rollers.

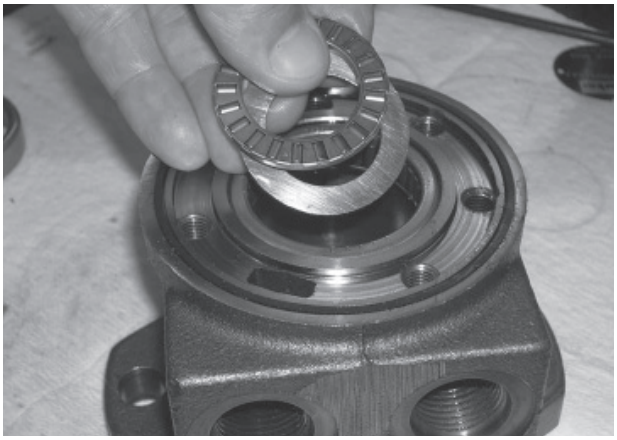

18. Remove seal (16) and back up washer (17) from Small Frame, housing (18). Discard both.

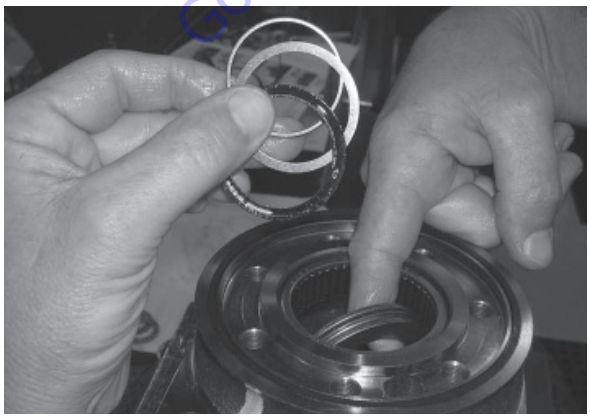

19. Remove housing (18) from vise, invert it and remove and discard seal

20. A blind hole bearing or seal puller is required.

21. Inspect housing (18) assembly for cracks, the machined surfaces for nicks, burrs, brinelling or corrosion. Remove

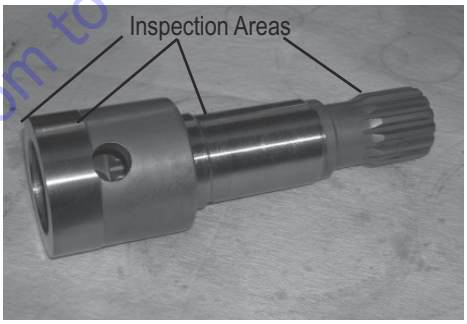

burrs that can be removed without changing dimensional characteristics. Inspect tapped holes for thread damage. If the housing is defective in these areas, discard the housing assembly.

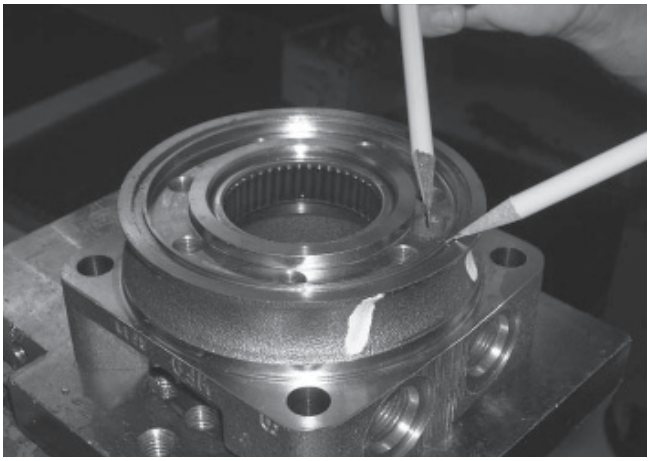

Go to Discount-Equipment.com to order your parts

22. If the housing (18) assembly has passed inspection to this point, inspect the housing bearings/bushings (19) and (13) and if they are captured in the housing cavity the two thrust washers (14) and thrust bearing (15). The bearing rollers must be firmly retained in the bearing cages, but must rotate and orbit freely. All rollers and thrust washers must be free of brinelling and corrosion. The bushing (19) or (13) to coupling shaft diameter clearance must not exceed 0.010 in. (0.025 mm). A bearing, bushing, or thrust washer that does not pass inspection must be replaced. If the housing has passed this inspection the disassembly of the Torqmotor™ is completed.

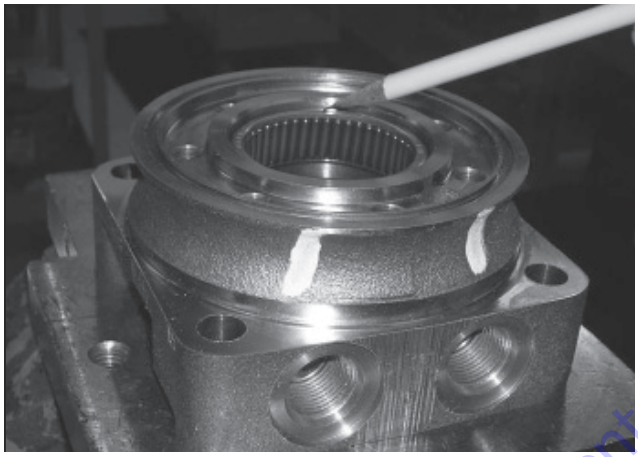

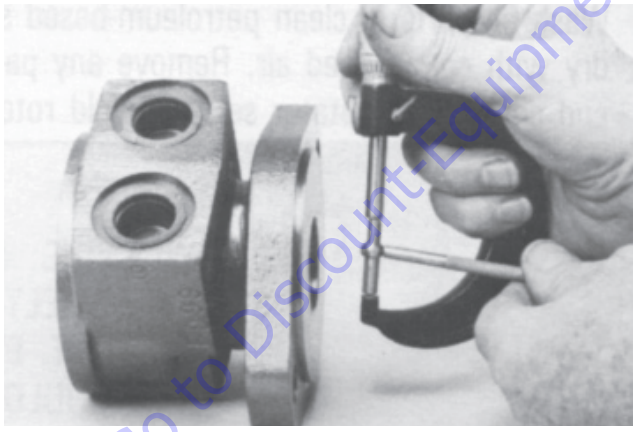

NOTE: *The depth or location of bearing/bushing (13) in relation to the housing wear plate surface and the depth or location of bearing/bushing (19) in relation to the beginning of bearing/bushing counter bore should be measured and noted before removing the bearings/ bushings. This will facilitate the correct reassembly of new bearings/bushings.*

23. If the bearings, bushing or thrust washers must be replaced use a suitable size bearing puller to remove bearing/bushings (19) and (13) from housing (18) without damaging the housing. Remove thrust washers (14) and thrust bearing (15) if they were previously retained in the housing by bearing (13).

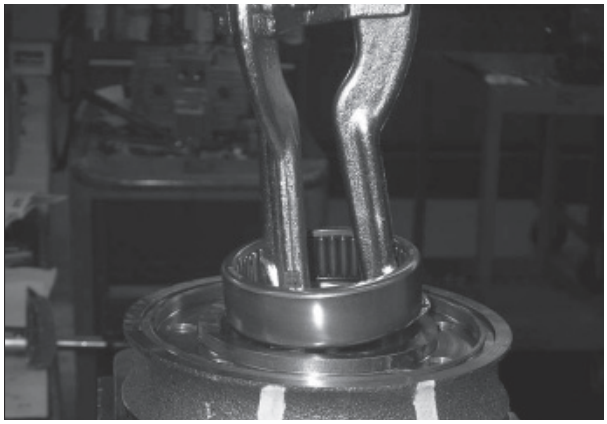

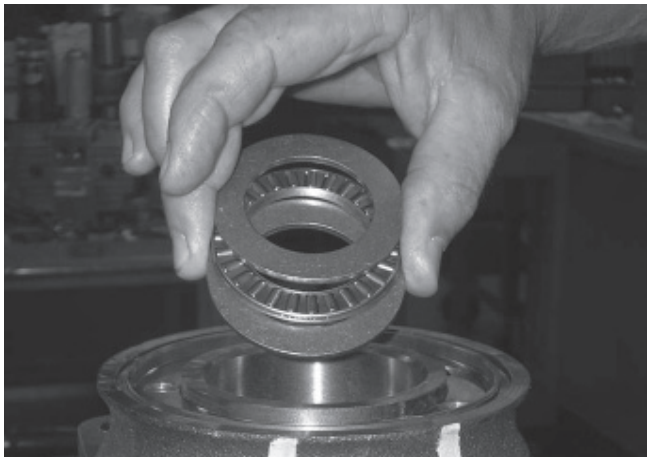

Go to Discount-Equipment.com to order your parts

Assembly

Replace all seals and seal rings with new ones each time you reassemble the Torqmotor™ unit. Lubricate all seals and seal rings with SAE 10W40 oil or clean grease before assembly.

NOTE: *Individual seals and seal rings as well as a complete seal kit are available. The parts should be available through most OEM parts distributors or Parker approved Torqmotor™ distributors. (Contact your local dealer for availability).*

NOTE: *Unless otherwise indicated, do not oil or grease parts before assembly.*

Wash all parts in clean petroleum-based solvents before assembly. Blow them dry with compressed air. Remove any paint chips from mating surfaces of the end cover, commutator set, manifold rotor set, wear plate and housing and from port and sealing areas.

⚠ DANGER

SINCE THEY ARE FLAMMABLE, BE EXTREMELY CAREFUL WHEN USING ANY SOLVENT. EVEN A SMALL EXPLOSION OR FIRE COULD CAUSE INJURY OR DEATH.

⚠ WARNING

WEAR EYE PROTECTION AND BE SURE TO COMPLY WITH OSHA OR OTHER MAXIMUM AIR PRESSURE REQUIREMENTS.

1. If the housing (18) bearing components were removed for replacement, thoroughly coat and pack a new outer bearing/bushing (19) with clean corrosion resistant grease recommended in the material section. Press the new bearing/bushing into the counterbore at the mounting flange end of the housing, using the appropriate sized bearing mandrel, which will control the bearing/ bushing depth.

   Torqmotor™ housings require the use of bearing mandrel to press bearing/ bushing (19) into the housing to a required depth of 0.151/0.161 in. (3.84/4.09 mm) from the end of the bearing counterbore.

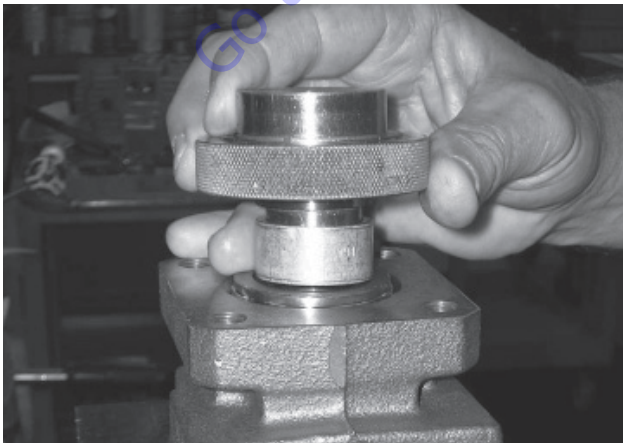

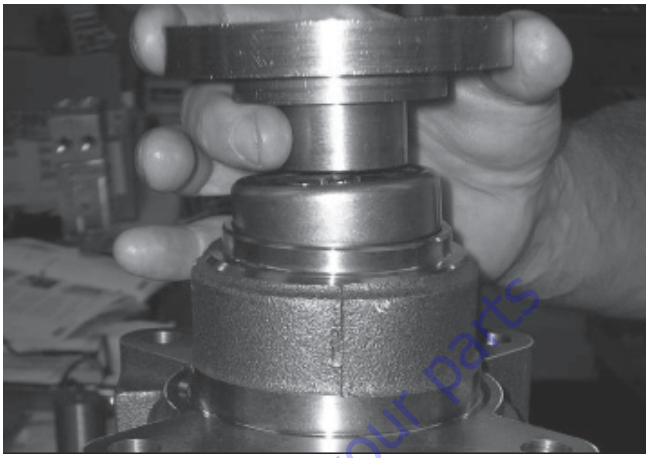

NOTE: *Bearing mandrel must be pressed against the lettered end of bearing shell. Take care that the housing bore is square with the press base and the bearing/bushing is not cocked when pressing a bearing/bushing into the housing.*

NOTICE

IF THE BEARING MANDREL SPECIFIED IN THE "TOOLS AND MATERIALS REQUIRED FOR SERVICING" SECTION IS NOT AVAILABLE AND ALTERNATE METHODS ARE USED TO PRESS IN BEARING/BUSHING (13) AND (19) THE BEARING/BUSHING DEPTHS SPECIFIED MUST BE ACHIEVED TO INSURE ADEQUATE BEARING SUPPORT AND CORRECT RELATIONSHIP TO ADJACENT COMPONENTS WHEN ASSEMBLED.

NOTICE

BECAUSE THE BEARING/BUSHINGS (13) AND (19) HAVE A PRESS FIT INTO THE HOUSING THEY MUST BE DISCARDED WHEN REMOVED. THEY MUST NOT BE REUSED.

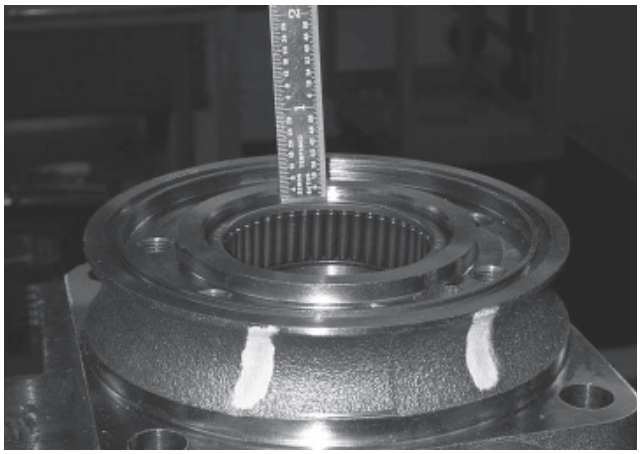

Go to Discount-Equipment.com to order your parts

2. The Torqmotor™ inner housing bearing/bushing (13) can now be pressed into its counterbore in housing (18) flush to 0.03 in. (0.76 mm) below the housing wear plate contact face. Use the opposite end of the bearing mandrel that was used to press in the outer bearing/ bushing (19).

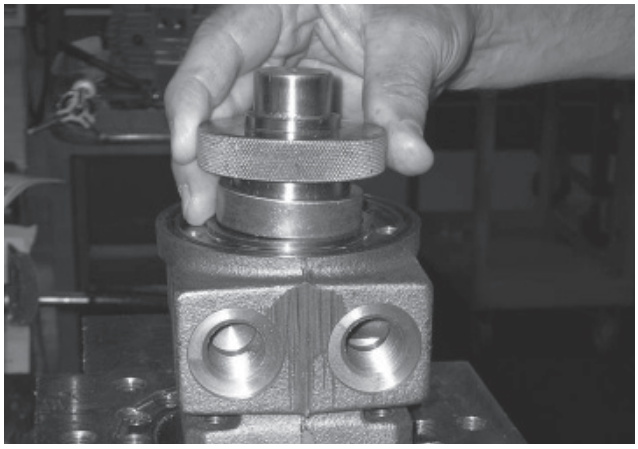

3. Press a new dirt and water seal (20) into the housing (18) outer bearing counterbore.

The Torqmotor™ dirt and water seal (20) must be pressed in until its flange is flush against the housing.

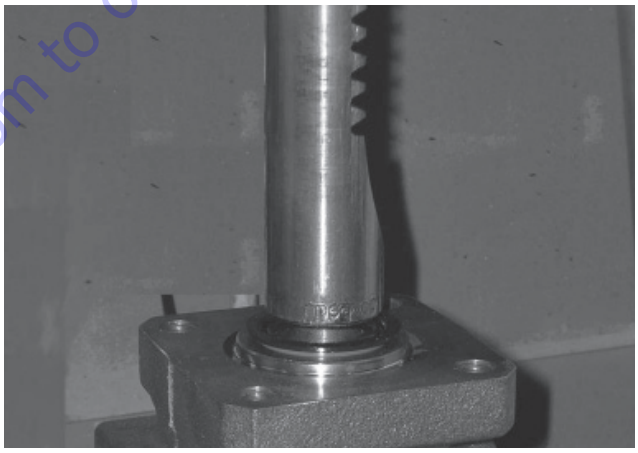

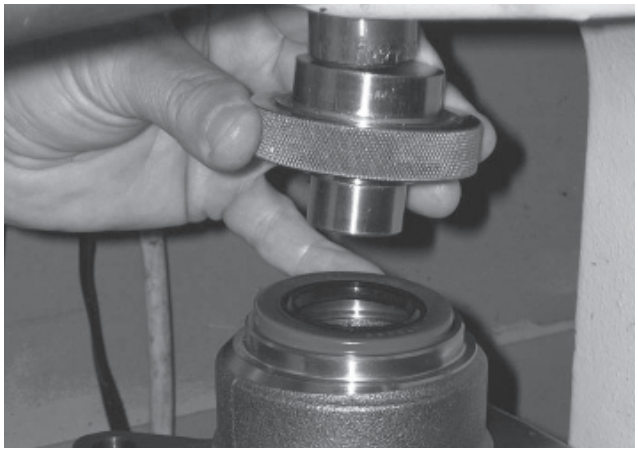

Go to Discount-Equipment.com to order your parts

4. Place housing (18) assembly into a soft jawed vise with the coupling shaft bore down, clamping against the mounting flange.

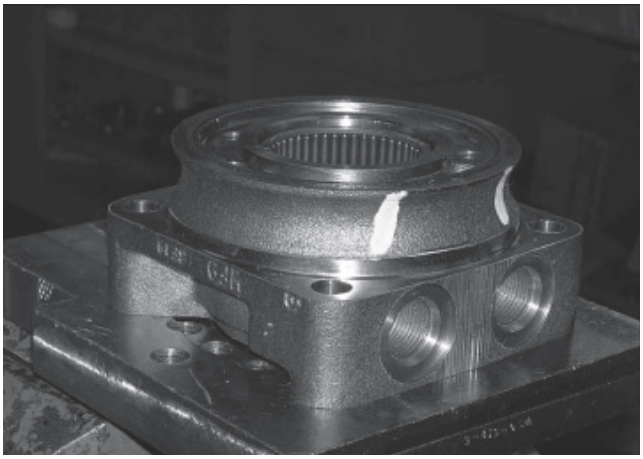

5. On the Torqmotor™ assemble a new backup washer (17) and new seal (16) with the seal lip facing toward the inside of Torqmotor™, into their respective counterbores in housing (18) if they were not assembled in procedure 2.

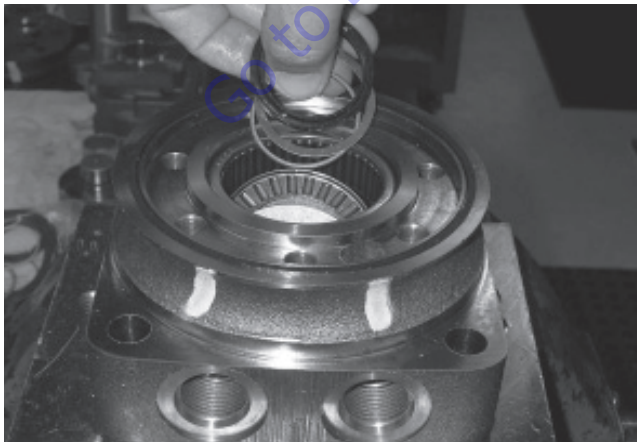

NOTICE

ORIGINAL DESIGN LARGE FRAME, TF & TG TORQMOTORS™ THAT DO NOT HAVE BACKUP WASHER (25) WHEN DISASSEMBLED MUST BE ASSEMBLED WITH A NEW BACKUP WASHER (17), NEW BACKUP WASHER (25), AND NEW SEAL (16).

6. Assemble thrust washer (14) then thrust bearing (15) that was removed from the Torqmotor™.

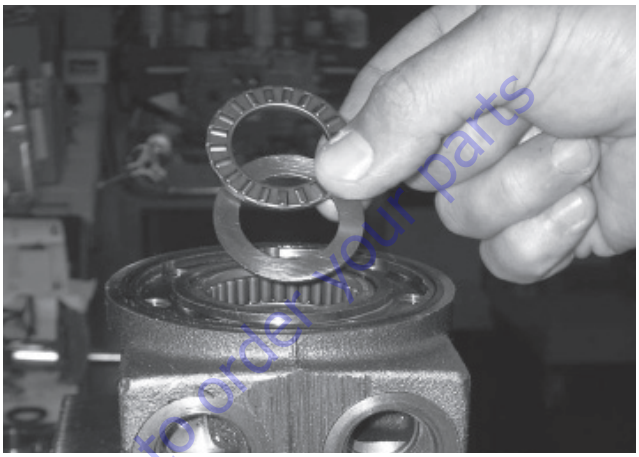

NOTE: *Torqmotors™ require one thrust washer (14) with thrust bearing (15).The coupling shaft will be seated directly against the thrust.*

7. Apply masking tape around splines or keyway on shaft (12) to prevent damage to seal.

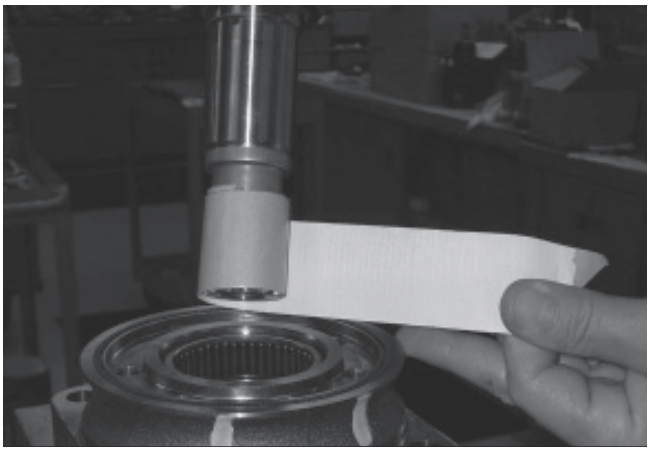

Go to Discount-Equipment.com to order your parts

8. Be sure that a generous amount of clean corrosion resistant grease has been applied to the lower (outer) housing bearing/bushing (19). Install the coupling shaft (12) into housing (18), seating it against the thrust bearing (15) in the housings.

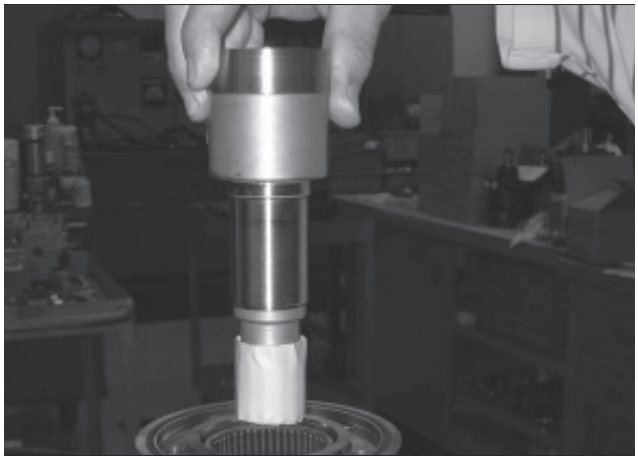

NOTICE

THE OUTER BEARING (19) IS NOT LUBRICATED BY THE SYSTEM'S HYDRAULIC FLUID. BE SURE IT IS THOROUGHLY PACKED WITH THE RECOMMENDED GREASE, PARKER GEAR GREASE SPECIFICATION #045236, E/M LUBRICANT #K-70M OR MOBIL MOBILITH SHC ® 460.

NOTE: *The coupling shaft (12) will be flush or just below the housing wear plate surface on Torqmotors™ when properly seated. The coupling shaft must rotate smoothly on the thrust bearing package.*

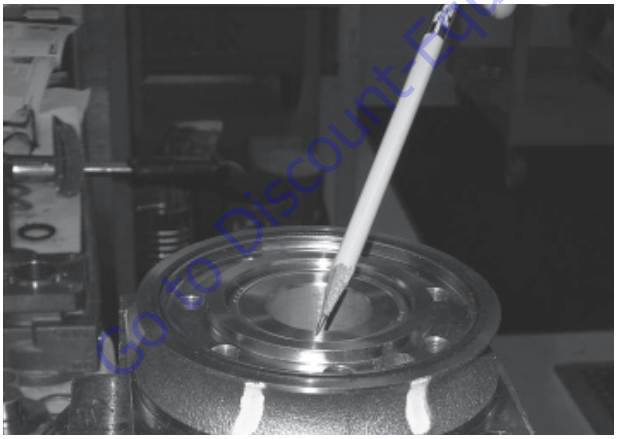

9. Apply a small amount of clean grease to a new seal ring (4) and insert it into the housing (18) seal ring groove.

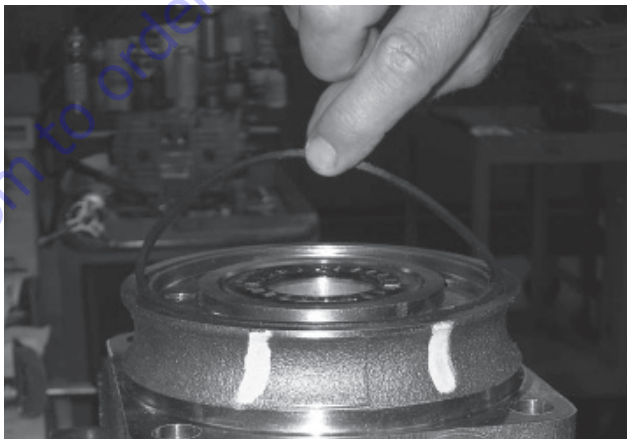

NOTE: *One or two alignment studs screwed finger tight into housing (18) bolt holes, approximately 180 degrees apart, will facilitate the assembly and alignment of components as required in the following procedures.The studs can be made by cutting off the heads of either 3/8-24 UNF 2A or 5/16-24 UNF 2A bolts as required that are over 0.5 in. (12.7 mm) longer than the bolts (1) used in the Torqmotor™.*

Go to Discount-Equipment.com to order your parts

10. Install drive link (10) the long splined end down into the coupling shaft (12) and engage the drive link splines into mesh with the coupling shaft splines.

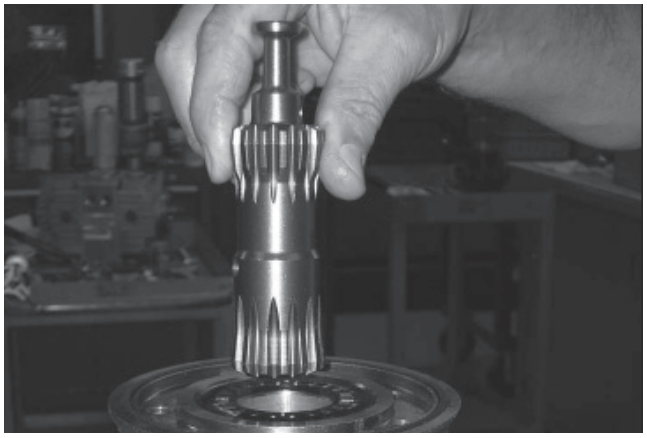

NOTE: *Use any alignment marks put on the coupling shaft and drive link before disassembly to assemble the drive link splines in their original position in the mating coupling shaft splines.*

11. Assemble wear plate (9) over the drive link (10) and alignment studs onto the housing (18).

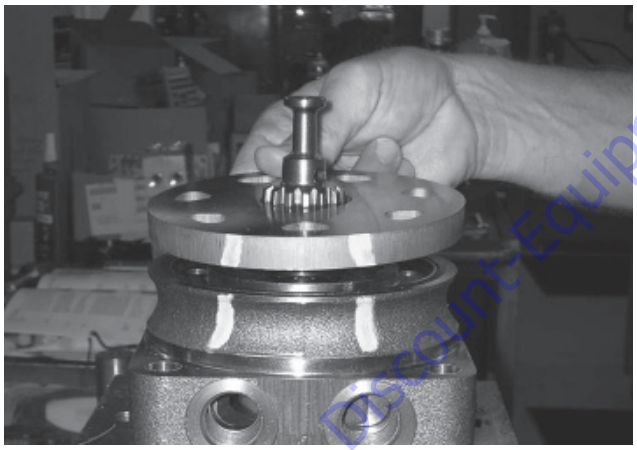

12. Apply a small amount of clean grease to a new seal ring (4) and assemble it into the seal ring groove on the wear plate side of the rotor set stator (8B).

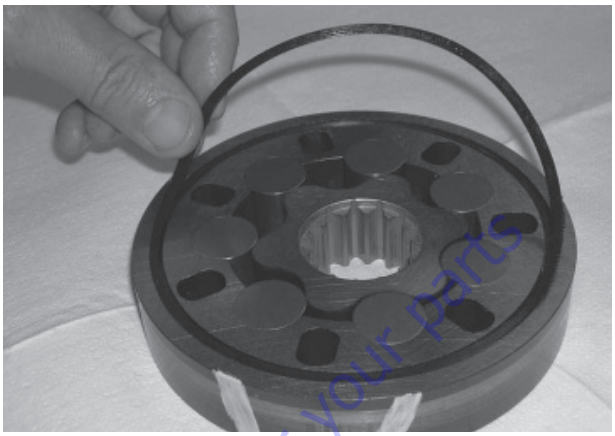

13. Install the assembled rotor set (8) onto wear plate (9) with rotor (8A) counterbore and seal ring side down and the splines into mesh with the drive link splines.

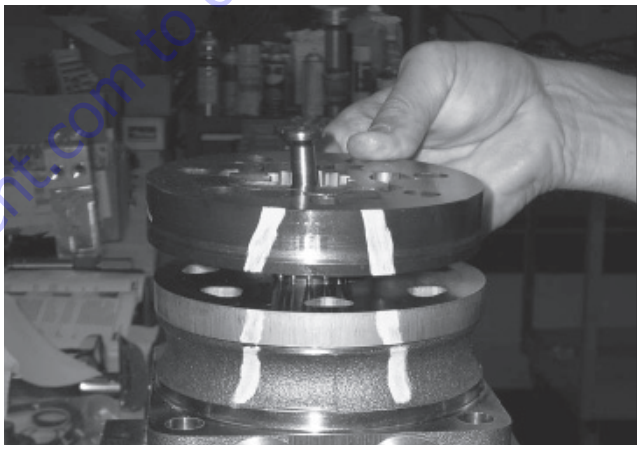

NOTE: *It may be necessary to turn one alignment stud out of the housing (18) temporarily to assemble rotor set (8) or manifold (7) over the drive link.*

NOTE: *If necessary, go to the appropriate, "Rotor Set Component Assembly Procedure."*

NOTE: *The rotor set rotor counterbore side must be down against wear plate for drive link clearance and to maintain the original rotor-drive link spline contact. A rotor set without a counterbore and that was not etched before disassembly can be reinstalled using the drive link spline pattern on the rotor splines if apparent, to determine which side was down.The rotor set seal ring groove faces toward the wear plate (9).*

Go to Discount-Equipment.com to order your parts

14. Apply clean grease to a new seal ring (4) and assemble it in the seal ring groove in the rotor set contact side of manifold (7).

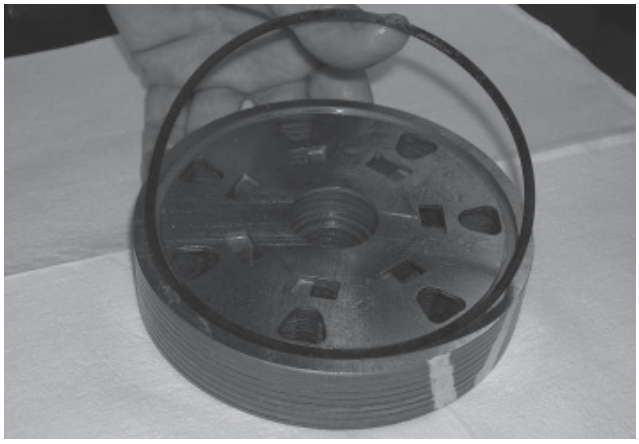

NOTE: *The manifold (7) is made up of several plates bonded together permanently to form an integral component. The manifold surface that must contact the rotor set has it's series of irregular shaped cavities on the largest circumference or circle around the inside diameter. The polished impression left on the manifold by the rotor set is another indication of which surface must contact the rotor set.*

15. Assemble the manifold (7) over the alignment studs and drive link (10) and onto the rotor set. Be sure the correct manifold surface is against the rotor set.

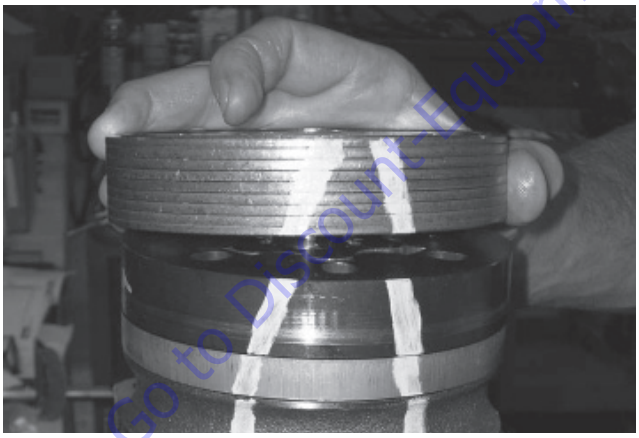

16. Apply grease to a new seal ring (4) and insert it in the seal ring groove exposed on the manifold.

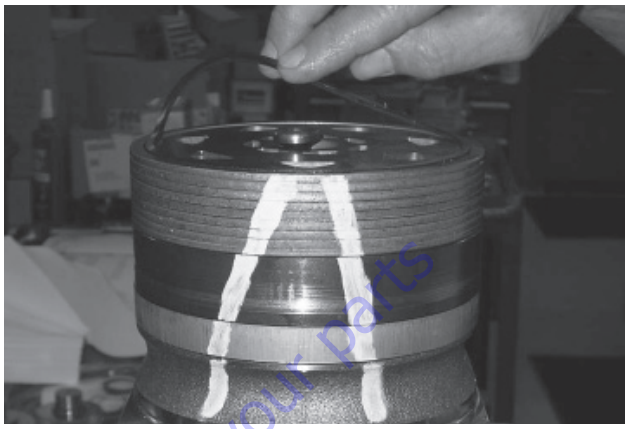

17. Assemble the commutator ring (6) over alignment studs onto the manifold.

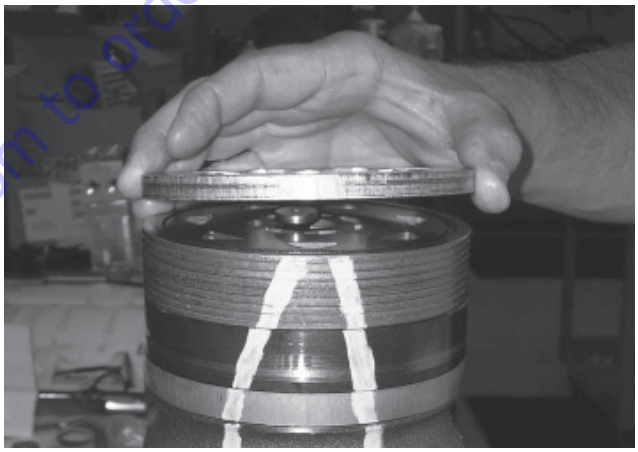

18. Assemble a new seal ring (3) flat side up, into commutator (5) and assemble commutator over the end of drive link (10) onto manifold (7) with seal ring side up.

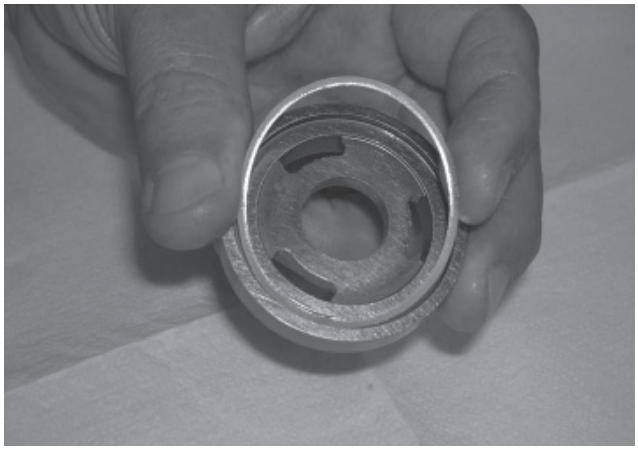

Go to Discount-Equipment.com to order your parts

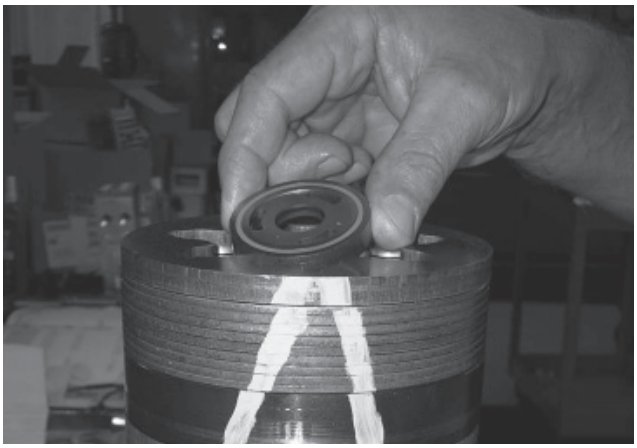

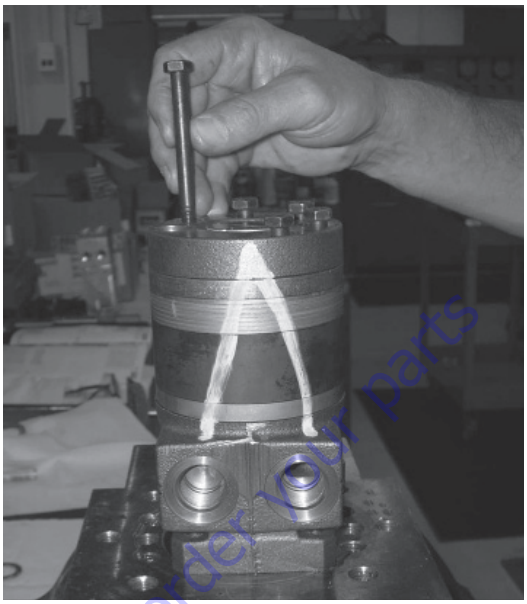

19. Assemble a new seal ring (4) into end cover (2) and assemble end cover over the alignment studs and onto the commutator set. If the end cover has only 5 bolt holes be sure the cover holes are aligned with the 5 threaded holes in housing (18).The correct 5 bolt end cover bolt hole relationship to housing port bosses.

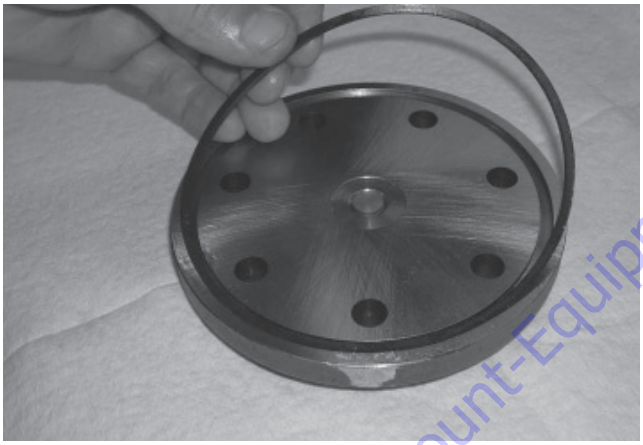

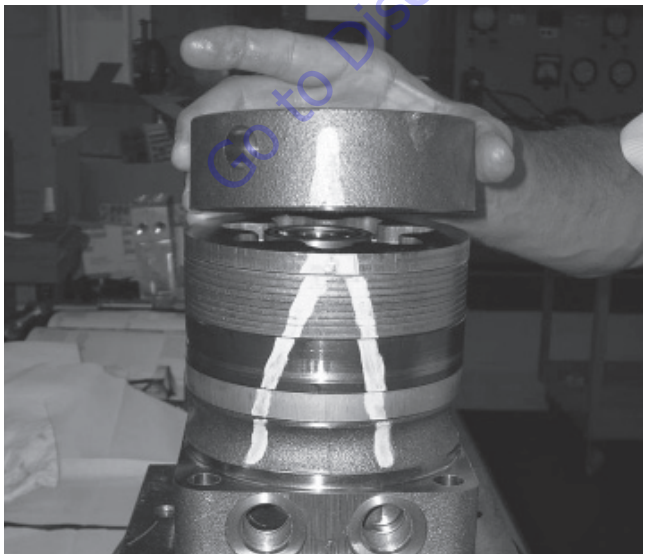

Go to Discount-Equipment.com to order your parts

20. Assemble the 5 or 7 special bolts (1) and screw in finger tight. Remove and replace the two alignment studs with bolts after the other bolts are in place. Alternately and progressively tighten the bolts to pull the end cover and other components into place with a final torque of 50-55 ft. lbs. (68-75 Nm) for the seven 3/8-24 threaded bolts.

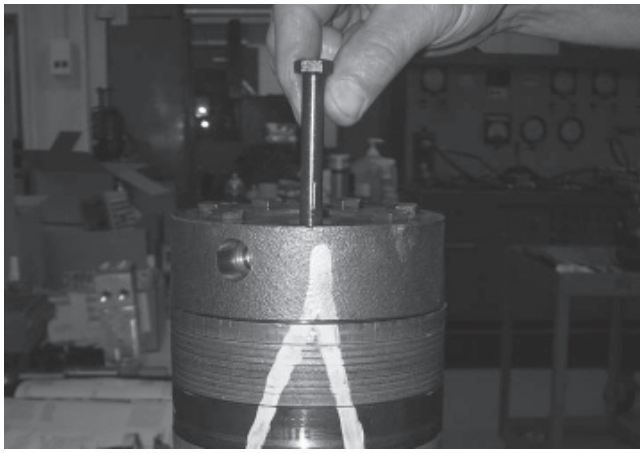

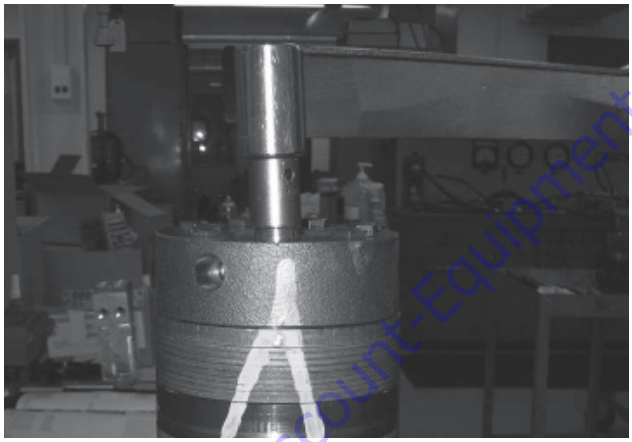

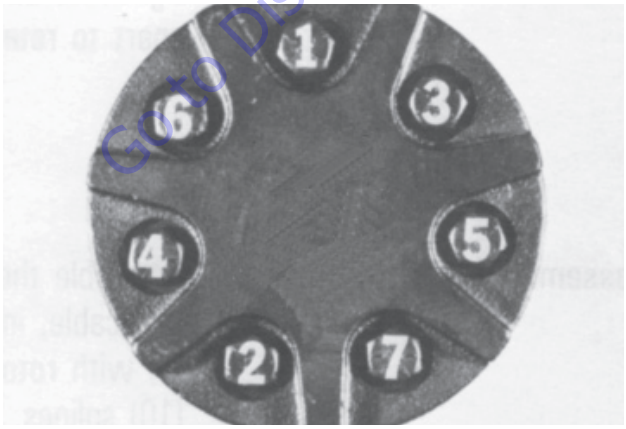

NOTE: *The special bolts required for use with the relief or shuttle valve (24) end cover assembly (2) are longer than the bolts required with standard and cover assembly. Refer to the individual service parts lists or parts list charts for correct service part number if replacement is required.*

21. Torque the two shuttle valve plug assemblies (21) in end cover assembly to 9-12 ft. lbs. (12-16 Nm) if cover is so equipped.

Torque the two relief valve plug assemblies (21) in end cover assembly to 45-55 ft. lbs.(61-75 Nm) if cover is so equipped.

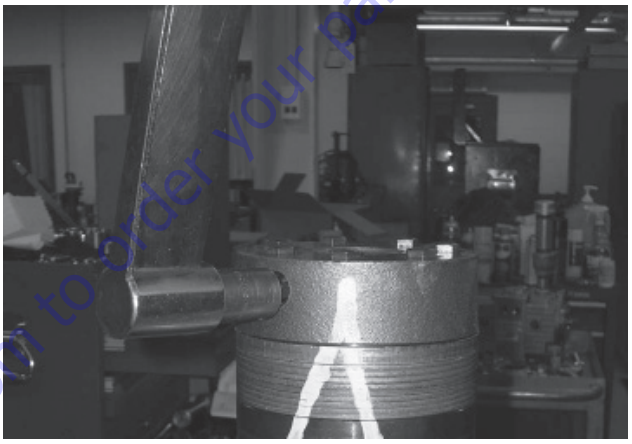

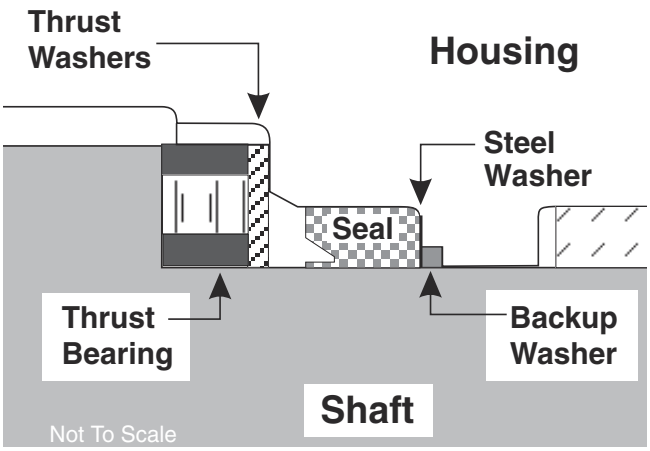

Goto Discount-Equipment.com to order your parts

One Piece Stator Construction

A disassembled rotor (8A) stator (8B) and vanes (8C) that cannot be readily assembled by hand can be assembled by the following procedures.

1. Place stator (8B) onto wear plate (9) with seal ring (4) side down, after following Torqmotor™ assembly procedures 1 through 13. Be sure the seal ring is in place.

2. If assembly alignment studs are not being utilized, align stator bolt holes with wear plate and housing bolt holes and turn two bolts (1) finger tight into bolt holes approximately 180 degrees apart to retain stator and wear plate stationary.

3. Assemble the rotor (8A), counterbore down if applicable, into stator (8B), and onto wear plate (9) with rotor splines into mesh with drive link (10) splines.

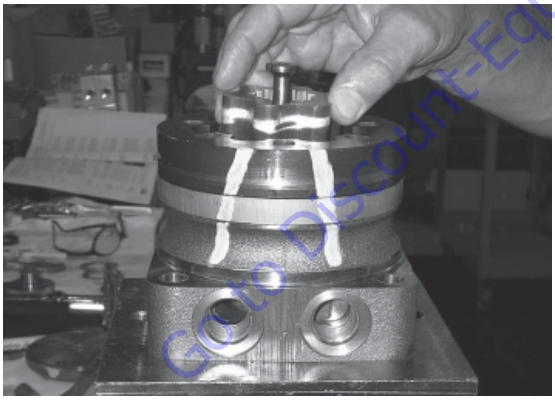

NOTE: *If the manifold side of the rotor was etched during Torqmotor disassembly, this side should be up. If the rotor is not etched and does not have a counterbore, use the drive link spline contact pattern apparent on the rotor splines to determine the rotor side that must be against the wear plate.*

4. Assemble six vanes (8C), or as many vanes that will readily assemble into the stator vane pockets.

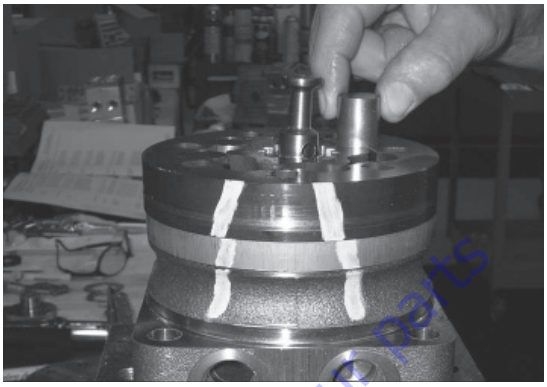

NOTICE

EXCESSIVE FORCE USED TO PUSH THE ROTOR VANES INTO PLACE COULD SHEAR OFF THE COATING APPLIED TO THE STATOR VANE POCKETS.

5. Grasp the output end of coupling shaft (12) with locking pliers or other appropriate turning device and rotate coupling shaft, drive link and rotor to seat the rotor and the assembled vanes (8C) into stator (8B), creating the necessary clearance to assemble the seventh or full complement of seven vanes. Assemble the seven vanes using minimum force.

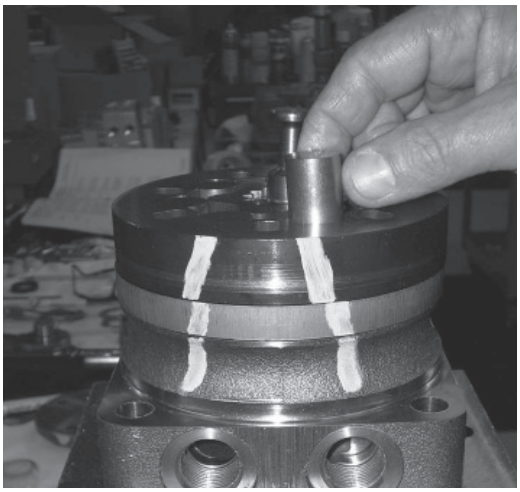

6. Remove the two assembled bolts (1) if used to retain stator and wear plate.

Go to Discount-Equipment.com to order your parts

3.19 ROTARY COUPLING (PRIOR TO SN 0300138447)

Use the following procedure to install the seal kit.

1. Remove retaining ring (7) from end.
2. Remove ring (6) from the same end.
3. Remove center body (1) from housing (3).
4. Cut off old seals (2, 4, 5).
5. Assemble lip seals (2) in direction shown in Figure 3-56., Rotary Coupling Seal Installation (Prior to SN 0300138447).
6. Reassemble o-ring (4).
7. Assemble cap seals (5) over o-rings
8. Reinsert center body into housing (lube with hydraulic oil).
9. Replace ring (6) and snap ring (7).

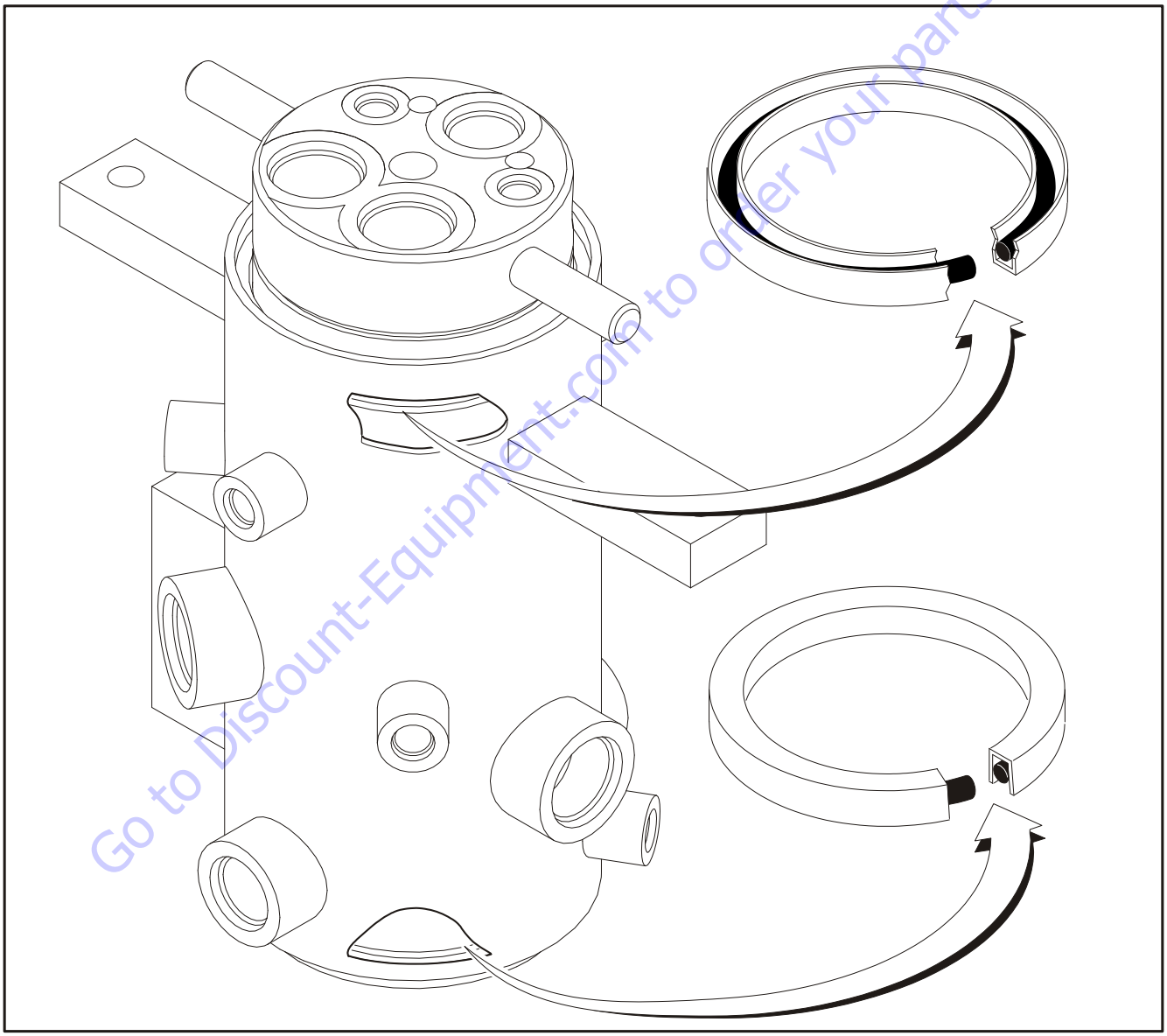

Go to Discount-Equipment.com to order your parts

Figure 3-56. Rotary Coupling Seal Installation (Prior to SN 0300138447)