MENEGOTTI TECHNICAL MANUAL

WHEELBARROW MIXER
5 CuFt

Illustrative Image.

Discount Equipment

www.discount-equipment.com

Go to Discount-Equipment.com to order your parts

Attention:

Before operate **Menegotti equipment**, read this **technical manual**, itself will inform and instruct the operator about the operation.
By the way, you avoid possible working accidents and early maintenance on at the equipment.

MENEGOTTI
NORTH AMERICA

PARTS FINDER

Search Website by Part Number

Discount Equipment

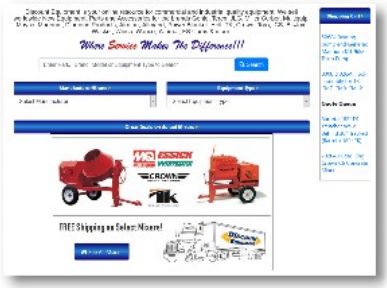

Search Manual Library For Parts Manual & Lookup Part Numbers – Purchase or Request Quote

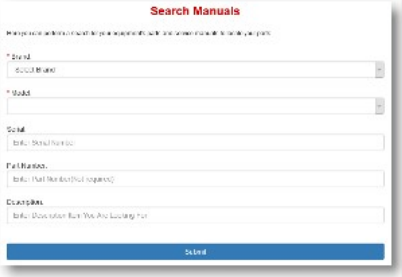

Can't Find Part or Manual? Request Help by Manufacturer, Model & Description

Discount-Equipment.com is your online resource for quality parts & equipment.

Florida: 561-964-4949 Outside Florida TOLL FREE: 877-690-3101

Need parts?

Click on this link: http://www.discount-equipment.com/category/5443-parts/ and choose one of the options to help get the right parts and equipment you are looking for. Please have the machine model and serial number available in order to help us get you the correct parts. If you don't find the part on the website or on one of the online manuals, please fill out the request form and one of our experienced staff members will get back to you with a quote for the right part that your machine needs.

We sell worldwide for the brands: Genie, Terex, JLG, MultiQuip, Mikasa, Essick, Whiteman, Mayco, Toro Stone, Diamond Products, Generac Magnum, Airman, Haulotte, Barreto, Power Blanket, Nifty Lift, Atlas Copco, Chicago Pneumatic, Allmand, Miller Curber, Skyjack, Lull, Skytrak, Tsurumi, Husquvarna Target, Stow, Wacker, Sakai, Mi-T-M, Sullair, Basic, Dynapac, MBW, Weber, Bartell, Bennar Newman, Haulotte, Ditch Runner, Menegotti, Morrison, Contec, Buddy, Crown, Edco, Wyco, Bomag, Laymor, EZ Trench, Bil-Jax, F.S. Curtis, Gehl Pavers, Heli, Honda, ICS/PowerGrit, IHI, Partner, Imer, Clipper, MMD, Koshin, Rice, CH&E, General Equipment ,Amida, Coleman, NAC, Gradall, Square Shooter, Kent, Stanley, Tamco, Toku, Hatz, Kohler, Robin, Wisconsin, Northrock, Oztec, Toker TK, Rol-Air, APT, Wylie, Ingersoll Rand / Doosan, Innovatech, Con X, Ammann, Mecalac, Makinex, Smith Surface Prep,Small Line, Wanco, Yanmar

Congratulations on purchasing a Menegotti product!

With the highest quality, designed and built especially to serve you with technology to suit your needs.

This manual was written to provide you with the information and instructions necessary for the use and maintenance of our equipment, as well as to present you with data relating to its technical characteristics.

Before you put your equipment into operation for the first time, carefully read the information contained herein.

The durability of your equipment depends only on the way it is treated during service (operation) and its satisfactory performance is the result of your careful work, carried out regularly.

Menegotti is prepared to offer you all the necessary technical assistance, as well as to meet yourneeds for spare parts.

Welcome, you are now a part of the great Menegotti "client family".

MENEGOTTI After Sales and
Technical Assistance departments.

Caution: For best convenience, keep this manual in a appropriate place where it can be consulted when necessary.

Index

Menegotti Group 03
The Product 03
Safety Information 03
Main Components 04
Technical Specifications 05
Working and Operating Conditions 06
Equipment Cleaning 06
Equipment Grounding 07
Electric Diagram 08
Lubrification 09
Leveling adjustment and transportation 09
Working Operation 10
Assembly procedures 11
Exploded view / Spare Parts 13
Product Warranty 15
Warranty Term 15

Go to Discount-Equipment.com to order your parts

Menegotti **Group**

Menegotti is reference in the development of solutions in machines and tools for the Construction machinery, Handling and Lawn | Garden Segments.
A Brazilian company, present in more than 40 countries, has its headquarters in Jaraguá do Sul, Santa Catarina, units in Brazil and in the United States.
With more than 80th years of history, it is in the fourth generation of consistent and successful family management.
National leader in sales of concrete and cement mixers, it stands out in the resale and rental market.
Through its Innovation Program, it fosters creativity and competitiveness, with disruptive actions and partnerships, aimed at continuous professional and business growth.
With an organizational culture that values and encourages its constant professional and personal development, Menegotti is active in sustainable projects, which make its purpose of contribute "to build a better and more sustainable world", a reality.

The **Product**

Product designed for construction works with great performance and low maintenance, with double mixing blades that increase the efficiency. The drum rotation occurs through an electric motor. The discharge system is manual and features transmission mechanisms that facilitate its operation requiring the minimum of human effort.

Note: With the aim of constantly improving their equipment, Menegotti reserves the right to change the features of the product without notice.

Safety **Informations**

This manual must be completely read before any operation. On it there is useful information about the product, manufacturer, safety, replacement parts, maintenance and conservation. Keep this manual, on a proper place, so it may be consulted when necessary.

- Before using this equipment, carefully, read this manual and follow the Manufacturer's information, such as, how to reduce the risk of accidents in operation.
- It is expressly prohibited to remove or alter any safety device or feature, if it occurs Menegotti will not be held responsible.
- Use the equipment according to the instructions on this manual.
- In case of damage or missing parts, contact MGT North America on our telephone number 770 9107450 for replacement.
- With the machine turned off, conduct a daily inspection of the machine's parts. In case of problems, immediately contact Mengotti's authorized service.
- Maintain a limited area exclusive for working with the equipment, always keeping this place clean, without obstructions and with proper illumination.
- The operator must be trained or qualified to operate this equipment.

Go to Discount Equipment.com to order your

- Do not use clothing that is too loose and which might get caught in the machine.
- Always wear gloves, safety gloves and ear protection.
- The engines must be installed by qualified professionals.
- Perform the maintenance recommended on this manual with qualified people and within the correct periods.
- Inspect all electrical, mainly regarding cuts, cable friction and broken connections.
- Never use extensions that are not in good conditions.
- Never use wet extensions or operate in wet environments (i.e. Puddles).
- When cleaning the equipment, never throw water on the motor.
- Whenever performing maintenance on this equipment, disconnect the power cable from its source.
- Avoid contact with hot surfaces.
- Before performing any activity or maintenance, first let the motor cool down.
- Avoid contact with rotating parts.

Go to Discount-Equipment.com to order your parts

Main **Components**

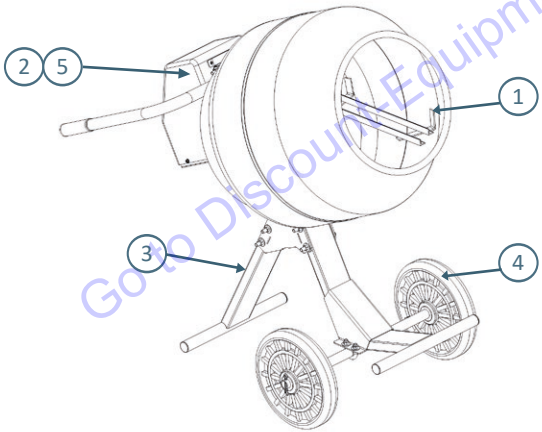

Pos.	Component
1	Drum
2	Motor Box
3	Chassi
4	Wheel
5	Electrical Safety Kit

Technical **Specifications**

WHEELBARROW MIXER	
Drum Capacity	5.0 CuFt
Final Mixture Return	2.3 CuFt
Cycles/hours Quantity	15 Cycles
Mix Capacity	2.83 CuFt
Hour Production	42.4 ft^3/h
Drum Rotation	30 rpm (60Hz) / 28 rpm (50Hz)
Electrical Engine	Single-Phase 1/2CV 115/230V UL Certification / CE Compliant
Transmission	V-Belt 3L-230
Net weight with engine	135.6 lbs
Carton Dimensions	23 5/8" x 23 5/8" x 24 1/64"

Electrical Extension	0 to 20 meters	20 to 30 meters	Above 30 meters
Gauge	2.50 mm^2	4.00 mm^2	Not recommended

Go to Discount-Equipment.com to order your parts

Working and Operating **Conditions**

• Attentively read this instruction manual;
• Can be used inside or outside;
• The introduction of any object in the drum, as it is on, can cause serious accidents;
• Any not proper use may consist on a threat to the operator and people nearby physical integrity;
• The operator should be trained or qualified to operate this equipment;
• Keep an exclusive and limited area to work with the equipment, maintaining it cleaning with no obstructions and good illumination;
• Whenever performing maintenance on this equipment, disconnect the power cable from its source;
• Perform the maintenance recommended on this manual with qualified people and within the correct periods.

Noise Level during Operation

Once the noise level during the Mixer's operation in the drum can reach 95dBA, it is recommended the use of ear protectors during prolonged operation.

Electrical Characteristics

• Always check if the tension on the power line corresponds to the voltage indicated on the motor's plate identification;
• The maximum length of electrical extensions should not be over 30m. If a bigger extension is needed a technician should be questioned so that the right gauge will be chosen. A bad dimensioned extension may cause fire risks and motor burn;
• Engaging the motor at a different voltage results in damage to the motor;
• Ensure that circuit breakers, electric cables, sockets, and grounding are compatible with that specified in the motor;
• The electrical voltage must not exceed variations of more or less than 10% as it may cause the motor to burn.

Equipment **Cleaning**

• The equipment must be unplugged;
• Always clean the equipment after use;
• Clean the drum with water, removing all residue from the blades, internal and external parts of the drum;
• Clean the rack and pinion, removing all abrasive material from the components;
• Take care not to wet the motor.

Go to Discount-Equipment.com to order your parts

Equipment **Grounding**

• The correct grounding of the concrete mixer is important to reduce the risk of electric shock;
• Make sure that the plug has a pin for grounding , the ground wire must be properly secured to the motor and chassis of the machine as shown in the figures below;
• Use a copper rod of recommended depth and length for 2 meters;
• The ground wire when passing by the on/off switch must not be interrupted or connected to the contacts;
• Do not connect the concrete mixer ground wire directly to the neutral wire;
• The grounding must be done in accordance with the country standards and accompanied by a technically qualified person. In the absence of these standards, it must be carried out according to international standards. Doubts regarding installation contact Menegotti Authorized Service.

Go to Discount-Equipment.com to order your parts

Grounding - Motor

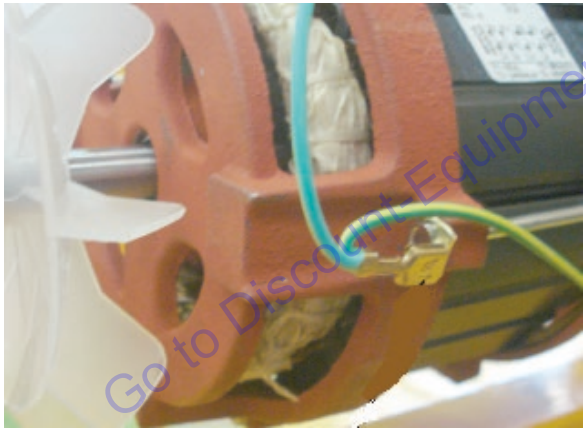

Grounding - Concrete Mixer

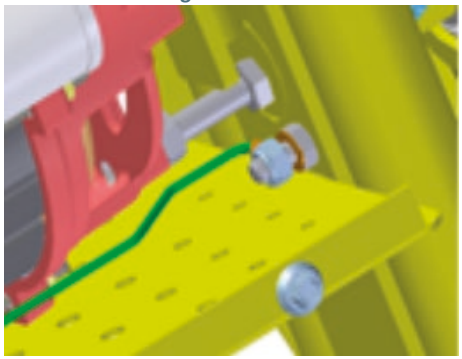

Electric **Driagram**

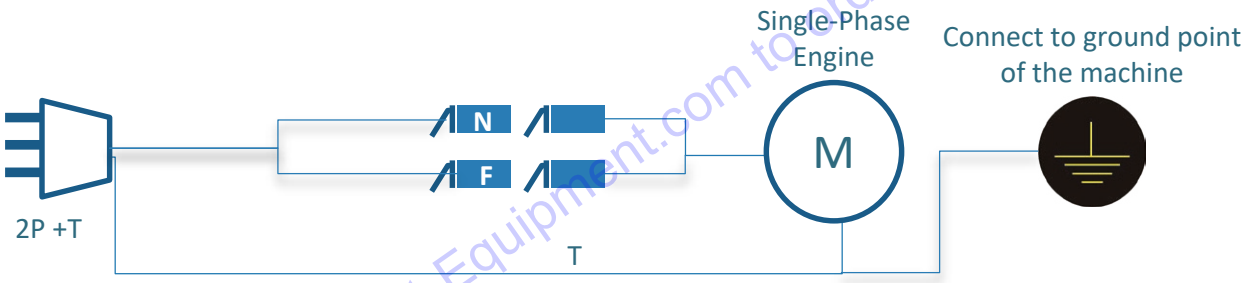

Go to Discount-Equipment.com to order your parts

Lubrication

• Keep machine rotating parts lubricated, such as: pinion, gear ring, bushings, and bearings (with the help of the grease fittings installed in the machine);

• Lubricate the equipment at the beginning of operation, applying grease to all lubrication points;

• Lubrication of the pinion/rack gear assembly is not recommended due to the fact that aggregates such as sand, cement and gravel dust, among others, can adhere to the lubricating agent, causing the mixture to become extremely abrasive, thus resulting in premature wear.

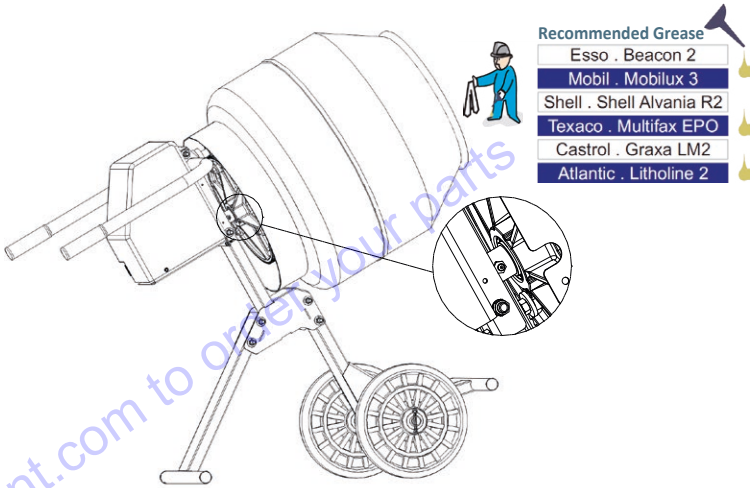

Leveling Adjustment and **Transportation**

• Do not exceed 5 degrees of inclination relative to ground level.

• The equipment has handlebar to raise a few inches from the ground and transport through the wheels;

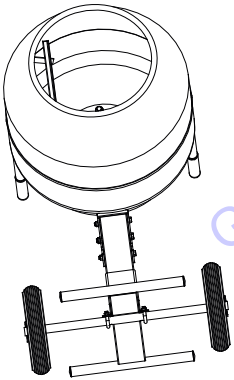

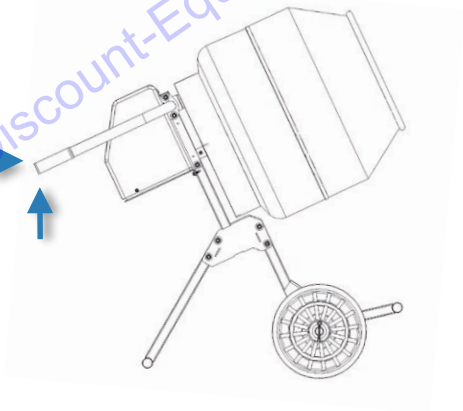

Go to Discount-Equipment.com to order your parts

Working **Operation**

- Place the concrete mixer on a plain and firm surface in a way to make easier the loading and unloading processes.
- Connect the switch which is in the motor protection box remembering to follow recommendations for the extension.
- Fill the drum and let it mix;
- Once mixing is concluded, tilt the drum until the mixture is discharged;
- During the whole cycle the drum must be rotating.

1. Use a ti for measuring the components.

2. Place the stone inside the drum when the machine is **running.**

3. Add half of the water and mix for **one minute**.

4. Add the cement.

5. Finally add the sand and the rest of water.

6. Let teh concrete mixer rotate for **2.5 minutos** before using the concrete.

Images for illustrative purposes only.

Go to Discount-Equipment.com to order your parts

Assembly **Procedures**

Check List

Name	Qty.
Central chassis assembly	1
Front chassis assembly	1
Rear chassis assembly	1
Drum	1
Handlebar	2
Wheel axle	1
Wheel	2
Hexagon bolt 3/8” x 4.1/2” UNC	7
Nut 3/8”	11
Flat washer 3/8”	14
Shaft flat washer	2
Counter-pin	2

Check out the Menegotti demo video.

1 - Assemble the chassis using the washers, nuts, and screws 3/8" supplied with the equipment.

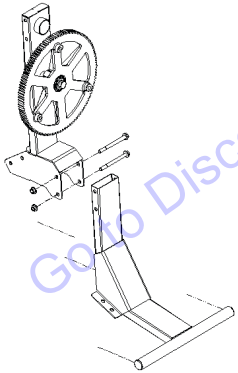

2 - Assemble the rear chassis using washers, nuts and bolts 3/8" supplied with the equipment.

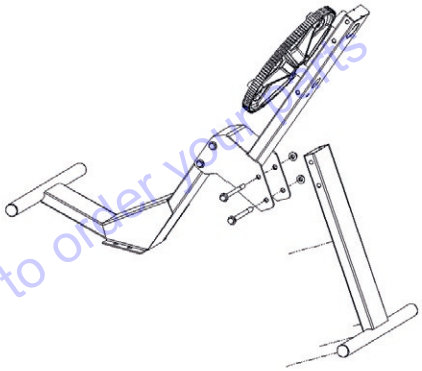

3 - Put the drum down. Place the chassis in the drum so that the gear rack crown engages the screws on the bottom of the drum. Tighten the nuts.

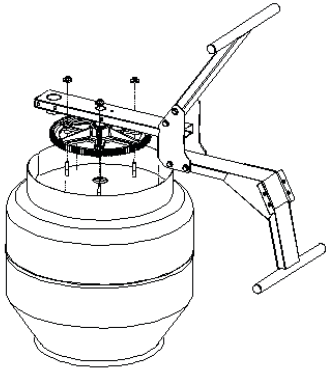

Go to Discount-Equipment.com to order your parts

4 - Keep the drum down. Fit the engine housing into the chassis. Check the gear rack and pinion coupling. If there is no coupling, rotate the chassis until it engages the gear rack on the pinion.

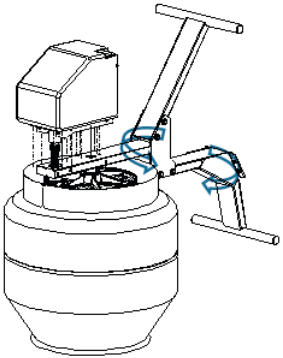

5 - Mount the handlebar to the engine case on the machine chassis.

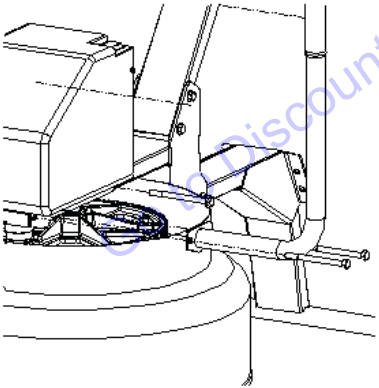

6 - Mount the axle in the chassis fixing with the nuts 3/8 " using the marks to assist the centralizing process. Mount the wheel on the end of the shaft. Attach the cotter pin to the shaft.

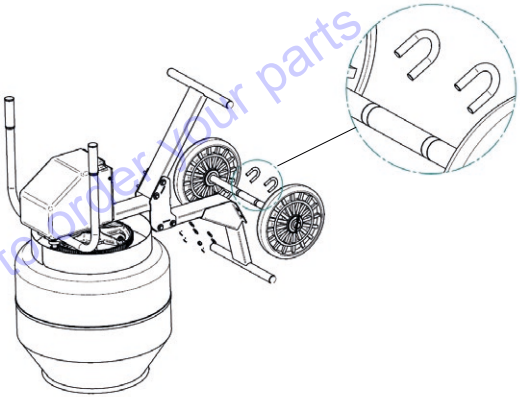

7 - Assembly complete.

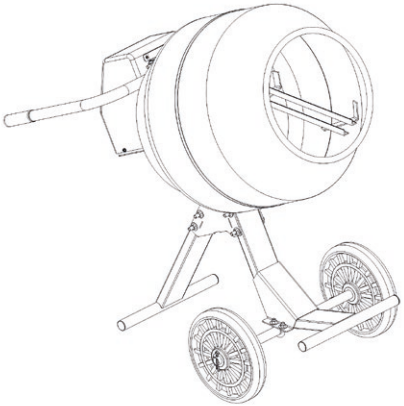

Go to Discount-Equipment.com to order your parts

Exploded **View** / Spare **Parts**

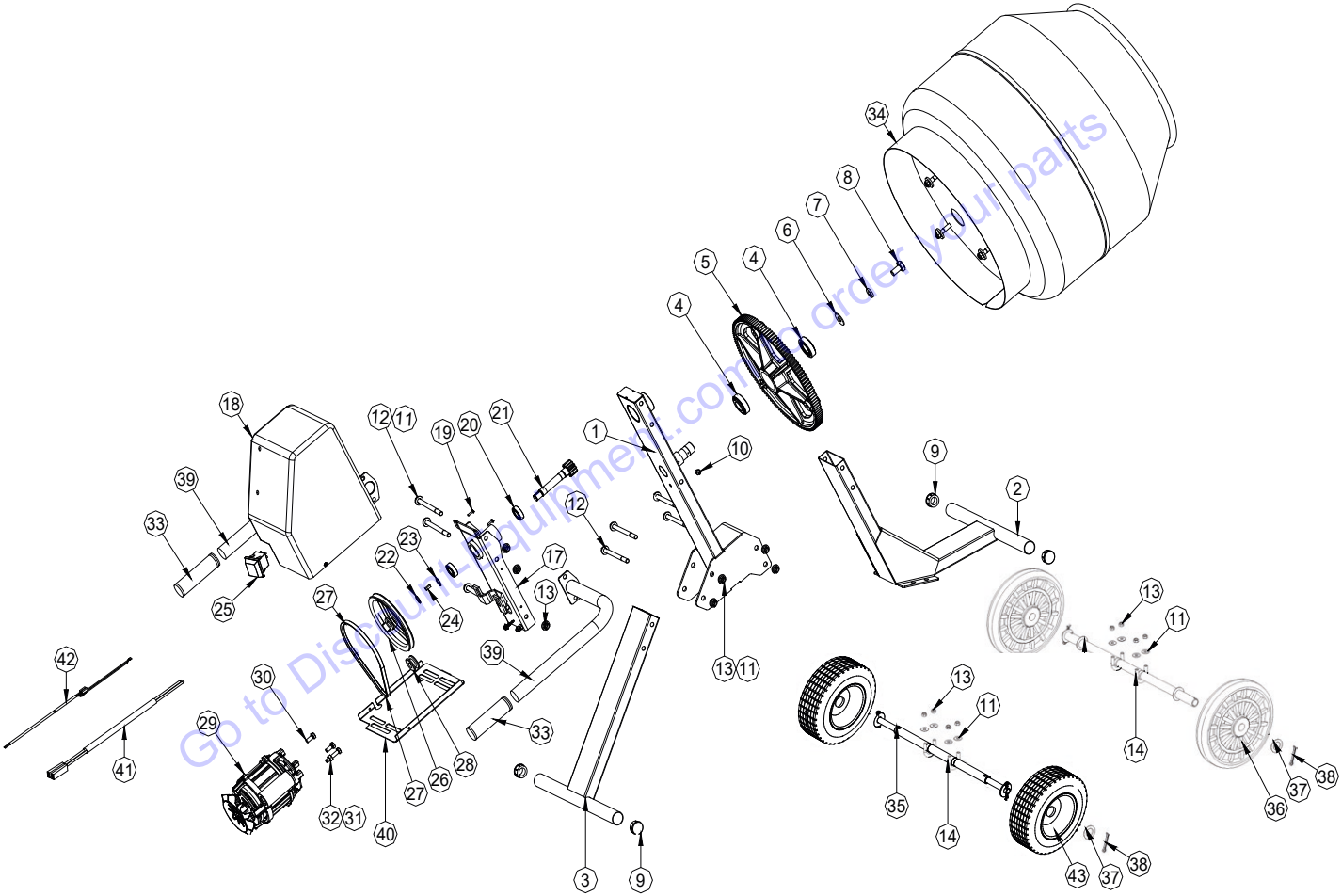

Go to Distributeur-equipement.com to order your parts

No.	Name	Qty.	Code	Drawing
1	Central chassis assembly	1	33110209	3110209
2	Front chassis assembly	1	33112195	3112195
3	Rear chassis assembly	1	33112192	3112192
4	Bearing 30205	2	22020603	-
5	Gear Rack Z128 / M2,5	1	2124006	2124006
6	Flat washer 1/2"	1	21030250	-
7	Spring washer 1/2"	1	21030164	-
8	Hexagon Screw 1/2"	1	21010409	-
9	Plug Ø 1.1/4"	4	24110111	4122426
10	Grease Cup M10	1	24040152	-
11	Flat washer 3/8” x 4.1/2"	18	21030251	-
12	Hexagon Screw 3/8"	7	21010250	-
13	Self-locking Hexagonal Nut 3/8” UNC	11	21021059	-
14	Hook “U”	2	21012483	4122427
17	Engine Box Support	1	33108456	3108456
18	Engine Box	1	24110108	3108008
19	Screw 5x14mm	2	21011023	-
20	Bearing 6003	2	22020203	-
21	Pinion assembly	1	31020177	3123009
22	Elastic Ring Ø15	1	21060113	-
23	Elastic Ring Ø17	1	21060115	-

No.	Name	Qty.	Code	Drawing
24	Key 5x5x14mm	1	21130120	-
25	ON/OFF Switch	1	26100412	-
26	Pulley	1	29110217	4109045
27	V-belt 3L - 230	1	22010360	-
28	Pulley Engine	1	31090265	4122374
29	Single-phase Engine 1/2CV 60Hz 115/230V	1	23014623	-
30	Hexagonal Screw M8x20	2	21012931	-
31	Hexagonal Screw M8x45	1	21012814	-
32	Hexagonal Nut M8	1	21021105	-
33	Handle	2	24070171	4122390
34	Drum 130L - 3 blades	2	34600041	2107097
35	Axle Assembly (without wheels)	1	-	3120001
	Axle Assembly (without wheels) for 14" rims		-	3120002
36	Rubber Wheel	2	3115109	3115109
37	Flat Washer (Wheel) 28x45x2,7	2	21030336	-
38	Cotter Pin	2	21050106	-
39	Handlebar	2	32040077	4122423
40	Box Bottom	1	32040228	3108399
41	Single-phase Cable	1	26010435	4122410
42	Assembly Electric Cables without Plug	1	26010421	4127011
43	Wheel 14"	2	29119213	-

Go to Discount-Equipment.com to order your parts

Product Warranty

The warranty is not transferable under the conditions and within the prescribed period and will be valid from the date of purchase of the equipment, through presentation of the sales invoice to the first end consumer. At the time of delivery of the equipment, the customer must receive the information and technical guidelines for the equipment as per the content of this manual.

Therefore, defects caused by mistreatment, carelessness, negligence, recklessness or malpractice, are not covered by this warranty, nor are any repairs or alterations of any part and/or piece of equipment. Also not covered is any assembly of the parts by any party other than the factory itself or Technical Assistant, application outside the specification, mechanical or electrical overloads or phase failure, use in an environment for which it was not designed, incorrect voltages of frequencies, incorrect lubrication, damage caused by accidents of any kind, such as floods, strong winds, fires, landslides or resulting from transportation.

The removal or alteration of the serial numbers originally placed on the product void the warranty, which must be presented on the sales invoice and the Warranty Certificate for the equipment in question.

The warranty assumed is limited to the repair, spare parts or parts assembly of the set of parts, in which the review is conducted by an Authorized Menegotti Technical Assistant and authorized in advance by the Factory, to double check the existence of the manufacturing defect. This repair or exchange will be made by an Authorized Technical Assistant, with the buyer bearing the risks or costs of transportation to and from the Technical Assistant, with the labor and replaced parts being free, under the terms of this warranty.

This supersedes any other warranty, express or implied as well as any and all liability or responsibility of our company concerning the above product.

MENEGOTTI After Sales and Technical Assistance departments.

Warranty Term

By the present CERTIFICATE provided from original purchaser, Menegotti guarantees this product against manufacturing defects, for a period of 12 (twelve) months, counted from the invoice issue date of the first final consumer. The components of daily use such as: bearings, clutch disc, gears, tires, brake shoes, etc. are not included in the warranty.

This warranty includes spare parts and repair against manufacturing defects duly verified by the factory or Authorized Technical Assistance. The warranty for this product will be void if it suffers damage caused by accidents, natural events, application outside the specification, or in the case of alterations or repairs by a person or workshop not authorized by Menegotti. The product freight charges, including the technical assistant or factory, are borne by the consumer.

If the equipament is purchased with the eletric engine warranty covers defects arising from the internal engine manufacture. Not covered by warranty defects of: broken or crushed shell due to carelessness in transporting/or storage, energization of the motor coupling or out specifcation defects, general misuse and /or incorrect installation, overcharging due to lack or excess of phase and use of voltage out of the specification.

Aware of this term,

Customer:_____
Model:_____ **Serial Number:** _____
City:_____ **Date:**_____

Customer *Menegotti Authorized Service*

Go to Discount-Equipment.com to order your parts

PARTS FINDER

Search Website by Part Number

Discount Equipment

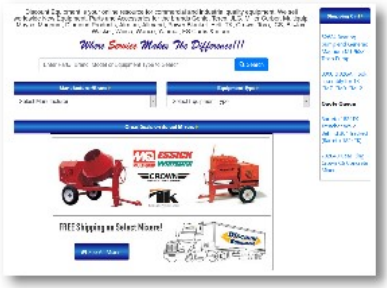

Search Manual Library For Parts Manual & Lookup Part Numbers – Purchase or Request Quote

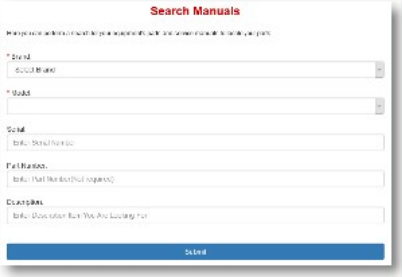

Can't Find Part or Manual? Request Help by Manufacturer, Model & Description

Discount-Equipment.com is your online resource for quality parts & equipment.

Florida: 561-964-4949 Outside Florida TOLL FREE: 877-690-3101

Need parts?

Click on this link: http://www.discount-equipment.com/category/5443-parts/ and choose one of the options to help get the right parts and equipment you are looking for. Please have the machine model and serial number available in order to help us get you the correct parts. If you don't find the part on the website or on one of the online manuals, please fill out the request form and one of our experienced staff members will get back to you with a quote for the right part that your machine needs.

We sell worldwide for the brands: Genie, Terex, JLG, MultiQuip, Mikasa, Essick, Whiteman, Mayco, Toro Stone, Diamond Products, Generac Magnum, Airman, Haulotte, Barreto, Power Blanket, Nifty Lift, Atlas Copco, Chicago Pneumatic, Allmand, Miller Curber, Skyjack, Lull, Skytrak, Tsurumi, Husquvarna Target, Stow, Wacker, Sakai, Mi-T-M, Sullair, Basic, Dynapac, MBW, Weber, Bartell, Bennar Newman, Haulotte, Ditch Runner, Menegotti, Morrison, Contec, Buddy, Crown, Edco, Wyco, Bomag, Laymor, EZ Trench, Bil-Jax, F.S. Curtis, Gehl Pavers, Heli, Honda, ICS/PowerGrit, IHI, Partner, Imer, Clipper, MMD, Koshin, Rice, CH&E, General Equipment ,Amida, Coleman, NAC, Gradall, Square Shooter, Kent, Stanley, Tamco, Toku, Hatz, Kohler, Robin, Wisconsin, Northrock, Oztec, Toker TK, Rol-Air, APT, Wylie, Ingersoll Rand / Doosan, Innovatech, Con X, Ammann, Mecalac, Makinex, Smith Surface Prep,Small Line, Wanco, Yanmar

Menegotti GROUP

Solid values, sustainable future.

MENEGOTTI HANDLING

MENEGOTTI CONSTRUCTION

MENEGOTTI HOUSE & GARDEN

Discount Equipment

www.discount-equipment.com

Discount-equipment.com to order your parts

REV. 14 | AUGUST/2025 | Cod. 24050971