AIRMAN

PC

PARTS CATALOG

SCREW COMPRESSOR

PDS185L-5E1

Go to Discount-Equipment.com to order your parts

Discount Equipment

www.discount-equipment.com

HOKUETSU INDUSTRIES CO., LTD.

PARTS FINDER

Search Website by Part Number

Discount Equipment

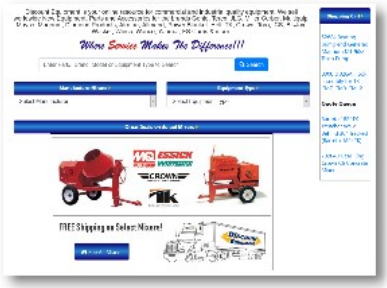

Search Manual Library For Parts Manual & Lookup Part Numbers – Purchase or Request Quote

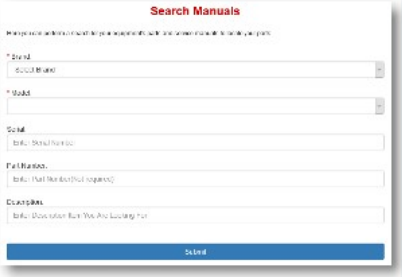

Can't Find Part or Manual? Request Help by Manufacturer, Model & Description

Discount-Equipment.com is your online resource for quality parts & equipment.

Florida: 561-964-4949 Outside Florida TOLL FREE: 877-690-3101

Need parts?

Click on this link: http://www.discount-equipment.com/category/5443-parts/ and choose one of the options to help get the right parts and equipment you are looking for. Please have the machine model and serial number available in order to help us get you the correct parts. If you don't find the part on the website or on one of the online manuals, please fill out the request form and one of our experienced staff members will get back to you with a quote for the right part that your machine needs.

We sell worldwide for the brands: Genie, Terex, JLG, MultiQuip, Mikasa, Essick, Whiteman, Mayco, Toro Stone, Diamond Products, Generac Magnum, Airman, Haulotte, Barreto, Power Blanket, Nifty Lift, Atlas Copco, Chicago Pneumatic, Allmand, Miller Curber, Skyjack, Lull, Skytrak, Tsurumi, Husquvarna Target, Stow, Wacker, Sakai, Mi-T-M, Sullair, Basic, Dynapac, MBW, Weber, Bartell, Bennar Newman, Haulotte, Ditch Runner, Menegotti, Morrison, Contec, Buddy, Crown, Edco, Wyco, Bomag, Laymor, EZ Trench, Bil-Jax, F.S. Curtis, Gehl Pavers, Heli, Honda, ICS/PowerGrit, IHI, Partner, Imer, Clipper, MMD, Koshin, Rice, CH&E, General Equipment ,Amida, Coleman, NAC, Gradall, Square Shooter, Kent, Stanley, Tamco, Toku, Hatz, Kohler, Robin, Wisconsin, Northrock, Oztec, Toker TK, Rol-Air, APT, Wylie, Ingersoll Rand / Doosan, Innovatech, Con X, Ammann, Mecalac, Makinex, Smith Surface Prep,Small Line, Wanco, Yanmar

適　用　型　式
FOR　MODEL

型　　式 MODEL	適　用　号　機 SER. NO.
PDS185L－5E1	B4－7E10051～

原 動 機 型 式 ENGINE MODEL	YANMAR 4TNV88C-DHKS1

Go to Discount-Equipment.com to order your parts

STANDARD PAINTING
標準塗装色

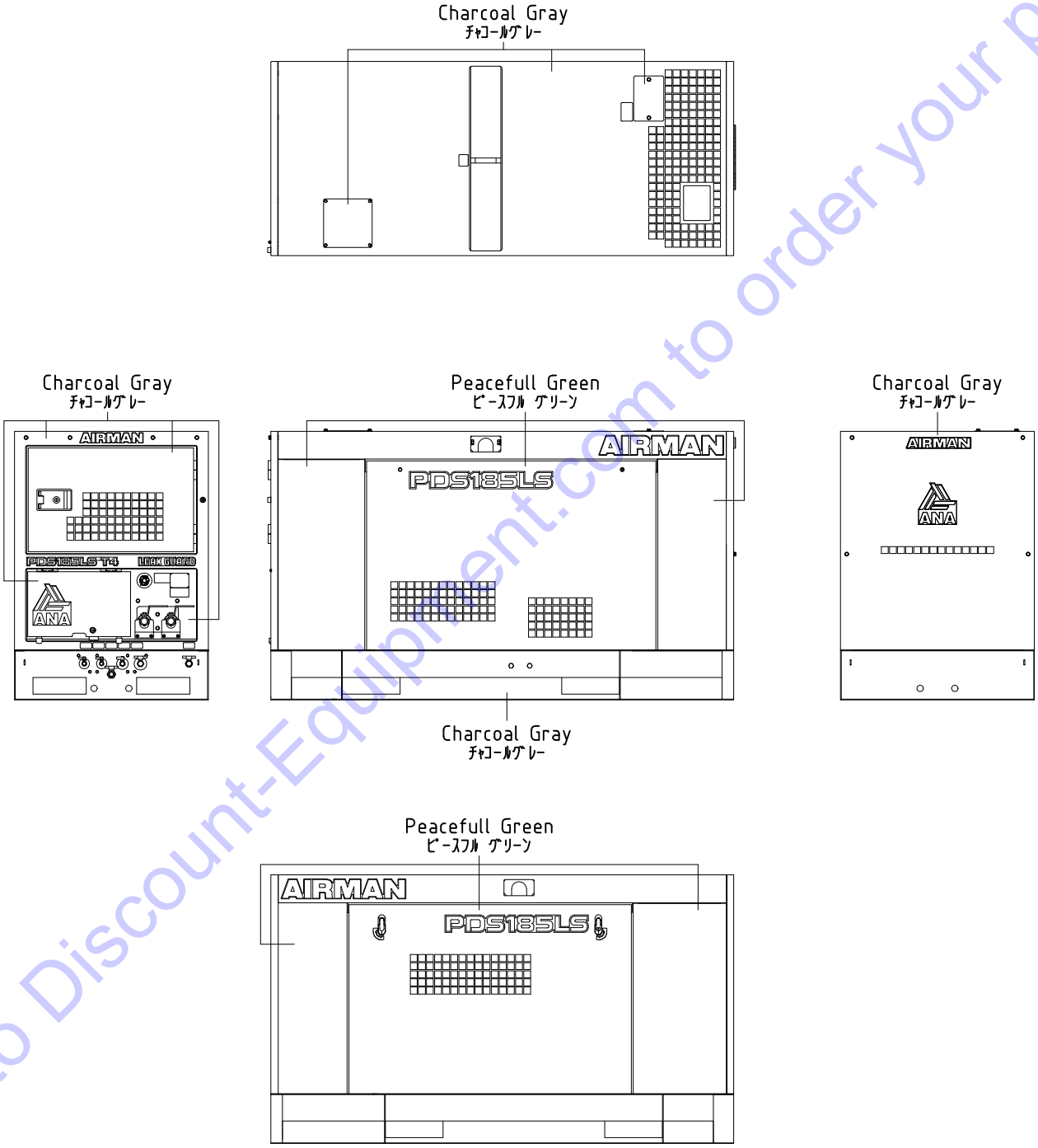

Go to Discount-Equipment.com to order your parts

N O T I C E

1. This parts catalog contains all the parts and assemblies of “AIRMAN” brand products. The complete unit is divided into several parts groups, the details of which are clearly illustrated, and completely listed. So desired part number, name and quantity can be easily determined referring to Ref.No.

2. When you place order for service parts, please be sure to advise us of the following information.
   (1) Part number.
   (2) Quantity required.
   (3) Part name.
   (4) Model name and Serial number.

3. How to read parts catalog.

(8) 備考 Remarks S :STD. SC:w.AFTER COOLER SD:DRY AIR

52 - 00 LINING

(1) 見出番号 Ref.NO.	(2) 部品番号 Part NO.	(3) 互換性 Inter-change ability	(4) 部品名称 Part Name		(5) 数量 Q'ty	(6) 適用号機範囲 Applicable Ser.No.		(7) 変更 C/H	(8) 備考 Remarks		
									S	SC	SD
	52900 04921		URETHANE FOAM KIT	ウレタン フォーム キット					◎		
	52900 05121		URETHANE FOAM KIT (Const.No.1～21)	ウレタン フォーム キット						◎	
	52900 06121		URETHANE FOAM KIT (Const.No.1～9 & 11～24)	ウレタン フォーム キット							◎
1	52959 71350		Lining	ﾗｲﾆﾝｸﾞ	1						
2	52959 97640		Lining	ﾗｲﾆﾝｸﾞ	1						
3	52959 80220		Lining	ﾗｲﾆﾝｸﾞ	1						
4	52959 71450		Lining	ﾗｲﾆﾝｸﾞ	1						
5	52959 71550		Lining	ﾗｲﾆﾝｸﾞ	1						
6	52959 30940		Lining	ﾗｲﾆﾝｸﾞ	1						
7	52959 71650		Lining	ﾗｲﾆﾝｸﾞ	2						

(1) Ref.No.
Reference number (Ref.No.) is to be used for locating the part number and name from the illustrations. (However some parts such as bolts and nuts etc., are not illustrated but their reference numbers only listed.)
Ref.No.1, 1-1, 1-2,…… shows history of part modifications.
[These reference numbers mean 1: primary period, 1-1: first alteration, 1-2: second alteration and 1-3……follows]

(2) Part No.
Every part has its own proper number. Even if a part has the same shape as an other part and if its number different, it is not interchangeable at all in many cases.

(3) Interchangeability
A, B, C, D, E, Q, X, Y and Z in column “Interchangeability” show the following.
A : A new part can replace an old part, but an old part cannot replace a new part.
B : Not interchangeable.
C : Disused.
D : Newly added.
E : Compatible with eachother.
Q : Quantity per unit changed.
X : Included in this set of parts, this part is not used for this model.
Y : Part to be selected.
Z : This part can not be supplied as an individual part.

Go to Discount-Equipment.com to order your parts

(4) Part name
Every part has its own proper name.

(5) Q'ty
The number shown in the column of Q'TY indicates the quantity of parts used per one unit machine.

(6) Applicable Ser.No. (Serial Number)
Ser.No. shows the machine number to which the part is applicable.
Month and year stated in column "Ser.No." show the month and year from which the part is applicable.

(7) Change column
M1, M2,…… Mn mentioned in the column indicate the change of part number and the serial number of the unit, the part of which was modified.

(8) Remarks
This column "Remarks" mentions in mark or signal the specifications of each part, original part number of manufacturer, model name of the part for which is used and etc.
[Example. SC:w.AFTER COOLER]

4. Abbreviations used in this catalog.

ass'y	assembly	L	Length
C/H	Change column	o & p	overrun & parking brake
Comp.	Compressor	OPT.	Option
Const.	Consisting of	Press.	Pressure
Cont.	Control	SPC/S.	Special specifications
Cyl.	Cylinder	STD.	Standards
Eng.	Engine	T or t	Thickness
EXP.	Export	w.	with
Incl.	Including	w/o	without

NOTE : We are always engaged in improving our products. So there may be some changes of the product which are not yet mentioned in this parts catalog. Therefore, in necessary case, we issue a revision in which such changes ars added. When you have any question on the parts catalog, please ask your nearest dealer or directly us.

Go to Discount-Equipment.com to order your parts

目　　次
CONTENTS

図番号 FIG.NO.	図名称 FIG.NAME		頁 PAGE
—COMPRESSOR PARTS—			
21 - 00	AIR END	ｴｱ ｴﾝﾄﾞ	21 - 1
31 - 00	MOUNTING & INTAKE	ﾏｳﾝﾃｨﾝｸﾞ,ｲﾝﾃｰｸ	31 - 1
33 - 00	RECEIVER,SEPARATOR & SERVICE HEADER	ﾚｼｰﾊﾞ,ｾﾊﾟﾚｰﾀ,ｻｰﾋﾞｽ ﾍｯﾀﾞ	33 - 1
36 - 00	AIR LINE	ｴｱ ﾗｲﾝ	36 - 1
37 - 00	OIL LINE	ｵｲﾙ ﾗｲﾝ	37 - 1
38 - 00	COOLING	ｸｰﾘﾝｸﾞ	38 - 1
39 - 00	NAME PLATE	ﾈｰﾑ ﾌﾟﾚｰﾄ	39 - 1
41 - 00	ENGINE & EXHAUST	ｴﾝｼﾞﾝ,ｴｷｿﾞｰｽﾄ	41 - 1
43 - 00	FUEL LINE	ﾌｭｴﾙ ﾗｲﾝ	43 - 1
44 - 00	ELECTRIC	ｴﾚｸﾄﾘｯｸ	44 - 1
51 - 00	FRAME & BONNET	ﾌﾚｰﾑ,ﾎﾞﾝﾈｯﾄ	51 - 1
52 - 00	LINING	ﾗｲﾆﾝｸﾞ	52 - 1
—ENGINE PARTS—			
Fig.1.	CYLINDER BLOCK	ｼﾘﾝﾀﾞ ﾌﾞﾛｯｸ	Fig.1.
Fig.2.	GEAR HOUSING	ｷﾞﾔ ｹｰｽ	Fig.2.
Fig.3.	FLYWHEEL HOUSING & OIL SUMP	ﾌﾗｲﾎｲﾙ ﾊｳｼﾞﾝｸﾞ,ｵｲﾙ ﾊﾟﾝ	Fig.3.
Fig.4.	CYLINDER HEAD & BONNET	ｼﾘﾝﾀﾞ ﾍｯﾄﾞ,ﾎﾞﾝﾈｯﾄ	Fig.4.
Fig.5.	SUCTION MANIFOLD	吸気 ﾏﾆﾎｰﾙﾄﾞ	Fig.5.
Fig.6.	EXHAUST MANIFOLD	排気 ﾏﾆﾎｰﾙﾄﾞ	Fig.6.
Fig.7.	DIESEL PARTICULATE FILTER(DPF)	排気微粒子除去装置(DPF)	Fig.7.
Fig.8.	CAMSHAFT & DRIVING GEAR	ｶﾑｼｬﾌﾄ,駆動 ｷﾞﾔ	Fig.8.
Fig.9.	CRANKSHAFT & PISTON	ｸﾗﾝｸｼｬﾌﾄ,ﾋﾟｽﾄﾝ	Fig.9.
Fig.10.	LUB.OIL SYSTEM	潤滑油 ｼｽﾃﾑ	Fig.10.
Fig.11.	COOLING WATER SYSTEM	冷却水 ｼｽﾃﾑ	Fig.11.
Fig.12.	FUEL SUPPLY PUMP	燃料 ｻﾌﾟﾗｲ ﾎﾟﾝﾌﾟ	Fig.12.
Fig.13.	FUEL INJECTION VALVE	燃料噴射弁	Fig.13.
Fig.14.	FUEL PIPE	燃料 ﾊﾟｲﾌﾟ	Fig.14.
Fig.15.	STARTING MOTOR	ｽﾀｰﾀ ﾓｰﾀ	Fig.15.
Fig.16.	GENERATOR	ｾﾞﾈﾚｰﾀ	Fig.16.
Fig.17.	ELECTRONIC CONTROL UNIT(ECU)	電子制御 ﾕﾆｯﾄ(ECU)	Fig.17.
Fig.18.	ELECTRIC PARTS	電装品	Fig.18.
Fig.19.	ACCESSORY	付属品	Fig.19.
Fig.20.	GASKET SET	ﾊﾟｯｷﾝ ｾｯﾄ	Fig.20.

Go to Discount-Equipment.com to order your parts

型 式 名 の 見 方
HOW TO READ MODELS

Ｐ Ｄ	Ｓ	１８５	Ｌ	－	５ Ｅ	１
①	②	③	④		⑤ ⑥	⑦

① PD ：PORTABLE DIESEL ENGINE
② S ：SCREW(OIL-INJECTION)
③ 185：Free air delivery(cfm)
④ L ：LEAK GUARD TYPE
⑤ 5 ：BOX
⑥ MODEL CHANGE MARK
⑦ VARIATION MARK

① PD ：可搬式,ﾃﾞｨｰｾﾞﾙｴﾝｼﾞﾝ
② S ：ｽｸﾘｭ(ｵｲﾙｲﾝｼﾞｪｸｼｮﾝ)
③ 185：吐出空気量(cfm)
④ L ：ﾘｰｸｶﾞｰﾄﾞ型
⑤ 5 ：ﾎﾞｯｸｽ
⑥ ﾓﾃﾞﾙﾁｪﾝｼﾞ記号
⑦ ﾊﾞﾘｴｰｼｮﾝ記号

Go to Discount-Equipment.com to order your parts

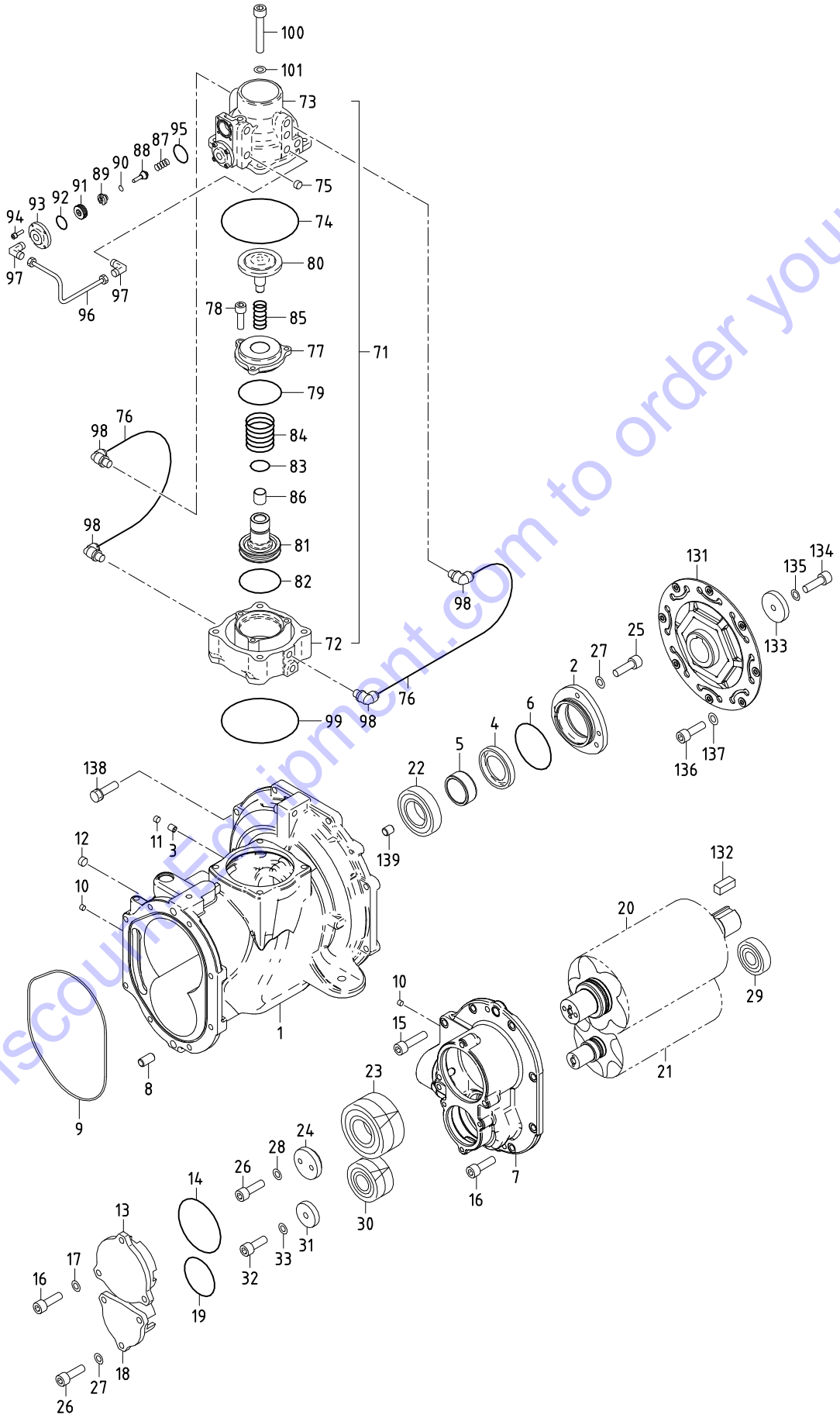

Go to Discount Equipment.com to order your parts

見出番号 Ref.NO.	部品番号 Part NO.	互換性 Inter-change ability	部品名称 Part Name		数量 Q'ty	適用号機範囲 Applicable Ser.No. 5E1	適用号機範囲 Applicable Ser.No. -	変更 C/H	備考 Remarks
	21000 33711		COMPRESSION GROUP	ｺﾝﾌﾟﾚｯｼｮﾝ ｸﾞﾙｰﾌﾟ					
1	21201 44701		Cylinder,1st	ｼﾘﾝﾀﾞ	1				
2	21212 19300		Cover,oil seal	ｵｲﾙ ｼｰﾙ ｶﾊﾞｰ	1				
3	22123 03600		Orifice	ｵﾘﾌｨｽ	1				
4	21211 13001		Oil seal	ｵｲﾙ ｼｰﾙ	1				
5	21465 06600		Collar	ｶﾗｰ	1				
6	03402 15080		O-ring	O-ﾘﾝｸﾞ	1				
7	21217 34501		Casing,discharge	ﾃﾞｨｽﾁｬｰｼﾞ ｹｰｼﾝｸﾞ	1				
8	03316 14028		Pin	ﾋﾟﾝ	2				
9	21221 04100		O-ring	O-ﾘﾝｸﾞ	1				
10	03620 60001		Plug	ﾌﾟﾗｸﾞ	5				
11	03620 60002		Plug	ﾌﾟﾗｸﾞ	1				
12	03620 60003		Plug	ﾌﾟﾗｸﾞ	1				
13	21218 35601		End cover	ｴﾝﾄﾞ ｶﾊﾞｰ	1				
14	03402 15095		O-ring	O-ﾘﾝｸﾞ	1				
15	02280 10040		Socket bolt	ｿｹｯﾄ ﾎﾞﾙﾄ	2				
16	02280 10030		Socket bolt	ｿｹｯﾄ ﾎﾞﾙﾄ	9				
17	03115 40010		Spring washer	ｽﾌﾟﾘﾝｸﾞ ﾜｯｼｬ	3				
18	21218 35700		End cover	ｴﾝﾄﾞ ｶﾊﾞｰ	1				
19	22314 02101		O-ring	O-ﾘﾝｸﾞ	1				
20	21461 35500		Rotor,male	ｵｽ ﾛｰﾀ	1				
21	21462 27600		Rotor,female	ﾒｽ ﾛｰﾀ	1				
	A pair of rotor (male & female) should be ordered. / ロータは、オス・メス一対でご注文下さい								
22	21406 42400		Bearing,rotor	ﾛｰﾀ ﾍﾞｱﾘﾝｸﾞ	1				
23	21470 14000		Bearing,complete	ﾍﾞｱﾘﾝｸﾞ ｺﾝﾌﾟﾘｰﾄ	1				
24	21468 06501		Plate	ﾌﾟﾚｰﾄ	1				
25	02280 08025		Socket bolt	ｿｹｯﾄ ﾎﾞﾙﾄ	3				
26	02280 08030		Socket bolt	ｿｹｯﾄ ﾎﾞﾙﾄ	5				
27	03115 40008		Spring washer	ｽﾌﾟﾘﾝｸﾞ ﾜｯｼｬ	6				
28	03115 30008		Lock washer	ﾛｯｸ ﾜｯｼｬ	2				
29	21406 42300		Bearing,rotor	ﾛｰﾀ ﾍﾞｱﾘﾝｸﾞ	1				
30	21470 14300		Bearing,complete	ﾍﾞｱﾘﾝｸﾞ ｺﾝﾌﾟﾘｰﾄ	1				
31	21468 02700		Plate	ﾌﾟﾚｰﾄ	1				
32	02280 10030		Socket bolt	ｿｹｯﾄ ﾎﾞﾙﾄ	1				
33	03115 30010		Lock washer	ﾛｯｸ ﾜｯｼｬ	1				
	22 - 00		VALVE GROUP	ﾊﾞﾙﾌﾞ ｸﾞﾙｰﾌﾟ					
71	22100 41205		Unloader ass'y	ｱﾝﾛｰﾀﾞ	1	～0156			
	(Const.No.72～98)								
71 -1	22100 54000	A	Unloader ass'y	ｱﾝﾛｰﾀﾞ	1	0157～		M648	
	(Const.No.72～98,See page 36-1 No.15,22,23 & See page 37-1 No.31)								
72	22111 28201		Body,unloader	ｱﾝﾛｰﾀﾞ ﾎﾞﾃﾞｨ	1				
73	22115 12703		Cover,unloader	ｱﾝﾛｰﾀﾞ ｶﾊﾞｰ	1				
74	03402 10125		O-ring	O-ﾘﾝｸﾞ	1				
75	03620 60002		Plug	ﾌﾟﾗｸﾞ	2				
76	03890 20020		Nylon tube	ﾅｲﾛﾝﾁｭｰﾌﾞ	2				
77	22115 11300		Cover,unloader	ｱﾝﾛｰﾀﾞ ｶﾊﾞｰ	1				
78	02282 08025		Socket bolt	ｿｹｯﾄ ﾎﾞﾙﾄ	3				
79	03402 10070		O-ring	O-ﾘﾝｸﾞ	1				
80	22150 13801		Valve	ﾊﾞﾙﾌﾞ	1				

Go to DiscountEquipment.com to order your parts

21 - 00 AIR END

見出番号 Ref.NO.	部品番号 Part NO.	互換性 Inter-change ability	部品名称 Part Name		数量 Q'ty	適用号機範囲 Applicable Ser.No. 5E1	-	変更 C/H	備考 Remarks
81	22130 09500		Piston, unloader	ｱﾝﾛｰﾀﾞ ﾋﾟｽﾄﾝ	1				
82	21441 04800		O-ring	O-ﾘﾝｸﾞ	1				
83	21441 04900		O-ring	O-ﾘﾝｸﾞ	1				
84	22144 16700		Spring	ｽﾌﾟﾘﾝｸﾞ	1				
85	22144 16600		Spring	ｽﾌﾟﾘﾝｸﾞ	1				
86	23124 15600		Bushing	ﾌﾞｯｼﾝｸﾞ	1				
87	22144 10600		Spring	ｽﾌﾟﾘﾝｸﾞ	2				
88	36429 01600		Needle valve	ﾆｰﾄﾞﾙ ﾊﾞﾙﾌﾞ	2				
89	36428 01100		Valve seat	ﾊﾞﾙﾌﾞ ｼｰﾄ	2				
90	03402 25008		O-ring	O-ﾘﾝｸﾞ	2				
91	36623 00900		Piston, auto-relief	ﾋﾟｽﾄﾝ	2				
92	03402 25021		O-ring	O-ﾘﾝｸﾞ	2				
93	36621 01900		Cover, auto-relief	ｶﾊﾞｰ	2				
94	02270 04012		Socket bolt, w/w	ﾜｯｼｬ付ｿｹｯﾄ ﾎﾞﾙﾄ	8				
95	21221 02100		O-ring	O-ﾘﾝｸﾞ	2				
96	36349 22800		Pipe	ﾊﾟｲﾌﾟ	1				
97	03734 53021		Nipple elbow	ﾆｯﾌﾟﾙ ｴﾙﾎﾞ	2				
98	03734 65020		Nipple elbow	ﾆｯﾌﾟﾙ ｴﾙﾎﾞ	4				
99	03402 10125		O-ring	O-ﾘﾝｸﾞ	1				
100	02280 10075		Socket bolt	ｿｹｯﾄ ﾎﾞﾙﾄ	4				
101	03115 30010		Lock washer	ﾛｯｸ ﾜｯｼｬ	4				
	61 - 00		COUPLING GROUP	ｶｯﾌﾟﾘﾝｸﾞ ｸﾞﾙｰﾌﾟ					
131	21425 04801		Coupling, complete	ｶｯﾌﾟﾘﾝｸﾞ, ｺﾝﾌﾟﾘｰﾄ	1				
132	03306 14036		Key	ｷｰ	1				
133	21468 04400		Plate	ﾌﾟﾚｰﾄ	1				
134	02282 10030		Socket bolt	ｿｹｯﾄ ﾎﾞﾙﾄ	1				
135	03115 30010		Lock washer	ﾛｯｸ ﾜｯｼｬ	1				
136	02283 08020		Socket bolt	ｿｹｯﾄ ﾎﾞﾙﾄ	8				
137	03115 42008		Spring washer	ｽﾌﾟﾘﾝｸﾞ ﾜｯｼｬ	8				
138	02238 10030		Bolt, w/w	ﾜｯｼｬ付ﾎﾞﾙﾄ	8				
139	03316 08014		Pin	ﾋﾟﾝ	2				

Go to Discount-Equipment.com to order your parts

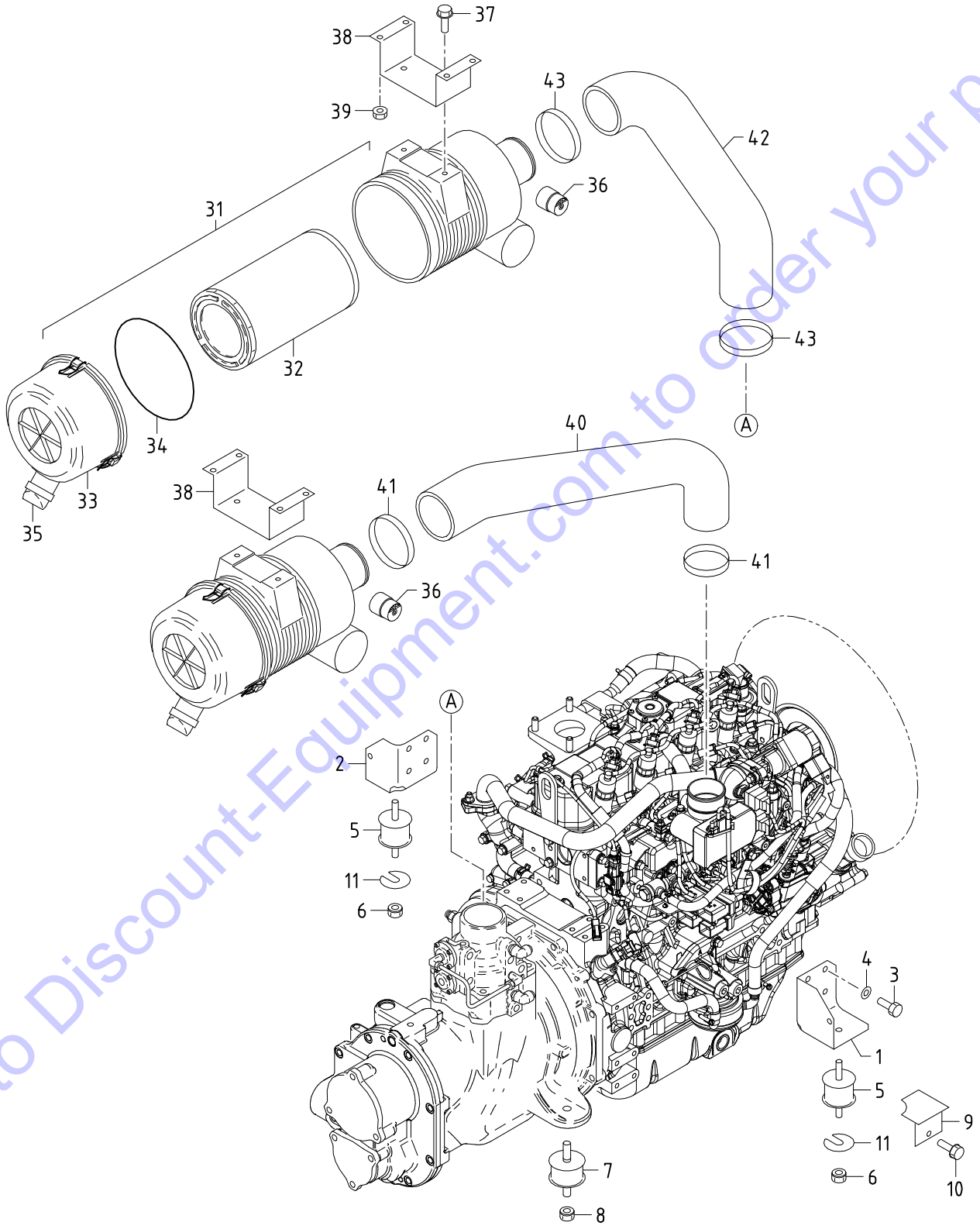

Go to Discount-Equipment.com to order your parts

見出番号 Ref.NO.	部品番号 Part NO.	互換性 Inter-change ability	部品名称 Part Name		数量 Q'ty	適用号機範囲 Applicable Ser.No. 5E1	適用号機範囲 Applicable Ser.No. -	変更 C/H	備考 Remarks
	31 - 00		MOUNTING GROUP	ﾏｳﾝﾃｨﾝｸﾞ ｸﾞﾙｰﾌﾟ					
1	31110 05710		Bracket	ﾌﾞﾗｹｯﾄ	1				
2	31110 25510		Bracket	ﾌﾞﾗｹｯﾄ	1				
3	02135 10020		Bolt	ﾎﾞﾙﾄ	8				
4	03115 02010		Spring washer	ｽﾌﾟﾘﾝｸﾞ ﾜｯｼｬ	8				
5	31130 28100		Vibration isolator ass'y	防振ｺﾞﾑ	2				
6	02915 20010		Nut,w/w	ﾜｯｼｬ付ﾅｯﾄ	4				
7	31130 20500		Vibration isolator ass'y	防振ｺﾞﾑ	2				
8	02915 20012		Nut,w/w	ﾜｯｼｬ付ﾅｯﾄ	2				
9	31110 15110		Bracket	ﾌﾞﾗｹｯﾄ	1				
10	02201 08020		Flange bolt	ﾌﾗﾝｼﾞ付ﾎﾞﾙﾄ	4				
11	31120 08900		Shim	ｼﾑ	2				
	32 - 00		INTAKE GROUP	ｲﾝﾃｰｸ ｸﾞﾙｰﾌﾟ					
31	32100 44900		Air filter ass'y	ｴｱ ﾌｨﾙﾀ	2				Const.No.32～35
32	32143 11800		Element	ｴﾚﾒﾝﾄ	2				
33	32142 11300		Cup	ｶｯﾌﾟ	2				
34	32147 03600		O-ring	O-ﾘﾝｸﾞ	2				
35	32151 01600		Vacuator valve	ﾊﾞｷｭｴｰﾀ ﾊﾞﾙﾌﾞ	2				
36	32148 03000		Filter service indicator	ｲﾝｼﾞｹｰﾀ	2				
37	02201 08012		Flange bolt	ﾌﾗﾝｼﾞ付ﾎﾞﾙﾄ	4				
38	32240 51900		Bracket	ﾌﾞﾗｹｯﾄ	2				
39	02915 00008		Hexagon flange nuts	ﾌﾗﾝｼﾞ付ﾅｯﾄ	8				
40	32331 99000		Hose	ﾎｰｽ	1				
41	03511 20090		Hose clip	ﾎｰｽ ｸﾘｯﾌﾟ	2				
42	32331 98901		Hose	ﾎｰｽ	1				
43	03511 20100		Hose clip	ﾎｰｽ ｸﾘｯﾌﾟ	2				

Go to Discount-Equipment.com to order your parts

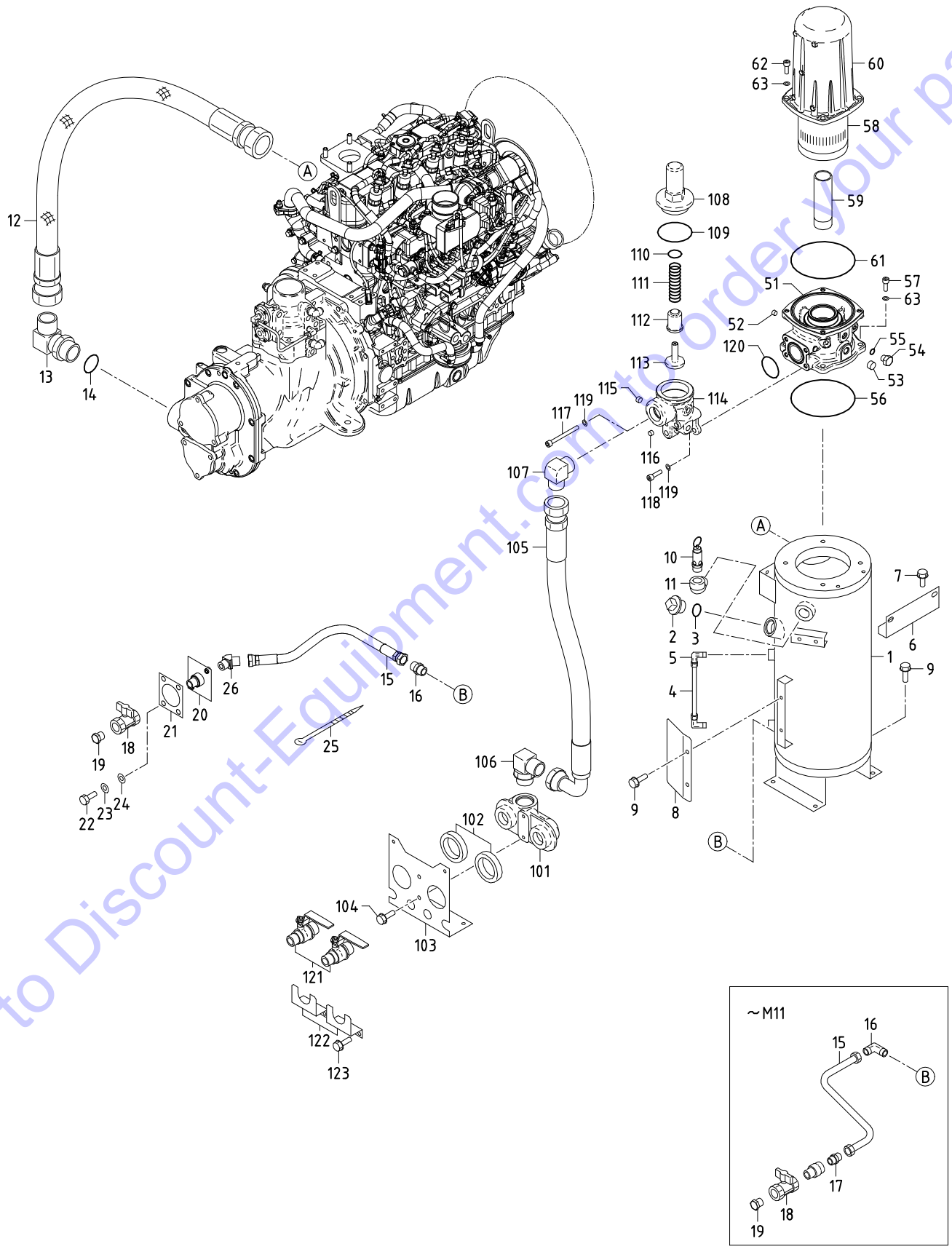

Go to Discount-Equipment.com to order your parts

33 - 00 RECEIVER, SEPARATOR & SERVICE HEADER

見出番号 Ref. NO.	部品番号 Part NO.	互換性 Inter-change ability	部品名称 Part Name		数量 Q'ty	適用号機範囲 Applicable Ser. No. 5E1	適用号機範囲 Applicable Ser. No. -	変更 C/H	備考 Remarks
	33 - 00		RECEIVER GROUP	ﾚｼｰﾊﾞ ｸﾞﾙｰﾌﾟ					
1	33100 00721		Oil separator	ｵｲﾙ ｾﾊﾟﾚｰﾀ	1	～0195			ASME
1 -1	33100 03420	B	Oil separator	ｵｲﾙ ｾﾊﾟﾚｰﾀ	1	-		M632	ASME
1 -2	33100 06820	B	Oil separator	ｵｲﾙ ｾﾊﾟﾚｰﾀ	1	0196～		M701	ASME
			(Receiver tank) (Incl. No. 2)						
2	33231 04000		Cap	ｷｬｯﾌﾟ	1				ASME
3	03402 25030		O-ring	O-ﾘﾝｸﾞ	1				
4	03841 30018		Nylon tube, w/n	ﾅｯﾄ付ﾅｲﾛﾝﾁｭｰﾌﾞ	1				
5	03734 21030		Nipple elbow	ﾆｯﾌﾟﾙ ｴﾙﾎﾞ	2				
6	33260 10400		Bracket	ﾌﾞﾗｹｯﾄ	1				
7	02201 08012		Flange bolt	ﾌﾗﾝｼﾞ付ﾎﾞﾙﾄ	4				
8	39701 04600		Plate	ﾊﾟｲﾌﾟ	2				
9	02201 08020		Flange bolt	ﾌﾗﾝｼﾞ付ﾎﾞﾙﾄ	8				
10	35200 23800		Safety valve ass'y	安全弁	1	～0130			(145PSI)
10 -1	35200 23900	B	Safety valve ass'y	安全弁	1	0131～		M 8	(150PSI)
11	37740 01400		Elbow	ｴﾙﾎﾞ	1				
12	37160 90121		Pipe	ﾊﾟｲﾌﾟ	1				
13	03734 85140		Nipple	ﾆｯﾌﾟﾙ	1				Incl. No. 14
14	03402 25044		O-ring	O-ﾘﾝｸﾞ	1				
15	38466 09800		Pipe	ﾊﾟｲﾌﾟ	1	～0143			
15 -1	37110 01900	B	Hose	ﾎｰｽ	1	～0156		M11	
15 -2	37110 07900	B	Hose	ﾎｰｽ	1	0157～		M13	
16	03734 53040		Nipple elbow	ﾆｯﾌﾟﾙ ｴﾙﾎﾞ	1	～0143			
16 -1	03734 43040	B	Nipple	ﾆｯﾌﾟﾙ	1	0144～		M11	
17	03734 52040	C	Nipple elbow	ﾆｯﾌﾟﾙ ｴﾙﾎﾞ	1	0144～		M11	
18	03735 13004		Valve	ﾊﾞﾙﾌﾞ	1				
19	33238 03000		Plug	ﾌﾟﾗｸﾞ	1				
20	37170 29600	D	Joint	ｼﾞｮｲﾝﾄ	1	0144～0156		M11	
20 -1	37170 31000	B	Joint	ｼﾞｮｲﾝﾄ	1	0157～		M13	
21	52728 61710	D	Cushion rubber	ｸｯｼｮﾝ ﾗﾊﾞｰ	1	0144～		M11	
22	02136 06025	D	Bolt	ﾎﾞﾙﾄ	2	0144～		M11	
23	03116 15006	D	Plain washer	ﾌﾟﾚｰﾝ ﾜｯｼｬ	2	0144～		M11	
24	52744 01100	D	Washer	ﾜｯｼｬ	2	0144～		M11	
25	03425 00005	D	Vinyl clip	ﾋﾞﾆｰﾙ ｸﾘｯﾌﾟ	2	0144～		M11	
26	03734 45004	D	Nipple elbow	ﾆｯﾌﾟﾙｴﾙﾎﾞ	1	0157～		M13	
	34 - 00		SEPARATOR GROUP	ｾﾊﾟﾚｰﾀ ｸﾞﾙｰﾌﾟ					
51	34210 33800		Casing, separator	ｾﾊﾟﾚｰﾀ ｹｰｼﾝｸﾞ	1				
52	03620 60001		Plug	ﾌﾟﾗｸﾞ	2				
53	03620 60003		Plug	ﾌﾟﾗｸﾞ	1				
54	33238 01800		Plug	ﾌﾟﾗｸﾞ	1				Incl. No. 55
55	03402 25011		O-ring	O-ﾘﾝｸﾞ	1				
56	03402 25145		O-ring	O-ﾘﾝｸﾞ	1				
57	02283 10030		Socket bolt	ｿｹｯﾄ ﾎﾞﾙﾄ	4				
58	34224 03000		Element	ｴﾚﾒﾝﾄ	1				
59	03729 12140		Gas pipe	ｶﾞｽ ﾊﾟｲﾌﾟ	1				
60	34250 30503		Cover, separator	ｾﾊﾟﾚｰﾀ ｶﾊﾞｰ	1				
61	03402 15145		O-ring	O-ﾘﾝｸﾞ	1				
62	02283 10035		Socket bolt	ｿｹｯﾄ ﾎﾞﾙﾄ	4				
63	03115 31010		Lock washer	ﾛｯｸ ﾜｯｼｬ	8				

Go to Discount Equipment.com to order your parts

見出番号 Ref.NO.	部品番号 Part NO.	互換性 Inter-change ability	部品名称 Part Name		数量 Q'ty	適用号機範囲 Applicable Ser.No. 5E1	-	変更 C/H	備考 Remarks
	35 - 00		SERVICE HEADER GROUP	ｻｰﾋﾞｽ ﾍｯﾀﾞ ｸﾞﾙｰﾌﾟ					
101	35100 60501		Air manifold	ｴｱ ﾏﾆﾎｰﾙﾄﾞ	1				
102	52728 57410		Cushion rubber	ｸｯｼｮﾝ ﾗﾊﾞｰ	2				
103	35410 07000		Bracket	ﾌﾞﾗｹｯﾄ	1	～0091			
103 -1	35410 07100	B	Bracket	ﾌﾞﾗｹｯﾄ	1	0092～		M 4	
104	02246 08025		Bolt,w/w	ﾜｯｼｬ付ﾎﾞﾙﾄ	4				
105	37110 03400		Hose	ﾎｰｽ	1	～0091			
105 -1	37110 18000	B	Hose	ﾎｰｽ	1	0092～		M 4	
106	03734 85120		Nipple elbow	ﾆｯﾌﾟﾙ ｴﾙﾎﾞ	1				
107	03734 44012		Nipple elbow	ﾆｯﾌﾟﾙ ｴﾙﾎﾞ	1				
108	35301 20200		Body	ﾎﾞﾃﾞｨ	1				
109	03402 15075		O-ring	O-ﾘﾝｸﾞ	1				
110	03402 25032		O-ring	O-ﾘﾝｸﾞ	1				
111	22144 07700		Spring	ｽﾌﾟﾘﾝｸﾞ	1				
112	35303 08400		Piston	ﾋﾟｽﾄﾝ	1				
113	35303 03300		Piston	ﾋﾟｽﾄﾝ	1				
114	35301 22200		Body	ﾎﾞﾃﾞｨ	1				
115	03620 60002		Plug	ﾌﾟﾗｸﾞ	3				
116	03620 60001		Plug	ﾌﾟﾗｸﾞ	1				
117	02283 10090		Socket bolt	ｿｹｯﾄ ﾎﾞﾙﾄ	2				
118	02283 10030		Socket bolt	ｿｹｯﾄ ﾎﾞﾙﾄ	2				
119	03115 31010		Lock washer	ﾛｯｸ ﾜｯｼｬ	4				
120	03402 15050		O-ring	O-ﾘﾝｸﾞ	1				
121	35421 00105		Air valve	ｴｱ ﾊﾞﾙﾌﾞ	2				
122	35470 54200		Bracket	ﾌﾞﾗｹｯﾄ	2				
123	02246 06016		Bolt,w/w	ﾜｯｼｬ付ﾎﾞﾙﾄ	4				

Go to Discount-Equipment.com to order your parts

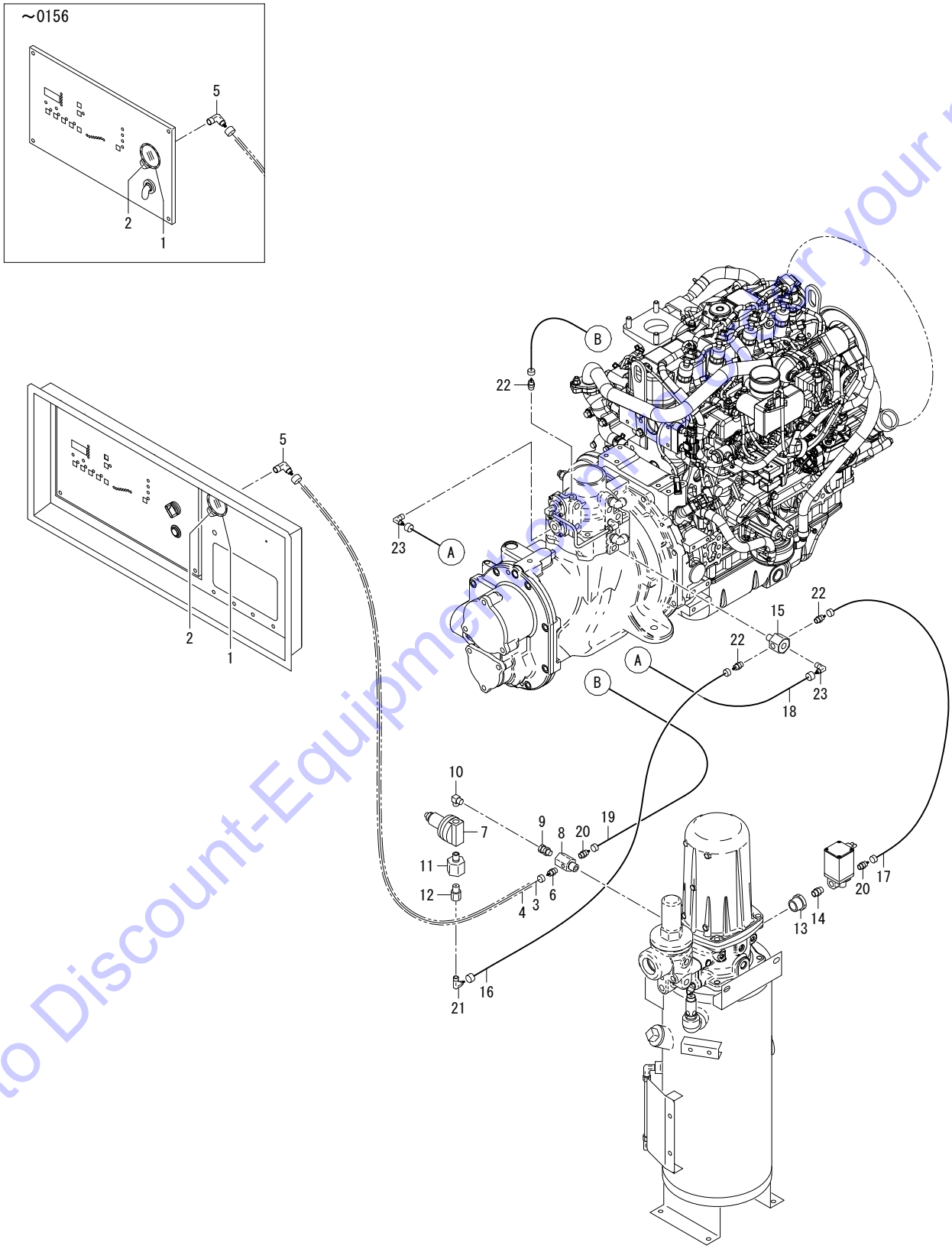

Go to Discount-Equipment.com for your parts

見出番号 Ref.NO.	部品番号 Part NO.	互換性 Inter-change ability	部品名称 Part Name		数量 Q'ty	適用号機範囲 Applicable Ser.No. 5E1	適用号機範囲 Applicable Ser.No. -	変更 C/H	備考 Remarks
	36 - 00		CONTROL GROUP	ｺﾝﾄﾛｰﾙ ｸﾞﾙｰﾌﾟ					
1	36141 18600		Gauge, air press.	圧力計	1				(PSI)
2	36131 03100		Cushion rubber	ｸｯｼｮﾝ ﾗﾊﾞｰ	1				
3	03840 15105		Nylon tube, w/n	ﾅｯﾄ付ﾅｲﾛﾝﾁｭｰﾌﾞ	1	～0156			
3 -1	03840 15080	B	Nylon tube, w/n	ﾅｯﾄ付ﾅｲﾛﾝﾁｭｰﾌﾞ	1	0157～		M14	
4	06540 07095		Corrugated tube	ｺﾙｹﾞｰﾄ ﾁｭｰﾌﾞ	1	～0156			
4 -1	06540 07070	B	Corrugated tube	ｺﾙｹﾞｰﾄ ﾁｭｰﾌﾞ	1	0157～		M14	
5	03734 21151		Nipple elbow	ﾆｯﾌﾟﾙ ｴﾙﾎﾞ	1				
6	03734 20015		Nipple	ﾆｯﾌﾟﾙ	1				
7	36400 19000		Regulator ass'y	ﾚｷﾞｭﾚｰﾀ	1				
8	37189 38500		Bushing	ﾌﾞｯｼﾝｸﾞ	1				
9	86183 01500		Joint	ｼﾞｮｲﾝﾄ	1				
10	03734 44002		Nipple elbow	ﾆｯﾌﾟﾙ ｴﾙﾎﾞ	1				
11	37189 33500		Bushing	ﾌﾞｯｼﾝｸﾞ	1				
12	37189 08100		Bushing	ﾌﾞｯｼﾝｸﾞ	1				
13	03732 00602		Bush	ﾌﾞｯｼｭ	1				
14	03731 44002		Nipple	ﾆｯﾌﾟﾙ	1				
15	37189 39400		Bushing	ﾌﾞｯｼﾝｸﾞ	1				
16	03840 20030		Nylon tube, w/n	ﾅｯﾄ付ﾅｲﾛﾝﾁｭｰﾌﾞ	1				
17	03840 20044		Nylon tube, w/n	ﾅｯﾄ付ﾅｲﾛﾝﾁｭｰﾌﾞ	1				
18	03840 20021		Nylon tube, w/n	ﾅｯﾄ付ﾅｲﾛﾝﾁｭｰﾌﾞ	1				
19	03840 20029		Nylon tube, w/n	ﾅｯﾄ付ﾅｲﾛﾝﾁｭｰﾌﾞ	1				
20	03734 20020		Nipple	ﾆｯﾌﾟﾙ	2				
21	03734 21020		Nipple elbow	ﾆｯﾌﾟﾙ ｴﾙﾎﾞ	1				
22	03734 20020		Nipple	ﾆｯﾌﾟﾙ	3				
23	03734 21020		Nipple elbow	ﾆｯﾌﾟﾙ ｴﾙﾎﾞ	2				

Go to Discount-Equipment.com to order your parts

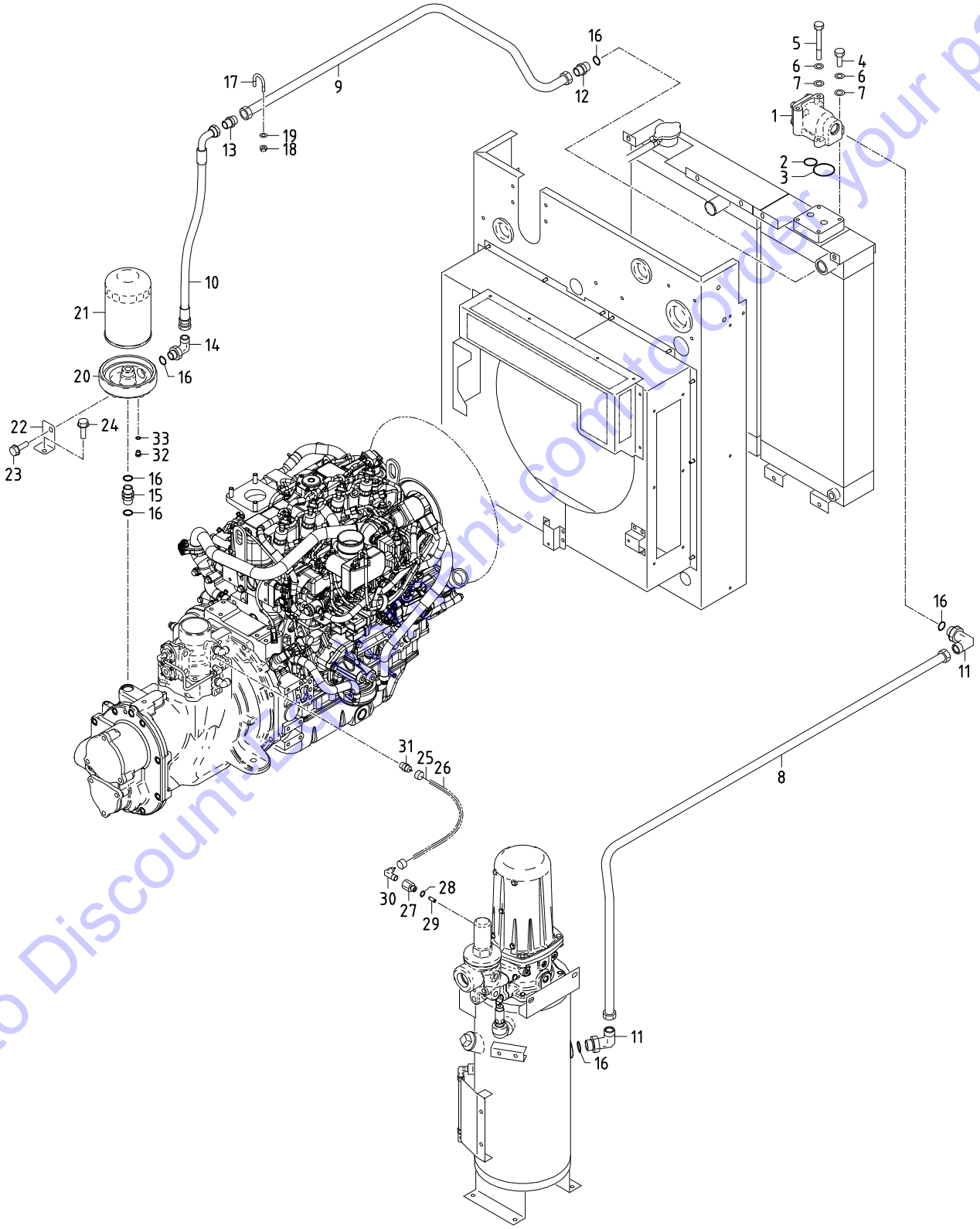

Go to Discount-Equipment.com to order your parts

37 - 00 OIL LINE

見出番号 Ref.NO.	部品番号 Part NO.	互換性 Inter-change ability	部品名称 Part Name		数量 Q'ty	適用号機範囲 Applicable Ser.No. 5E1	適用号機範囲 Applicable Ser.No. -	変更 C/H	備考 Remarks
	37 - 00		OIL LINE GROUP	ｵｲﾙ ﾗｲﾝ ｸﾞﾙｰﾌﾟ					
1	37200 11502		By-pass valve ass'y	ﾊﾞｲﾊﾟｽ ﾊﾞﾙﾌﾞ	1				Incl.Pellet &
	37231 02100		Pellet ass'y	ﾍﾟﾚｯﾄ	1				O-ring
	03402 25045		O-ring	O-ﾘﾝｸﾞ	1				
2	03402 15025		O-ring	O-ﾘﾝｸﾞ	1				
3	03402 15045		O-ring	O-ﾘﾝｸﾞ	1				
4	02136 08035		Bolt	ﾎﾞﾙﾄ	2				
5	02136 08090		Bolt	ﾎﾞﾙﾄ	2				
6	03115 06008		Spring washer	ｽﾌﾟﾘﾝｸﾞ ﾜｯｼｬ	4				
7	03116 15008		Plain washer	ﾌﾟﾚｰﾝ ﾜｯｼｬ	4				
8	37111 29900		Pipe	ﾊﾟｲﾌﾟ	1				
9	37145 04700		Pipe	ﾊﾟｲﾌﾟ	1				
10	37110 17400		Hose	ﾎｰｽ	1	～0156			
10 -1	37110 18900	A	Hose	ﾎｰｽ	1	0157～		M12	
11	03734 76060		Nipple	ﾆｯﾌﾟﾙ	2				Incl.No.16
12	03734 75060		Nipple	ﾆｯﾌﾟﾙ	1				Incl.No.16
13	37731 11300		Nipple	ﾆｯﾌﾟﾙ	1				
14	03734 85060		Nipple	ﾆｯﾌﾟﾙ	1				Incl.No.16
15	37731 06400		Nipple	ﾆｯﾌﾟﾙ	1				Incl.No.16
16	03402 25024		O-ring	O-ﾘﾝｸﾞ	6				
17	03830 06007		U-bolt	U-ﾎﾞﾙﾄ	1				
18	02915 20006		Nut,w/w	ﾜｯｼｬ付ﾅｯﾄ	2				
19	03116 12006		Plain washer	ﾌﾟﾚｰﾝ ﾜｯｼｬ	2				
20	37411 07501		Body	ﾎﾞﾃﾞｨ	1	～0130			
20 -1	37411 08100	B	Body	ﾎﾞﾃﾞｨ	1	0131～		M579	
21	37438 08900		Filter cartride	ﾌｨﾙﾀ ｶｰﾄﾘｯｼﾞ	1				
22	37510 38700		Bracket	ﾌﾞﾗｹｯﾄ	1				
23	02201 08012		Flange bolt	ﾌﾗﾝｼﾞ付ﾎﾞﾙﾄ	1				
24	02201 10020		Flange bolt	ﾌﾗﾝｼﾞ付ﾎﾞﾙﾄ	1				
25	03847 20048		Nylon tube,w/n	ﾅｯﾄ付ﾅｲﾛﾝﾁｭｰﾌﾞ	1				
26	06540 07038		Corrugated tube	ｺﾙｹﾞｰﾄ ﾁｭｰﾌﾞ	1				
27	37189 36600		Bushing	ﾌﾞｯｼﾝｸﾞ	1				
28	03402 25011		O-ring	O-ﾘﾝｸﾞ	1				
29	37580 01900		Strainer	ｽﾄﾚｰﾅ	1				
30	03734 21020		Nipple elbow	ﾆｯﾌﾟﾙ ｴﾙﾎﾞ	1				
31	03734 20020		Nipple	ﾆｯﾌﾟﾙ	1				
32	33238 03700	D	Plug	ﾌﾟﾗｸﾞ	1	0131～		M579	Incl.No.33
33	03402 25008	D	O-ring	O-ﾘﾝｸﾞ	1	0131～		M579	

Go to Discount-Equipment.com to order your parts

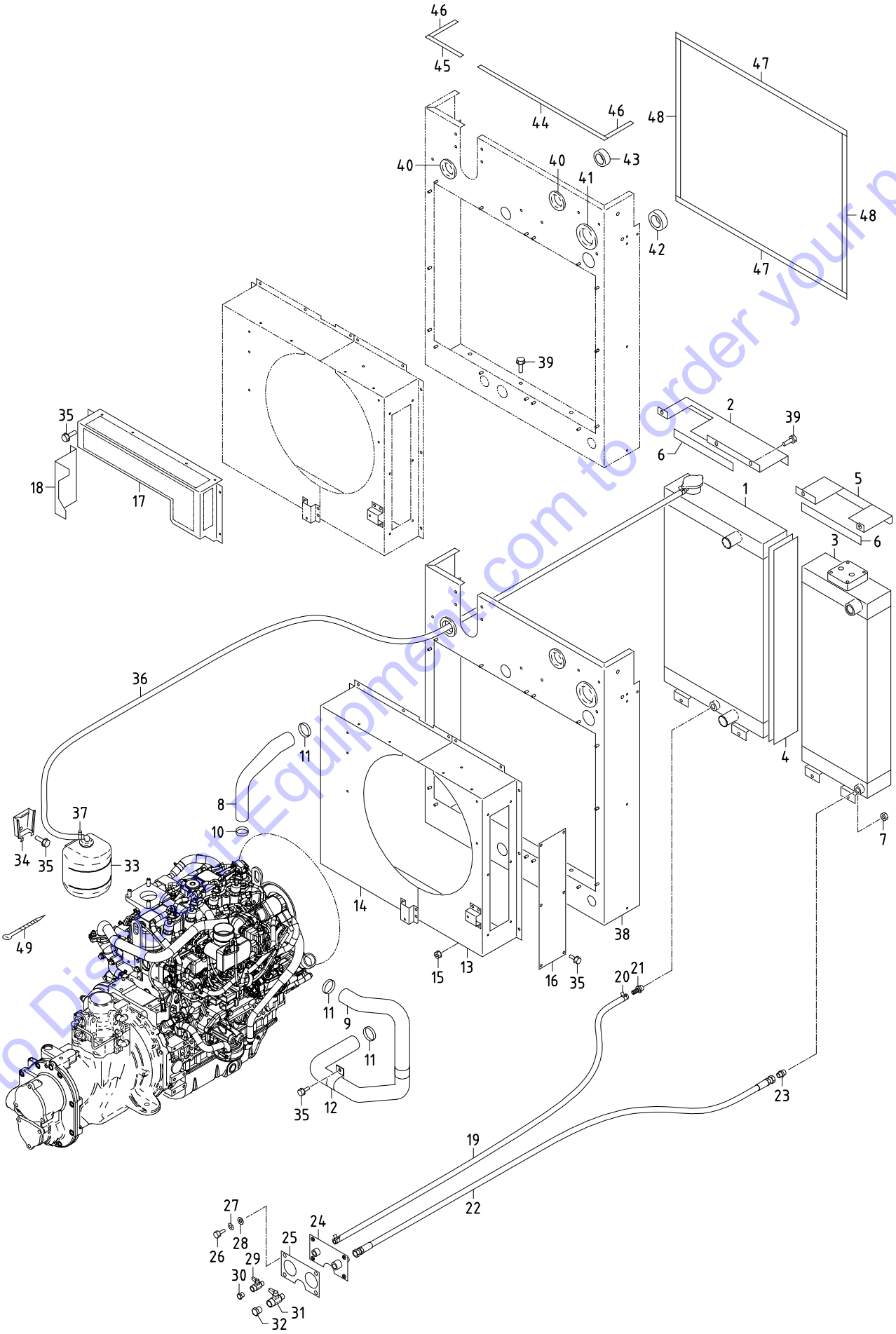

Go to Discount-Equipment.com to order your parts

見出番号 Ref.NO.	部品番号 Part NO.	互換性 Inter-change ability	部品名称 Part Name		数量 Q'ty	適用号機範囲 Applicable Ser.No. 5E1	適用号機範囲 Applicable Ser.No. -	変更 C/H	備考 Remarks
	38 - 00		COOLING GROUP	ｸｰﾘﾝｸﾞ ｸﾞﾙｰﾌﾟ					
1	38100 47900		Radiator	ﾗｼﾞｴｰﾀ	1				(90kPa)
2	38420 10311		Bracket	ﾌﾞﾗｹｯﾄ	1				
3	38200 49800		Oil cooler	ｵｲﾙ ｸｰﾗ	1				
4	52728 63110		Cushion rubber	ｸｯｼｮﾝ ﾗﾊﾞｰ	2	～0053			
4 -1	52728 63111	A	Cushion rubber	ｸｯｼｮﾝ ﾗﾊﾞｰ	1	0054～		M 2	
5	38420 09711		Bracket	ﾌﾞﾗｹｯﾄ	1				
6	03407 64632		Seal rubber	ｼｰﾙ ﾗﾊﾞｰ	2				
7	02915 00008		Hexagon flange nuts	ﾌﾗﾝｼﾞ付ﾅｯﾄ	4				
8	38524 80101		Hose	ﾎｰｽ	1				(upper)
9	38524 80001		Hose	ﾎｰｽ	1				(lower)
10	03511 20040		Hose clip	ﾎｰｽ ｸﾘｯﾌﾟ	1				
11	03511 20045		Hose clip	ﾎｰｽ ｸﾘｯﾌﾟ	3				
12	03424 80069		Clip	ｸﾘｯﾌﾟ	2				
13	38440 24010		Shroud,fan	ﾌｧﾝ ｼｭﾗｳﾄﾞ	1				
14	38440 24110		Shroud,fan	ﾌｧﾝ ｼｭﾗｳﾄﾞ	1				
15	02915 00006		Hexagon flange nuts	ﾌﾗﾝｼﾞ付ﾅｯﾄ	16				
16	38441 41110		Plate	ﾌﾟﾚｰﾄ	2				
17	38450 07410		Guard,fan	ﾌｧﾝ ｶﾞｰﾄﾞ	1				
18	38450 07510		Guard,fan	ﾌｧﾝ ｶﾞｰﾄﾞ	1				
19	03570 08157		Hose	ﾎｰｽ	1				
20	03511 20016		Hose clip	ﾎｰｽ ｸﾘｯﾌﾟ	2	～0156			
20 -1	03511 40021	A	Hose clip	ﾎｰｽ ｸﾘｯﾌﾟ	2	0157～		M620	
21	37170 12200		Joint	ｼﾞｮｲﾝﾄ	1				
22	37110 17300		Hose	ﾎｰｽ	1				
23	03734 43030		Nipple	ﾆｯﾌﾟﾙ	1				
24	37170 29500		Joint	ｼﾞｮｲﾝﾄ	1				
25	52728 61810		Cushion rubber	ｸｯｼｮﾝ ﾗﾊﾞｰ	1				
26	02136 06025		Bolt	ﾎﾞﾙﾄ	5				
27	03116 15006		Plain washer	ﾌﾟﾚｰﾝ ﾜｯｼｬ	5				
28	52744 01100		Washer	ﾜｯｼｬ	5				
29	35421 06900		Air valve	ｴｱ ﾊﾞﾙﾌﾞ	1				
30	33238 02700		Plug	ﾌﾟﾗｸﾞ	1				
31	35421 06800		Air valve	ｴｱ ﾊﾞﾙﾌﾞ	1				
32	33238 02800		Plug	ﾌﾟﾗｸﾞ	1				
33	38590 01400		Reserve tank ass'y	ﾘｻﾞｰﾌﾞ ﾀﾝｸ	1				
34	38591 00400		Bracket	ﾌﾞﾗｹｯﾄ	1				
35	02201 06016		Flange bolt	ﾌﾗﾝｼﾞ付ﾎﾞﾙﾄ	25				
36	38594 02400		Hose	ﾎｰｽ	1				
37	03511 40016		Hose clip	ﾎｰｽ ｸﾘｯﾌﾟ	2				
38	52350 52030		Cover	ｶﾊﾞｰ	1				
39	02201 08020		Flange bolt	ﾌﾗﾝｼﾞ付ﾎﾞﾙﾄ	6				
40	03403 00512		Grommet	ｸﾞﾛﾒｯﾄ	2				
41	03403 00703		Grommet	ｸﾞﾛﾒｯﾄ	1				
42	52728 62910		Cushion rubber	ｸｯｼｮﾝ ﾗﾊﾞｰ	1				
43	52728 63010		Cushion rubber	ｸｯｼｮﾝ ﾗﾊﾞｰ	1				
44	03407 66811		Seal rubber	ｼｰﾙ ﾗﾊﾞｰ	1				
45	03407 66861		Seal rubber	ｼｰﾙ ﾗﾊﾞｰ	1				
46	03407 66871		Seal rubber	ｼｰﾙ ﾗﾊﾞｰ	2				
47	03407 67415		Seal rubber	ｼｰﾙ ﾗﾊﾞｰ	2				
48	03407 67401		Seal rubber	ｼｰﾙ ﾗﾊﾞｰ	2				
49	03425 00001		Clip	ｸﾘｯﾌﾟ	10				

Go to DiscountEquipment.com to order your parts

39 - 00 NAME PLATE

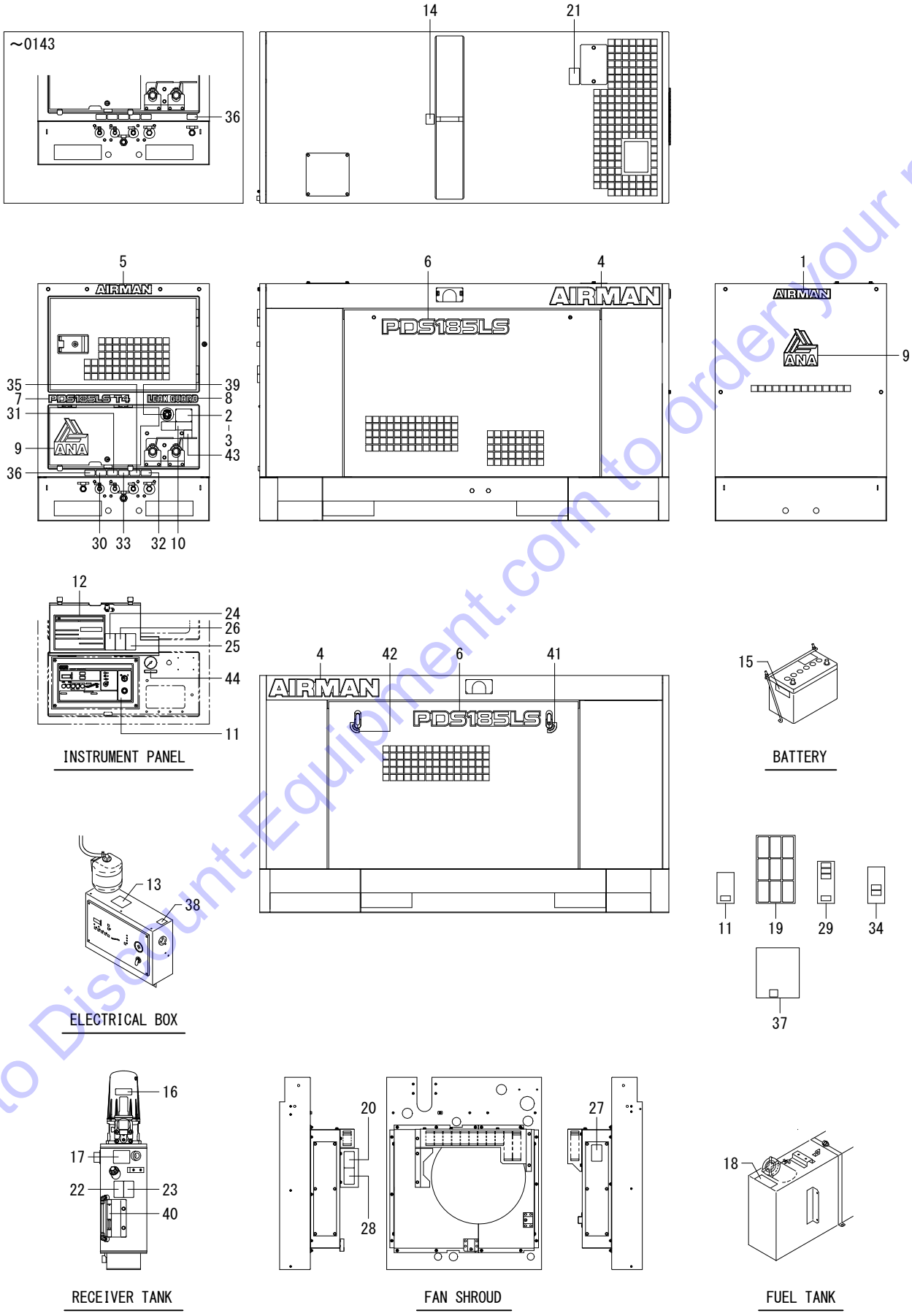

Go to Discount-Equipment.com to order your parts

39 - 00 NAME PLATE

見出番号 Ref.NO.	部品番号 Part NO.	互換性 Inter-change ability	部品名称 Part Name		数量 Q'ty	適用号機範囲 Applicable Ser.No. 5E1	適用号機範囲 Applicable Ser.No. -	変更 C/H	備考 Remarks
	39 - 00		ACCESSORY GROUP	ｱｸｾｻﾘ ｸﾞﾙｰﾌﾟ					
	39600 51641		Instruction manual	取扱説明書		～0156			
	39600 57150	B	Instruction manual	取扱説明書		0157～		M14	
1	39170 02000		Mark (AIRMAN)	ﾏｰｸ	1				
2	39103 10811		Plate(SER.NO.)	ﾌﾟﾚｰﾄ	1				
3	03260 03010		Blind rivet	ﾘﾍﾞｯﾄ	4				
4	39178 23930		Plate(AIRMAN)	ﾌﾟﾚｰﾄ	2				
5	39178 06840		Plate(AIRMAN)	ﾌﾟﾚｰﾄ	1				
6	39178 02950		Plate(PDS185LS)	ﾌﾟﾚｰﾄ	2				
7	39178 04150		Plate(PDS185LS T4)	ﾌﾟﾚｰﾄ	2				
8	39178 05250		Plate(LEAK GUARD)	ﾌﾟﾚｰﾄ	1				
9	39178 93240		Plate(mark)	ﾌﾟﾚｰﾄ	2				
10	39178 67840		Plate(california)	ﾌﾟﾚｰﾄ	1				
11	39178 03050		Plate(in-pane)	ﾌﾟﾚｰﾄ	1	～0156			
11 -1	39178 67851	B	Plate(in-pane)	ﾌﾟﾚｰﾄ	1	0157～		M14	
12	39153 70500		Plate(start-stop)	ﾌﾟﾚｰﾄ	1	～0156			
12 -1	39153 78900	B	Plate(start-stop)	ﾌﾟﾚｰﾄ	1	0157～		M14	
13	39178 00310		Plate(LLC)	ﾌﾟﾚｰﾄ	1				
14	39176 69300		Plate(lift position)	ﾌﾟﾚｰﾄ	1				
15	39176 50000		Plate(danger,battery)	ﾌﾟﾚｰﾄ	1				
16	39176 07510		Plate(strainer)	ﾌﾟﾚｰﾄ	1				
17	39179 01700		Plate(genuine oil)	ﾌﾟﾚｰﾄ	1				
18	39178 22031		Plate(FLAMMABLES)	ﾌﾟﾚｰﾄ	1				
19	39173 04200		Plate,complete	ﾌﾟﾚｰﾄ(1ｾｯﾄ)	1				Const.No.20～28
20	* * *	Z	Plate	ﾌﾟﾚｰﾄ	1				(39173 04200)
			(caution,high temp.)						
21	* * *	Z	Plate	ﾌﾟﾚｰﾄ	1				(39173 04200)
			(caution,radiator cap)						
22	* * *	Z	Plate(caution,fire)	ﾌﾟﾚｰﾄ	1				(39173 04200)
23	* * *	Z	Plate	ﾌﾟﾚｰﾄ	1				(39173 04200)
			(warning,compressed air)						
24	* * *	Z	Plate	ﾌﾟﾚｰﾄ	1				(39173 04200)
			(warning,exhaust gases)						
25	* * *	Z	Plate	ﾌﾟﾚｰﾄ	1				(39173 04200)
			(warning,compressed air)						
26	* * *	Z	Plate	ﾌﾟﾚｰﾄ	1				(39173 04200)
			(danger,compressed air)						
27	* * *	Z	Plate	ﾌﾟﾚｰﾄ	1				(39173 04200)
			(warning,cooling fan)						
28	* * *	Z	Plate(warning,V-belt)	ﾌﾟﾚｰﾄ	1				(39173 04200)
29	39173 03300		Plate,complete	ﾌﾟﾚｰﾄ(1ｾｯﾄ)	1				Const.No.30～33
30	* * *	Z	Plate(fuel drain)	ﾌﾟﾚｰﾄ	1				(39173 03300)
31	* * *	Z	Plate(radiator drain)	ﾌﾟﾚｰﾄ	1				(39173 03300)
32	* * *	Z	Plate(eng.oil drain)	ﾌﾟﾚｰﾄ	1				(39173 03300)
33	* * *	Z	Plate(oil fence drain)	ﾌﾟﾚｰﾄ	1				(39173 03300)
34	39173 03400		Plate,complete	ﾌﾟﾚｰﾄ(1ｾｯﾄ)	1				Const.No.35～36
35	* * *	Z	Plate(oil cooler drain	ﾌﾟﾚｰﾄ	1				(39173 03400)
36	* * *	Z	Plate(receivor tank drain	ﾌﾟﾚｰﾄ	1				(39173 03400)
37	39176 92600		Plate,complete	ﾌﾟﾚｰﾄ(1ｾｯﾄ)	1				Const.No.38
38	* * *	Z	Plate(refueling drain)	ﾌﾟﾚｰﾄ	1				(39173 92600)

Go to Discount-Equipment.com to order your parts

39 - 00 NAME PLATE

見出番号 Ref.NO.	部品番号 Part NO.	互換性 Inter-change ability	部品名称 Part Name	数量 Q'ty	適用号機範囲 Applicable Ser.No. 5E1	-	変更 C/H	備考 Remarks
39	39178 47611		Plate(EMERGENCY STOP) ﾌﾟﾚｰﾄ	1				
40	39178 20450		Plate(oil level gauge) ﾌﾟﾚｰﾄ	1				
41	39178 59540		Plate(OPEN-CLOSE) ﾌﾟﾚｰﾄ	1				
42	39178 59640		Plate(OPEN-CLOSE) ﾌﾟﾚｰﾄ	1				
43	39178 38151	D	Plate(QR CODE) ﾌﾟﾚｰﾄ	1	0157～		M625	
44	39178 62751	D	Plate(air pressure) ﾌﾟﾚｰﾄ	1	0157～		M14	

Go to Discount-Equipment.com to order your parts

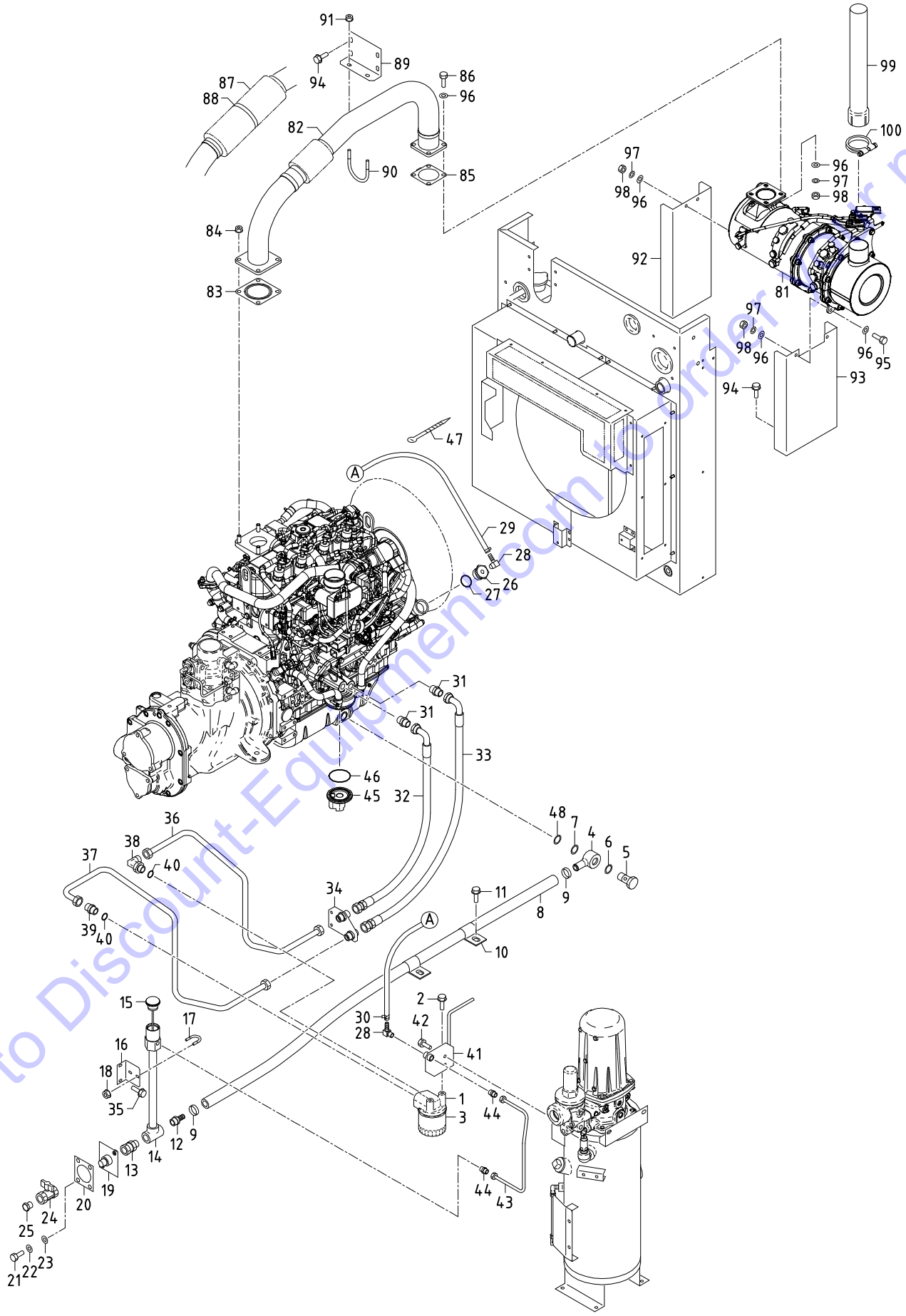

Go to Discount-Equipment.com to order parts

見出番号 Ref.NO.	部品番号 Part NO.	互換性 Inter-change ability	部品名称 Part Name		数量 Q'ty	適用号機範囲 Applicable Ser.No. 5E1	適用号機範囲 Applicable Ser.No. -	変更 C/H	備考 Remarks
	41 - 00		ENGINE GROUP	ｴﾝｼﾞﾝ ｸﾞﾙｰﾌﾟ					
1	37411 07300		Body	ﾎﾞﾃﾞｨ	1				
2	02201 08012		Flange bolt	ﾌﾗﾝｼﾞ付ﾎﾞﾙﾄ	2				
3	41290 01200		Filter ass'y	ｴﾝｼﾞﾝｵｲﾙﾌｨﾙﾀｰ	1				See Engine parts Fig.10.
4	43534 01702		Ring connector	ﾘﾝｸﾞ ｺﾈｸﾀ	1				(Nipple)
5	43532 05201		Nipple	ﾆｯﾌﾟﾙ	1	～0156			(Bolt)
5 -1	43532 10200	A	Nipple	ﾆｯﾌﾟﾙ	1	0157～		M626	
6	03407 16022		Gasket	ｶﾞｽｹｯﾄ	1				
7	41330 00700		Gasket	ｶﾞｽｹｯﾄ	1				
8	03580 19090		Hose	ﾎｰｽ	1				
9	03511 20035		Hose clip	ﾎｰｽ ｸﾘｯﾌﾟ	2				
10	37181 07100		Clip	ｸﾘｯﾌﾟ	2				
11	02201 06016		Flange bolt	ﾌﾗﾝｼﾞ付ﾎﾞﾙﾄ	2				
	02915 00006	D	Hexagon flange nuts	ﾌﾗﾝｼﾞ付ﾅｯﾄ	2	0131～		M10	
12	37170 02900		Joint	ｼﾞｮｲﾝﾄ	1				
13	86183 01900		Joint	ｼﾞｮｲﾝﾄ	2				
14	37160 87220		Pipe	ﾊﾟｲﾌﾟ	1				
15	33200 05200		Gauge ass'y	ｴﾝｼﾞﾝｵｲﾙﾚﾍﾞﾙｹﾞｰｼﾞ	1				
16	41250 06800		Bracket	ﾌﾞﾗｹｯﾄ	1				
17	03830 06007		U-bolt	U-ﾎﾞﾙﾄ	1				
18	02915 20006		Nut,w/w	ﾜｯｼｬ付ﾅｯﾄ	2				
19	37170 29600		Joint	ｼﾞｮｲﾝﾄ	1				
20	52728 61710		Cushion rubber	ｸｯｼｮﾝ ﾗﾊﾞｰ	1				
21	02136 06025		Bolt	ﾎﾞﾙﾄ	2				
22	03116 15006		Plain washer	ﾌﾟﾚｰﾝ ﾜｯｼｬ	2				
23	52744 01100		Washer	ﾜｯｼｬ	2				
24	03735 13004		Valve	ﾊﾞﾙﾌﾞ	1				
25	33238 03000		Plug	ﾌﾟﾗｸﾞ	1				
26	37731 16100		Nipple	ﾆｯﾌﾟﾙ	1				
27	03402 25028		O-ring	O-ﾘﾝｸﾞ	1				
28	37170 29700		Joint	ｼﾞｮｲﾝﾄ	2				
29	03570 08143		Hose	ﾎｰｽ	1				
30	03511 20016		Hose clip	ﾎｰｽ ｸﾘｯﾌﾟ	2				
31	03734 43040		Nipple	ﾆｯﾌﾟﾙ	2				
32	37110 17500		Hose	ﾎｰｽ	1	～0156			
32 -1	37110 19000	A	Hose	ﾎｰｽ	1	0157～		M12	
33	37110 17600		Hose	ﾎｰｽ	1	～0156			
33 -1	37110 19100	A	Hose	ﾎｰｽ	1	0157～		M12	
34	37170 28600		Joint	ｼﾞｮｲﾝﾄ	1				
35	02201 06016		Flange bolt	ﾌﾗﾝｼﾞ付ﾎﾞﾙﾄ	4				
36	37160 87020		Pipe	ﾊﾟｲﾌﾟ	1				
37	37160 87120		Pipe	ﾊﾟｲﾌﾟ	1				
38	03734 76040		Nipple elbow	ﾆｯﾌﾟﾙ ｴﾙﾎﾞ	1				Incl. No.40
39	03734 75040		Nipple	ﾆｯﾌﾟﾙ	1				Incl. No.40
40	03402 25018		O-ring	O-ﾘﾝｸﾞ	2				
41	41250 07100		Bracket	ﾌﾞﾗｹｯﾄ	1				
42	02201 08020		Flange bolt	ﾌﾗﾝｼﾞ付ﾎﾞﾙﾄ	2				
43	37160 89520		Pipe	ﾊﾟｲﾌﾟ	1				
44	03734 52022		Nipple	ﾆｯﾌﾟﾙ	2				

Go to DiscountEquipment.com to order your parts

41 - 00 ENGINE & EXHAUST

見出番号 Ref.NO.	部品番号 Part NO.	互換性 Inter-change ability	部品名称 Part Name		数量 Q'ty	適用号機範囲 Applicable Ser.No. 5E1	-	変更 C/H	備考 Remarks
45	33238 03500		Plug	ﾌﾟﾗｸﾞ	1				See Engine parts Fig.19.
46	21221 06800		O-ring	O-ﾘﾝｸﾞ	1				See Engine parts Fig.19.
47	03425 00001		Vinyl clip	ﾋﾞﾆｰﾙ ｸﾘｯﾌﾟ	5				
48	41330 01000	D	Gasket	ｶﾞｽｹｯﾄ	1	0157～		M626	
	42 - 00		EXHAUST GROUP	ｴｷｿﾞｰｽﾄ ｸﾞﾙｰﾌﾟ					
81	42180 00200		Exhaust filter	ｴｷｿﾞｰｽﾄ ﾌｨﾙﾀ	1				See Engine parts Fig.7.
82	42310 04110		Pipe,exhaust	ｴｷｿﾞｰｽﾄ ﾊﾟｲﾌﾟ	1				
83	42324 16200		Gasket	ｶﾞｽｹｯﾄ	1				See Engine parts Fig.19.
84	02915 01010		Hexagon flange nuts	ﾌﾗﾝｼﾞ付ﾅｯﾄ	4				
85	42324 14900		Gasket	ｶﾞｽｹｯﾄ	1				See Engine parts Fig.7.
86	02135 08035		Bolt	ﾎﾞﾙﾄ	4				
87	42410 03600		Insulating cover	断熱ｶﾊﾞｰ	1				
88	03511 30125		Hose clip	ﾎｰｽ ｸﾘｯﾌﾟ	3				
89	42240 39700		Bracket	ﾌﾞﾗｹｯﾄ	1				
90	03830 08009		U-bolt	U-ﾎﾞﾙﾄ	1				
91	02915 00008		Hexagon flange nuts	ﾌﾗﾝｼﾞ付ﾅｯﾄ	2				
92	42240 31700		Bracket	ﾌﾞﾗｹｯﾄ	1				
93	42240 31800		Bracket	ﾌﾞﾗｹｯﾄ	1				
94	02201 08020		Flange bolt	ﾌﾗﾝｼﾞ付ﾎﾞﾙﾄ	8				
95	02136 08030		Bolt	ﾎﾞﾙﾄ	2				
96	03116 15008		Plain washer	ﾌﾟﾚｰﾝ ﾜｯｼｬ	8				
97	03115 06008		Spring washer	ｽﾌﾟﾘﾝｸﾞ ﾜｯｼｬ	8				
98	02912 06008		Nut	ﾅｯﾄ	10				
99	42310 16410		Pipe,exhaust	ﾃｰﾙ ﾊﾟｲﾌﾟ	1				
100	42230 20900		Belt	ﾍﾞﾙﾄ	1				See Engine parts Fig.19.

Go to Discount-Equipment.com to order your parts

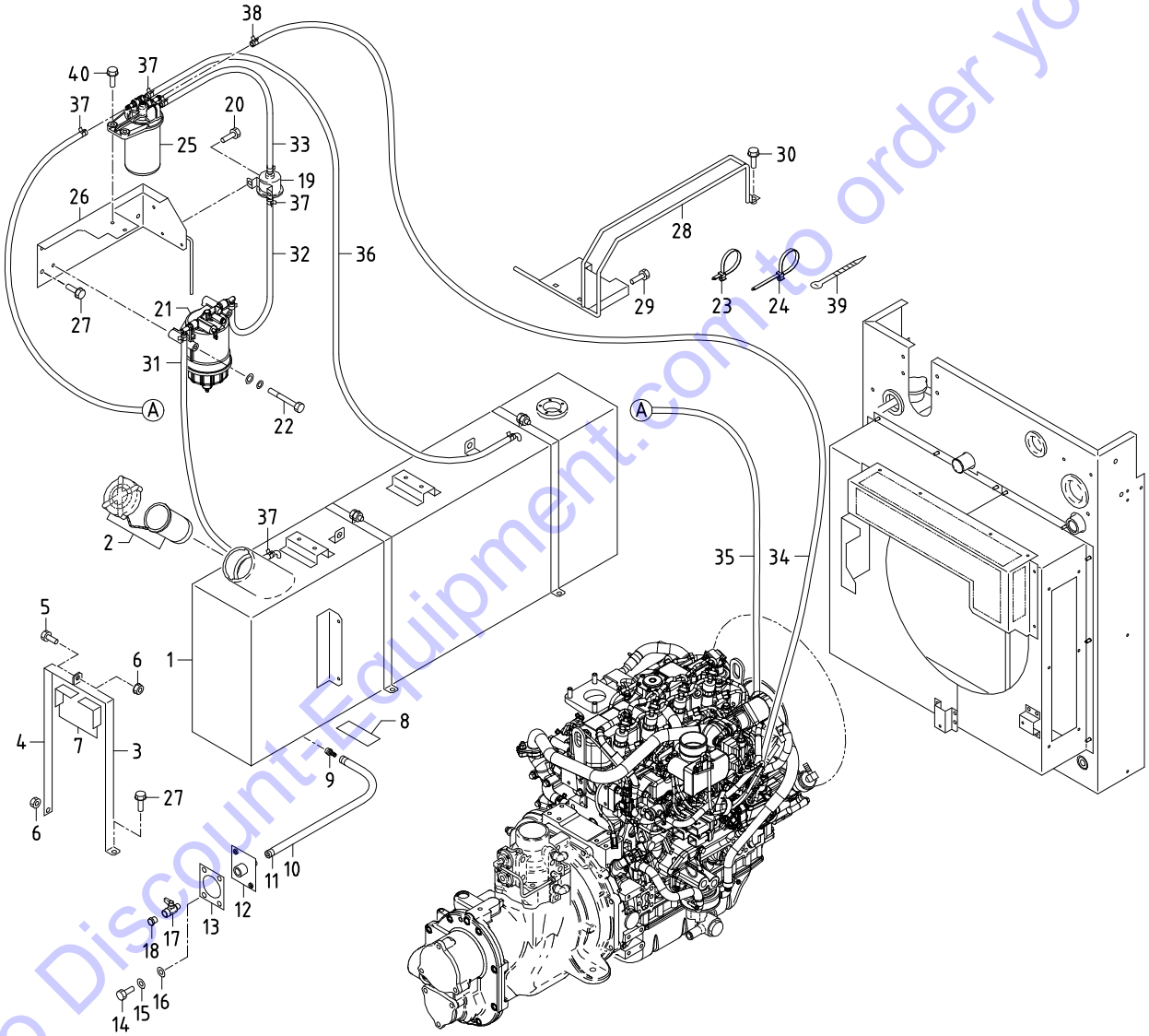

Go to Discount-Equipment.com to order your parts

見出番号 Ref.NO.	部品番号 Part NO.	互換性 Inter-change ability	部品名称 Part Name		数量 Q'ty	適用号機範囲 Applicable Ser.No. 5E1	適用号機範囲 Applicable Ser.No. -	変更 C/H	備考 Remarks
	43 - 00		FUEL GROUP	ﾌｭｴﾙ ｸﾞﾙｰﾌﾟ					
1	43100 02613		Fuel tank	ﾌｭｴﾙ ﾀﾝｸ	1				
2	43220 03400		Cap	ｷｬｯﾌﾟ	1				Incl.Strainer
3	43310 42000		Belt	ﾍﾞﾙﾄ	2				
4	02201 42700		Belt	ﾍﾞﾙﾄ	2				
5	02246 08025		Bolt,w/w	ﾜｯｼｬ付ﾎﾞﾙﾄ	2				
6	02915 00008		Hexagon flange nuts	ﾌﾗﾝｼﾞ付ﾅｯﾄ	4				
7	38465 23500		Cushion rubber	ｸｯｼｮﾝ ﾗﾊﾞｰ	4				
8	38465 23400		Cushion rubber	ｸｯｼｮﾝ ﾗﾊﾞｰ	4				
9	37170 12200		Joint	ｼﾞｮｲﾝﾄ	1				
10	03570 08044		Hose	ﾎｰｽ	1				
11	03511 20020		Hose clip	ﾎｰｽ ｸﾘｯﾌﾟ	2				
12	37170 29400		Joint	ｼﾞｮｲﾝﾄ	1				
13	52728 61710		Cushion rubber	ｸｯｼｮﾝ ﾗﾊﾞｰ	1				
14	02136 06025		Bolt	ﾎﾞﾙﾄ	2				
15	03116 15006		Plain washer	ﾌﾟﾚｰﾝ ﾜｯｼｬ	2				
16	52744 01100		Washer	ﾜｯｼｬ	2				
17	35421 06900		Air valve	ｴｱ ﾊﾞﾙﾌﾞ	1				
18	33238 02700		Plug	ﾌﾟﾗｸﾞ	1				
19	43650 02700		Fuel pump	ﾌｭｴﾙ ﾎﾟﾝﾌﾟ	1				
20	02201 06016		Flange bolt	ﾌﾗﾝｼﾞ付ﾎﾞﾙﾄ	2				
21	43540 08800		Fuel filter(pre)	ﾌｭｴﾙ ﾌｨﾙﾀ(ﾌﾟﾚ)	1				See Engine parts Fig.19.
22	43456 01900		Bolt	ﾎﾞﾙﾄ	2				See Engine parts Fig.19.
23	37181 07700		Clip	ｸﾘｯﾌﾟ	1				
24	37181 04200		Clip	ｸﾘｯﾌﾟ	5				
25	43540 09800		Fuel filter(main)	ﾌｭｴﾙ ﾌｨﾙﾀ(ﾒｲﾝ)	1				See Engine parts Fig.19.
26	43340 41600		Bracket	ﾌﾞﾗｹｯﾄ	1				
27	02201 08020		Flange bolt	ﾌﾗﾝｼﾞ付ﾎﾞﾙﾄ	6				
28	44290 68300		Guide	ｶﾞｲﾄﾞ	1				
29	02248 08016		Bolt,w/w	ﾜｯｼｬ付ﾎﾞﾙﾄ	2				
30	02248 08025		Bolt,w/w	ﾜｯｼｬ付ﾎﾞﾙﾄ	1				
31	43526 09800		Hose	ﾎｰｽ	1				
32	43526 09700		Hose	ﾎｰｽ	1				
33	43526 09600		Hose	ﾎｰｽ	1				
34	43526 10100		Hose	ﾎｰｽ	1				
35	43526 10000		Hose	ﾎｰｽ	1				
36	43526 09900		Hose	ﾎｰｽ	1				
37	03511 40018		Hose clip	ﾎｰｽ ｸﾘｯﾌﾟ	10				
38	43660 00500		Clip	ｸﾘｯﾌﾟ	2				
39	03425 00001		Vinyl clip	ﾋﾞﾆｰﾙ ｸﾘｯﾌﾟ	20				
40	02201 08030		Flange bolt	ﾌﾗﾝｼﾞ付ﾎﾞﾙﾄ	2				

Go to Discount-equipment.com to order your parts

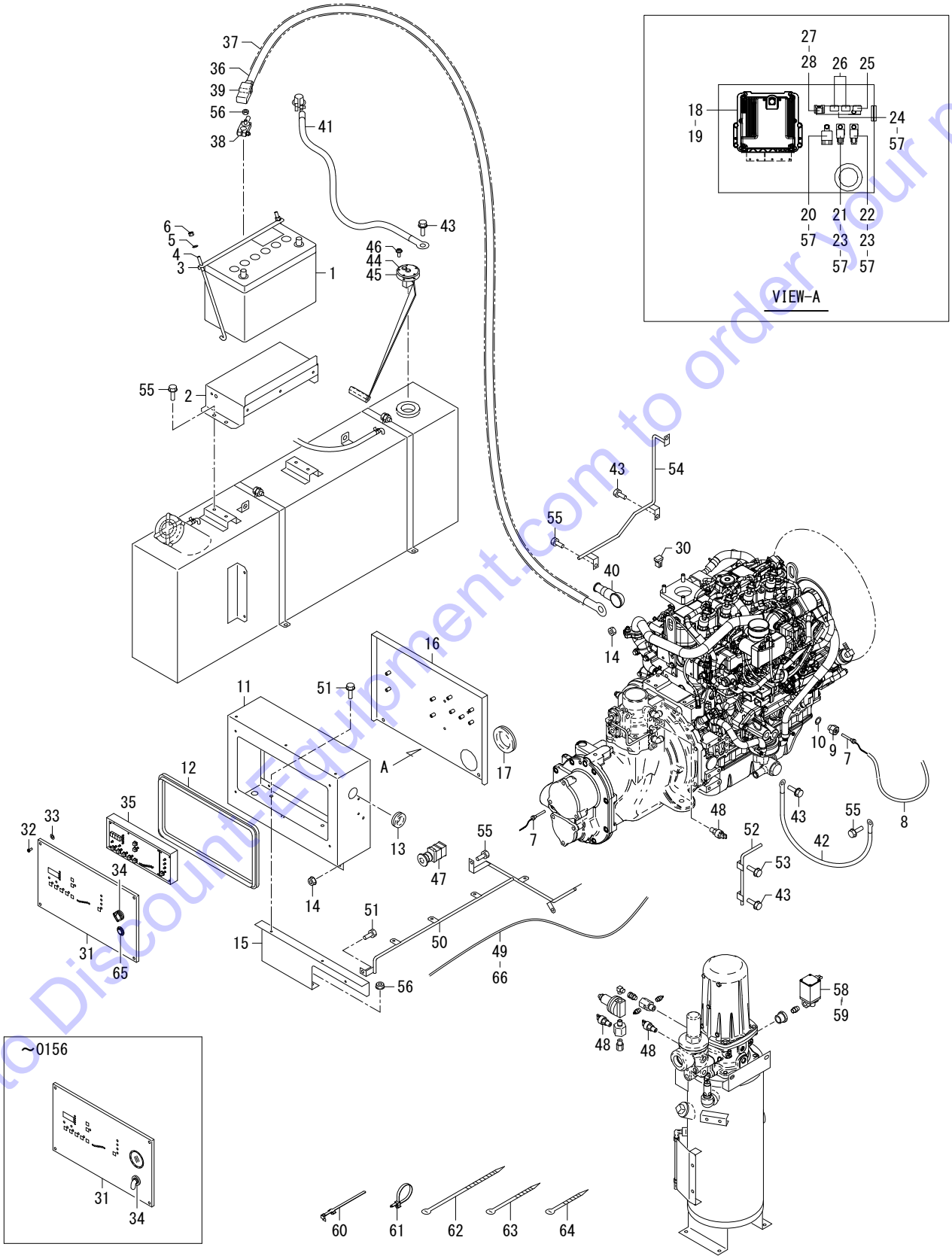

Go to Discount-Equipment.com to order your parts

見出番号 Ref.NO.	部品番号 Part NO.	互換性 Inter-change ability	部品名称 Part Name		数量 Q'ty	適用号機範囲 Applicable Ser.No. 5E1	適用号機範囲 Applicable Ser.No. -	変更 C/H	備考 Remarks
	44 - 00		ELECTRIC GROUP	ｴﾚｸﾄﾘｯｸ ｸﾞﾙｰﾌﾟ					
1	44210 06700	Y	Battery	ﾊﾞｯﾃﾘ	1				(95D31R)
1	44210 08500	Y	Battery	ﾊﾞｯﾃﾘ	1				(95D31R)
2	44100 12201		Battery box	ﾊﾞｯﾃﾘ ﾎﾞｯｸｽ	1				
3	44220 19800		Cover	ｶﾊﾞｰ	1				
4	44243 02600		Holder	ﾎﾙﾀﾞ	2				
5	02915 20006		Nut,w/w	ﾜｯｼｬ付ﾅｯﾄ	2				
6	03116 12006		Plain washer	ﾌﾟﾚｰﾝ ﾜｯｼｬ	2				
7	44364 08200		Thermo sensor	ｻｰﾓ ｾﾝｻ	2				(dis.air/water)
8	06540 07020		Corrugated tube	ｺﾙｹﾞｰﾄ ﾁｭｰﾌﾞ	2				
9	36331 15500		Nipple	ﾆｯﾌﾟﾙ	1				
10	03407 20016		Gasket	ｶﾞｽｹｯﾄ	1				
11	44250 87710		Bracket	ﾌﾞﾗｹｯﾄ	1				
12	03407 64759		Seal rubber	ｼｰﾙ ﾗﾊﾞｰ	1				
13	03403 00362		Grommet	ｸﾞﾛﾒｯﾄ	1				
14	02915 00006		Hexagon flange nuts	ﾌﾗﾝｼﾞ付ﾅｯﾄ	3				
15	44250 88310		Bracket	ﾌﾞﾗｹｯﾄ	1	～0143			
15 -1	44250 01720	B	Bracket	ﾌﾞﾗｹｯﾄ	1	0144～		M11	
16	44250 88010		Bracket	ﾌﾞﾗｹｯﾄ	1				
17	03403 00703		Grommet	ｸﾞﾛﾒｯﾄ	1				
18	46870 64400		Controller	ｺﾝﾄﾛｰﾗ	1				(YANMAR 1R1797-00101)
19	02138 06030		Bolt	ﾎﾞﾙﾄ	4				
	03115 02006		Spring washer	ｽﾌﾟﾘﾝｸﾞ ﾜｯｼｬ	4				
	03116 12006		Plain washer	ﾌﾟﾚｰﾝ ﾜｯｼｬ	4				
20	44346 17100		Relay(EGR)	ﾘﾚｰ(EGR)	1				(YANMAR 172802-17150)
21	44346 16600		Relay(starter)	ﾘﾚｰ(ｽﾀｰﾀ)	1				(YANMAR 129927-77920)
22	44346 16600		Relay(glow)	ﾘﾚｰ(ｸﾞﾛｰ)	1				(YANMAR 129927-77920)
23	44250 41710		Bracket	ﾌﾞﾗｹｯﾄ	2				
24	44250 32110		Bracket	ﾌﾞﾗｹｯﾄ	1				
25	44470 01600		Fuse box	ﾋｭｰｽﾞ ﾎﾞｯｸｽ	1				
	46934 03200		Fuse	ﾋｭｰｽﾞ	1				(10A)
26	44470 01700		Fuse box	ﾋｭｰｽﾞ ﾎﾞｯｸｽ	1				
	46934 03300		Fuse	ﾋｭｰｽﾞ	1				(20A)
27	44470 03000		Fuse box	ﾋｭｰｽﾞ ﾎﾞｯｸｽ	1				(80A)
28	02345 66008		Screw	ｽｸﾘｭ	2				
	03115 02006		Spring washer	ｽﾌﾟﾘﾝｸﾞ ﾜｯｼｬ	2				
	03116 12006		Plain washer	ﾌﾟﾚｰﾝ ﾜｯｼｬ	2				
29	44461 22600		Connector	ｺﾈｸﾀ	1				
30	44470 02900		Fuse box	ﾋｭｰｽﾞ ﾎﾞｯｸｽ	1				(50A)
31	44250 87810		Bracket	ﾌﾞﾗｹｯﾄ	1	～0156			
31 -1	44250 11020	B	Bracket	ﾌﾞﾗｹｯﾄ	1	0157～		M14	
32	02401 66020		Screw	ｽｸﾘｭ	4				
33	45214 01400		Washer	ﾜｯｼｬ	4				
34	44322 07300		Starter switch	ｽﾀｰﾀ ｽｲｯﾁ	1	～0156			
	52739 00600	C	Key	ｷｰ	1	0157～		M14	
34 -1	46167 07000	B	Select switch	電源ｽｲｯﾁ	1	0157～		M14	
	45214 03300	D	Washer	ﾜｯｼｬ	1	0157～		M14	
35	46870 64003		Controller	ｺﾝﾄﾛｰﾗ	1	～0156			(emergency)
35 -1	46870 00711	B	Controller	ｺﾝﾄﾛｰﾗ	1	0157～		M14	(emergency)
36	05085 21074		Cable	ｹｰﾌﾞﾙ	1				(battery～starter)
37	06540 10074		Corrugated tube	ｺﾙｹﾞｰﾄ ﾁｭｰﾌﾞ	1				

Go to DiscountEquipment.com to order your parts

見出番号 Ref.NO.	部品番号 Part NO.	互換性 Interchangeability	部品名称 Part Name		数量 Q'ty	適用号機範囲 Applicable Ser.No. 5E1	適用号機範囲 Applicable Ser.No. -	変更 C/H	備考 Remarks
38	05625 00018		Terminal	ﾀｰﾐﾅﾙ	1				
39	44462 06700		Insulator	ｲﾝｼｭﾚｰﾀ	1				(battery"+")
40	44462 00800		Insulator	ｲﾝｼｭﾚｰﾀ	1				(starter)
41	07888 51050		Cable	ｹｰﾌﾞﾙ	1				(earth)
42	05068 23050		Cable	ｹｰﾌﾞﾙ	1				(earth)
43	02248 10020		Bolt,w/w	ﾜｯｼｬ付ﾎﾞﾙﾄ	4				
44	36159 04500		Sending unit	ｾﾝﾃﾞｨﾝｸﾞ ﾕﾆｯﾄ	1				Incl.No.45
45	36153 01600		Gasket	ｶﾞｽｹｯﾄ	1				
46	02415 65012		Screw,w/w	ﾜｯｼｬ付ｽｸﾘｭ	5				
47	44336 03801		Botton switch (Incl.Cap)	非常停止ﾎﾞﾀﾝ	1				(emergency stop)
	44382 01301		Cap	ｷｬｯﾌﾟ	1				
48	44328 20600		Pressure switch	圧力ｽｲｯﾁ	3				
49	44490 27051		Wiring harness	ﾜｲﾔﾊｰﾈｽ	1	～0156			
49 -1	44490 77950	B	Wiring harness	ﾜｲﾔﾊｰﾈｽ	1	0157～		M14	
50	44290 70700		Guide	ｶﾞｲﾄﾞ	1				
51	02201 06016		Flange bolt	ﾌﾗﾝｼﾞ付ﾎﾞﾙﾄ	8				
52	44290 68600		Guide	ｶﾞｲﾄﾞ	1				
53	02248 08016		Bolt,w/w	ﾜｯｼｬ付ﾎﾞﾙﾄ	1				
54	44290 70600		Guide	ｶﾞｲﾄﾞ	1				
55	02201 08020		Flange bolt	ﾌﾗﾝｼﾞ付ﾎﾞﾙﾄ	8				
56	02915 00008		Hexagon flange nuts	ﾌﾗﾝｼﾞ付ﾅｯﾄ	3				
57	02248 06016		Bolt,w/w	ﾜｯｼｬ付ﾎﾞﾙﾄ	5				
58	46811 30000		Solenoid valve	電磁弁	1				
59	06540 07025		Corrugated tube	ｺﾙｹﾞｰﾄ ﾁｭｰﾌﾞ	1				
60	37181 07700		Clip	ｸﾘｯﾌﾟ	14				
60 -1	37181 07700	Q	Clip	ｸﾘｯﾌﾟ	10				
61	37181 04200		Clip	ｸﾘｯﾌﾟ	2				
62	03425 00005		Vinyl clip	ﾋﾞﾆｰﾙ ｸﾘｯﾌﾟ	10				
63	03425 00003		Vinyl clip	ﾋﾞﾆｰﾙ ｸﾘｯﾌﾟ	2				
64	03425 00001		Vinyl clip	ﾋﾞﾆｰﾙ ｸﾘｯﾌﾟ	22				
65	46242 23400	D	Push button switch	始動ﾎﾞﾀﾝ	1	0157～		M14	
66	46921 02300	D	Silicon rectifier	整流器	1	0157～		M14	

Go to Discount-Equipment.com to order your parts

51 - 00 FRAME & BONNET

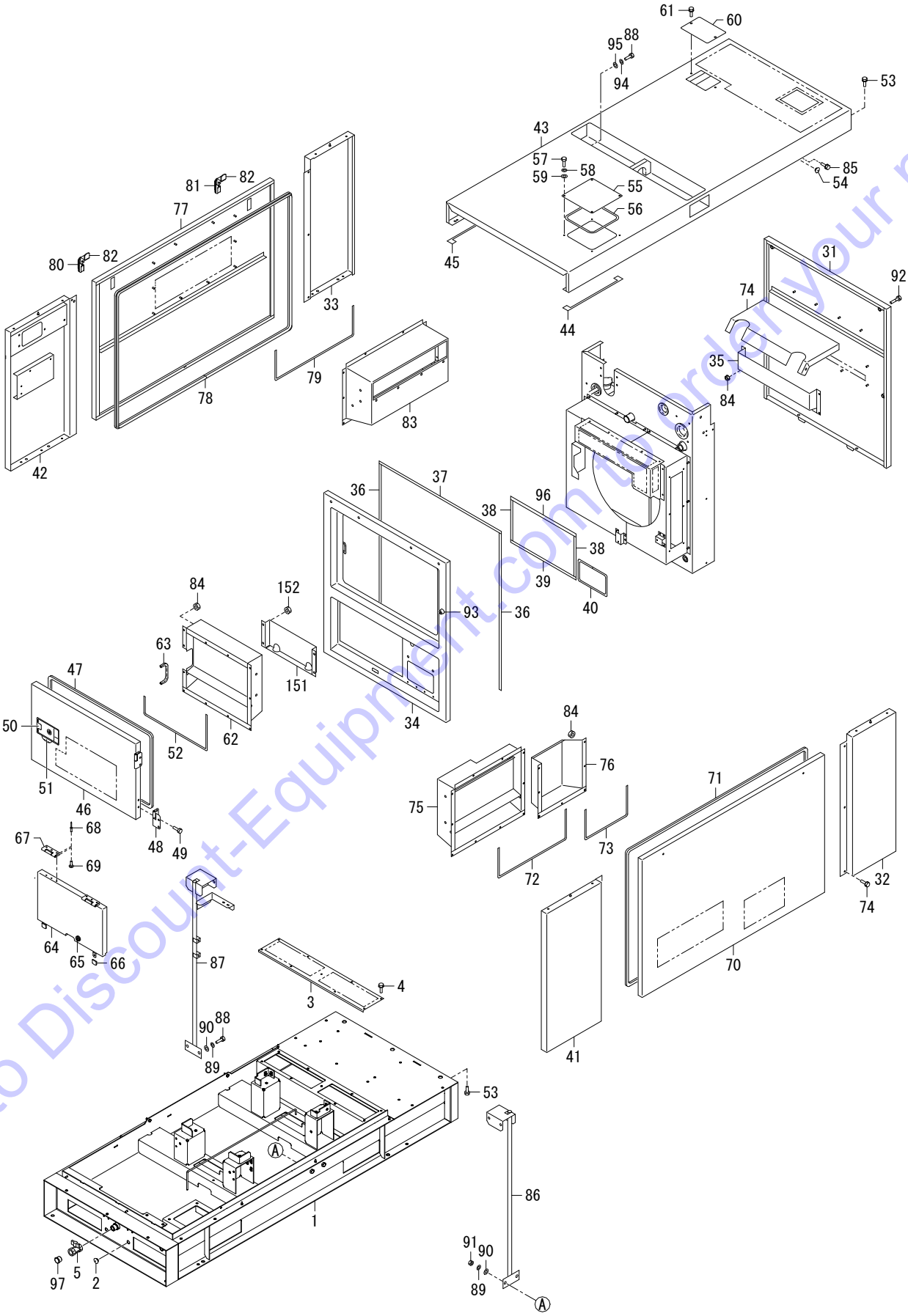

Go to Discount-Equipment.com to order your parts

2408-04

見出番号 Ref.NO.	部品番号 Part NO.	互換性 Inter-change ability	部品名称 Part Name		数量 Q'ty	適用号機範囲 Applicable Ser.No. 5E1	適用号機範囲 Applicable Ser.No. -	変更 C/H	備考 Remarks
	51 - 00		FRAME GROUP	ﾌﾚｰﾑ ｸﾞﾙｰﾌﾟ					
1	51100 10450		Frame	ﾌﾚｰﾑ	1	～0078			
1 -1	51100 10850	B	Frame	ﾌﾚｰﾑ	1	～0091		M 2	
1 -2	51100 11050	B	Frame	ﾌﾚｰﾑ	1	～0130		M 4	
1 -3	51100 12950	B	Frame	ﾌﾚｰﾑ	1	～0143		M10	
1 -4	51100 14450	B	Frame	ﾌﾚｰﾑ	1	0144～		M11	
2	03403 10017		Grommet	ｸﾞﾛﾒｯﾄ	4				
3	52350 52230		Cover	ｶﾊﾞｰ	1				
4	02201 06016		Flange bolt	ﾌﾗﾝｼﾞ付ﾎﾞﾙﾄ	5				
5	03735 13006		Valve	ﾊﾞﾙﾌﾞ	1				
	52 - 00		BONNET GROUP	ﾎﾞﾝﾈｯﾄ ｸﾞﾙｰﾌﾟ					
31	52100 87330		Cover	ｶﾊﾞｰ	1				
32	52100 87430		Cover	ｶﾊﾞｰ	1				
33	52100 87530		Cover	ｶﾊﾞｰ	1				
34	52100 88630		Cover	ｶﾊﾞｰ	1	～0091			
34 -1	52100 01040	B	Cover	ｶﾊﾞｰ	1	～0156		M 4	
34 -2	52100 12640	B	Cover	ｶﾊﾞｰ	1	0157～		M14	
35	52800 35210		Duct	ﾀﾞｸﾄ	1				
36	03407 66850		Seal rubber	ｼｰﾙ ﾗﾊﾞｰ	2				
37	03407 66821		Seal rubber	ｼｰﾙ ﾗﾊﾞｰ	1				
38	03407 66940		Seal rubber	ｼｰﾙ ﾗﾊﾞｰ	2				
39	03407 66916		Seal rubber	ｼｰﾙ ﾗﾊﾞｰ	1				
40	03407 68065		Seal rubber	ｼｰﾙ ﾗﾊﾞｰ	1	～0091			
40 -1	03407 68066	B	Seal rubber	ｼｰﾙ ﾗﾊﾞｰ	1	0092～		M 4	
41	52100 88930		Cover	ｶﾊﾞｰ	1				
42	52100 89030		Cover	ｶﾊﾞｰ	1	～0078			
42 -1	52100 00940	B	Cover	ｶﾊﾞｰ	1	0079～		M 2	
43	52300 80620		Top cover	ﾄｯﾌﾟ ｶﾊﾞｰ	1				
44	52728 62710		Cushion rubber	ｸｯｼｮﾝ ﾗﾊﾞｰ	1				
45	52728 62810		Cushion rubber	ｸｯｼｮﾝ ﾗﾊﾞｰ	1				
46	52450 03340		Door	ﾄﾞｱ	1				
47	03407 64746		Seal rubber	ｼｰﾙ ﾗﾊﾞｰ	1				
48	52480 14400		Hinge	ﾋﾝｼﾞ	2				
49	02136 08016		Bolt	ﾎﾞﾙﾄ	8				
50	52710 03601		Latch ass'y	ﾗｯﾁ	1				key type
	52739 03400		Key	ｷｰ	1				(No.0200)
51	52728 14810		Cushion rubber	ｸｯｼｮﾝ ﾗﾊﾞｰ	1				
52	03407 68076		Seal rubber	ｼｰﾙ ﾗﾊﾞｰ	1				
53	02246 08025		Bolt,w/w	ﾜｯｼｬ付ﾎﾞﾙﾄ	22				
54	03403 10010		Grommet	ｸﾞﾛﾒｯﾄ	4				
55	52350 52830		Cover	ｶﾊﾞｰ	1				
56	03407 68076		Seal rubber	ｼｰﾙ ﾗﾊﾞｰ	1				
57	02136 06025		Bolt	ﾎﾞﾙﾄ	4				
58	03116 15006		Plain washer	ﾌﾟﾚｰﾝ ﾜｯｼｬ	4				
59	52744 01100		Washer	ﾜｯｼｬ	4				
60	52350 89010		Cover	ｶﾊﾞｰ	1				
61	02246 08016		Bolt,w/w	ﾜｯｼｬ付ﾎﾞﾙﾄ	2				
62	52800 35410		Duct	ﾀﾞｸﾄ	1				
63	03407 67232		Seal rubber	ｼｰﾙ ﾗﾊﾞｰ	1				

Go to Discount-Equipment.com to order your parts

見出番号 Ref.NO.	部品番号 Part NO.	互換性 Inter-change ability	部品名称 Part Name		数量 Q'ty	適用号機範囲 Applicable Ser.No. 5E1	-	変更 C/H	備考 Remarks
64	52450 02840		Door	ﾄﾞｱ	1	～0156			
64 -1	52450 27440	B	Door	ﾄﾞｱ	1	0157～		M14	
65	52723 00900		Lock	ﾛｯｸ	1				
66	52746 04100		Cap	ｷｬｯﾌﾟ	2				
67	52480 14700		Hinge	ﾋﾝｼﾞ	2				
68	03266 05012		Blind rivet	ﾘﾍﾞｯﾄ	6				
69	02401 46012		Screw	ｽｸﾘｭ	4				
70	52450 03740		Door	ﾄﾞｱ	1				
71	03407 64753		Seal rubber	ｼｰﾙ ﾗﾊﾞｰ	1				
72	03407 68083		Seal rubber	ｼｰﾙ ﾗﾊﾞｰ	1				
73	03407 68065		Seal rubber	ｼｰﾙ ﾗﾊﾞｰ	1				
74	52350 52530		Cover	ｶﾊﾞｰ	1				
75	52800 35611		Duct	ﾀﾞｸﾄ	1				
76	52800 35510		Duct	ﾀﾞｸﾄ	1				
77	52450 03440		Door	ﾄﾞｱ	1				
78	03407 64733		Seal rubber	ｼｰﾙ ﾗﾊﾞｰ	1				
79	03407 68090		Seal rubber	ｼｰﾙ ﾗﾊﾞｰ	1				
80	52710 07900		Latch ass'y	ﾗｯﾁ	1				
81	52710 07200		Latch ass'y	ﾗｯﾁ	1				
82	52746 01900		Cap	ｷｬｯﾌﾟ	2				
83	52800 35310		Duct	ﾀﾞｸﾄ	1				
84	02915 00006		Hexagon flange nuts	ﾌﾗﾝｼﾞ付ﾅｯﾄ	52				
85	02246 06016		Bolt,w/w	ﾜｯｼｬ付ﾎﾞﾙﾄ	11				
86	52620 56500		Lifting bail	ﾘﾌﾃｨﾝｸﾞ ﾍﾞｲﾙ	1				
87	52620 56601		Lifting bail	ﾘﾌﾃｨﾝｸﾞ ﾍﾞｲﾙ	1				
88	02135 12040		Bolt	ﾎﾞﾙﾄ	6				
89	03115 02012		Spring washer	ｽﾌﾟﾘﾝｸﾞ ﾜｯｼｬ	4				
90	03116 12012		Plain washer	ﾌﾟﾚｰﾝ ﾜｯｼｬ	4				
91	02912 06012		Nut	ﾅｯﾄ	2				
92	02246 08050		Bolt,w/w	ﾜｯｼｬ付ﾎﾞﾙﾄ	10				
93	31131 04100		Rubber, vibration isolator	ﾗﾊﾞｰ	1				
94	03115 06012		Spring washer	ｽﾌﾟﾘﾝｸﾞ ﾜｯｼｬ	4				(SUS)
95	03116 15012		Plain washer	ﾌﾟﾚｰﾝ ﾜｯｼｬ	4				(SUS)
96	03407 67301		Seal rubber	ｼｰﾙ ﾗﾊﾞｰ	1				
97	33238 02900	D	Plug	ﾌﾟﾗｸﾞ	1	0196～		M711	
	39 - 00		ACCESSORY GROUP	ｱｸｾｻﾘ ｸﾞﾙｰﾌﾟ					
151	39200 04302		Tool box	ﾂｰﾙ ﾎﾞｯｸｽ	1				
152	02915 00006		Hexagon flange nuts	ﾌﾗﾝｼﾞ付ﾅｯﾄ	4				

Go to DiscountEquipment.com to order your parts

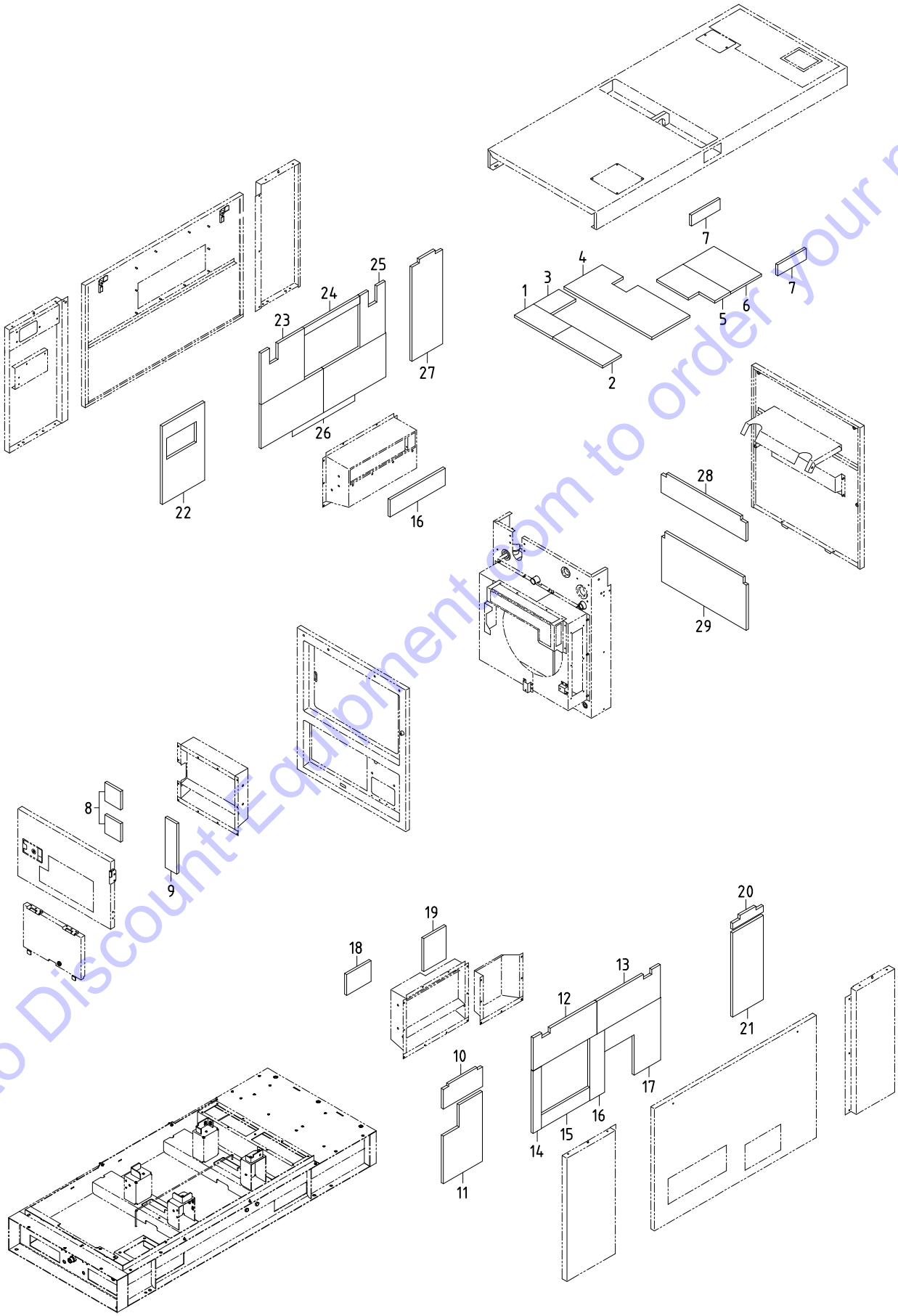

Go to Discount-Equipment.com to order your parts

見出番号 Ref.NO.	部品番号 Part NO.	互換性 Inter-change ability	部品名称 Part Name		数量 Q'ty	適用号機範囲 Applicable Ser.No. 5E1	-	変更 C/H	備考 Remarks
	52900 76220		URETHANE FOAM KIT	ｳﾚﾀﾝ ﾌｫｰﾑ ｷｯﾄ					
1	52959 57040		Lining	ﾗｲﾆﾝｸﾞ	1				
2	52959 16640		Lining	ﾗｲﾆﾝｸﾞ	1				
3	52959 59260		Lining	ﾗｲﾆﾝｸﾞ	1				
4	52931 48130		Lining	ﾗｲﾆﾝｸﾞ	1				
5	52931 48230		Lining	ﾗｲﾆﾝｸﾞ	1				
6	52959 59360		Lining	ﾗｲﾆﾝｸﾞ	1				
7	52919 34630		Lining	ﾗｲﾆﾝｸﾞ	2				
8	52977 49510		Lining	ﾗｲﾆﾝｸﾞ	2				
9	52977 49610		Lining	ﾗｲﾆﾝｸﾞ	1				
10	52931 48330		Lining	ﾗｲﾆﾝｸﾞ	1				
11	52931 48530		Lining	ﾗｲﾆﾝｸﾞ	1				
12	52978 77701		Lining	ﾗｲﾆﾝｸﾞ	1				
13	52978 77801		Lining	ﾗｲﾆﾝｸﾞ	1				
14	52977 51400		Lining	ﾗｲﾆﾝｸﾞ	1				
15	52977 49710		Lining	ﾗｲﾆﾝｸﾞ	1				
16	52977 49810		Lining	ﾗｲﾆﾝｸﾞ	2				
17	52978 77600		Lining	ﾗｲﾆﾝｸﾞ	1				
18	52977 49910		Lining	ﾗｲﾆﾝｸﾞ	1				
19	52977 68200		Lining	ﾗｲﾆﾝｸﾞ	1				
20	52939 25540		Lining	ﾗｲﾆﾝｸﾞ	1				
21	52919 09610		Lining	ﾗｲﾆﾝｸﾞ	1				
22	52931 48430		Lining	ﾗｲﾆﾝｸﾞ	1				
23	52978 77901		Lining	ﾗｲﾆﾝｸﾞ	1				
24	52977 50010		Lining	ﾗｲﾆﾝｸﾞ	1				
25	52978 78001		Lining	ﾗｲﾆﾝｸﾞ	1				
26	52977 50210		Lining	ﾗｲﾆﾝｸﾞ	2				
27	52939 25640		Lining	ﾗｲﾆﾝｸﾞ	1				
28	52939 25740		Lining	ﾗｲﾆﾝｸﾞ	1				
29	52939 25840		Lining	ﾗｲﾆﾝｸﾞ	1				

Go to Discount-Equipment.com to order your parts

エンジン パーツ
ENGINE PARTS

原動機型式 ENGINE MODEL	YANMAR 4TNV88C-DHKS1

Go to Discount-Equipment.com to order your parts

Directions for the Parts Catalog.

1.This Parts Catalog shows both standard and optional parts.
2.Parts may change without prior notice.
3.The following is an example of the Parts Catalog format.

0CF10-G21601 29. FUEL INJECTION PUMP(W/BOOST)

(A)=4JH-DT
(B)=4JH-DTZ
(C)=4JH-DTZP
(D)=4JH-DTZA
(E)=4JH-DTZY
(F)=

① REF.	② LEV.	PARTS NO.	DESCRIPTION	Q'TY (A)	(B)	(C)	(D)	(E)	(F)	③ I	⑤ R
1	1	729595-51390	FUEL INJECTION PUMP	1	1	1	1	1			1
1-1	1	729595-51391	FUEL INJECTION PUMP	1	1	1	1	1		N	1
	(A=E00185)	(B=E00200)									
3	2	26022-060162	SCREW M 6X 16	9	9	9	9	9			
3-1 ④	2	26022-060162	SCREW M 6X 16	4	4	4	4	4		K	
	(A=E00156)	(B=E00156)	(C=E00156) (D=E00156)	(E=E00156)							
4	2	129470-51040	CAMSHAFT	1	1	1	1	1			
5	2	122710-51050	BEARING, ROLLER	2	2	2	2	2			
6	2	129470-51060	RETAINER	1	1	1	1	1			

Remarks
(1) BOOST COMPEMSATOR TYPE. OPTIONAL PART, TO E00155,(4JH-DT, 4JH-DTZ

① Ref. No.

The Ref. No. listed may not be in accordance with the illustration Ref. No.

(Ex.) Illustration No. 1 — List Ref No. 1 (Before change) → 1- 1 (After change)

For interchangeable symbols N, R and K, illustrations for new parts may be abbreviated.

② Lev. (Level)

Level indication
The numbers below indicate the level of relativity towards the main part.
1 ----- Main parts (Assembly parts)
2 ----- Sub component included in " 1 ".
3 ----- Sub component included in " 2 ".
Note) Parts that are not for sale are partially illustrated but not listed.

③ Interchangeability Symbol

When a part change takes place, one of the following interchangeability symbols is indicated beside the part.

Symbol	Interchangeability	Contents note
N	Old ← Yes / No → New	New Part is interchangeable for Old Part but Old Part is not interchangeable for New Part.
Q	Old ← No / Yes → New	New Part is not interchangeable for Old Part but Old Part is interchangeable for New Part.
R	Old ← Yes / Yes → New	New/ Old Parts are both interchangeable.
S	Old ← No / No → New	New/ Old Parts are both not interchangeable.
W		Part newly added.
Z		Part discontinued.
F		Not interchangeable by a single part but interchangeable together with related parts.
K		Changes only for used parts quantities.

④ Effective Machine No.

When a part changes, the effective Machine No. will be indicated in the (A)-(F) column.

Product Symbol	Product No.	Product Symbol	Product No.
C	Clutch No. Compressor No.	F	Machine No. (Agricultural Equip.)
D	Drive No.	M	Machine No.
E	Engine No.		

Note 1) A date may follow the symbol. (Ex.) 1996.01
Note 2) " XXXXX " and " ZZZZZ " are for parts that could not be predicted or for engine models that could not be identified.
Note 3) (A=E00185) is the E (Engine Serial Number) for the column (A) model (in this case 4JH-DT) after the parts design change.

⑤ Remarks

Figures or alphabets (symbols) are entered in the remarks column.
The comments (remarks) on parts that are indicated at the bottom of the illustration are the same symbols as those stated above.

Go to Discount-Equipment.com to order your parts

Fig.1. CYLINDER BLOCK

(A)=4TNV88C-DHKS1 (D)=
(B)= (E)=
(C)= (F)=

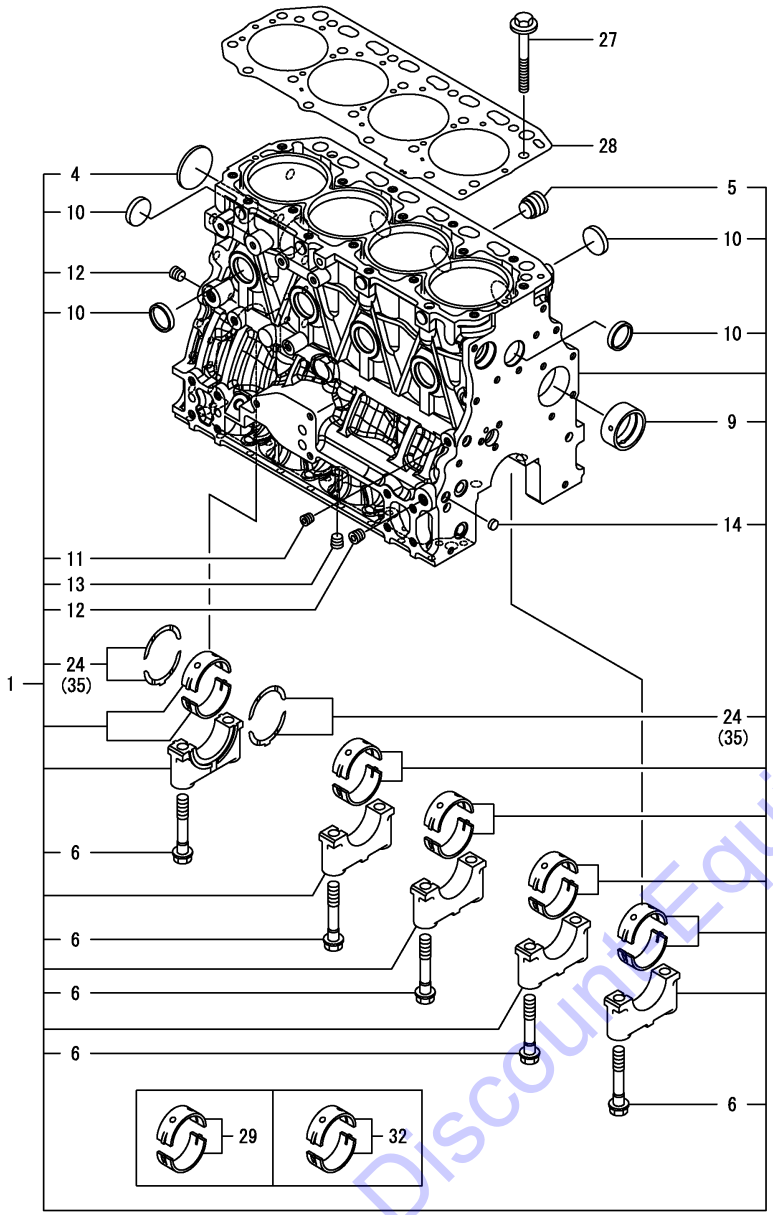

No.	Lev.	Parts No.	Description	Q'ty (A)	(B)	(C)	(D)	(E)	(F)	I	R
1	1	129C00-01560	BLOCK ASSY, CYLINDER	1							
4	2	129001-01250	PLUG, 50	1							
5	2	171051-01921	PLUG, NPTF1	1							
6	2	129150-02020	BOLT, METAL CAP	10							
9	2	129795-02412	BUSH, CAMSHAFT	1							
10	2	27241-300000	PLUG(30	8							
11	2	124060-01050	PLUG, PT1/8	1							
12	2	124160-01910	PLUG, PT1/4	2							
13	2	124160-01910	PLUG, PT1/4	1							
14	2	27241-120000	PLUG, 12	1							
24	2	129150-02931	METAL ASSY, THRUST	2							
27	1	129150-01200	BOLT, CYLINDER HEAD	18							
28	1	129685-01350	GASKET, HEAD	1							
29	1	129001-02931	METAL ASSY, MAIN	5							1
32	1	129150-02871	METAL ASSY, MAIN .25	5							2
35	1	129150-02941	METAL ASSY, 0.25 OS	1							3

Remarks
(1)Spare parts.
(2)Under-sized(U.S.=0.25) parts.
(3)Over-sized(O.S.=0.25) parts.

N:Old $\xleftarrow[\text{No}]{\text{Yes}}$ New, Q:Old $\xleftarrow[\text{Yes}]{\text{No}}$ New, R:Old $\xleftarrow[\text{Yes}]{\text{Yes}}$ New, S:Old $\xleftarrow[\text{No}]{\text{No}}$ New, W:Add, Z:Discontinued, F:Interchangeable by set, K:Q'ty Change

Copyright (C) 2020 YANMAR GLOBAL CS CO., LTD. All RightsReserved.

Go to DiscountEquipment.com to order your parts

Fig.2. GEAR HOUSING

(A)=4TNV88C-DHKS1
(B)=
(C)=
(D)=
(E)=
(F)=

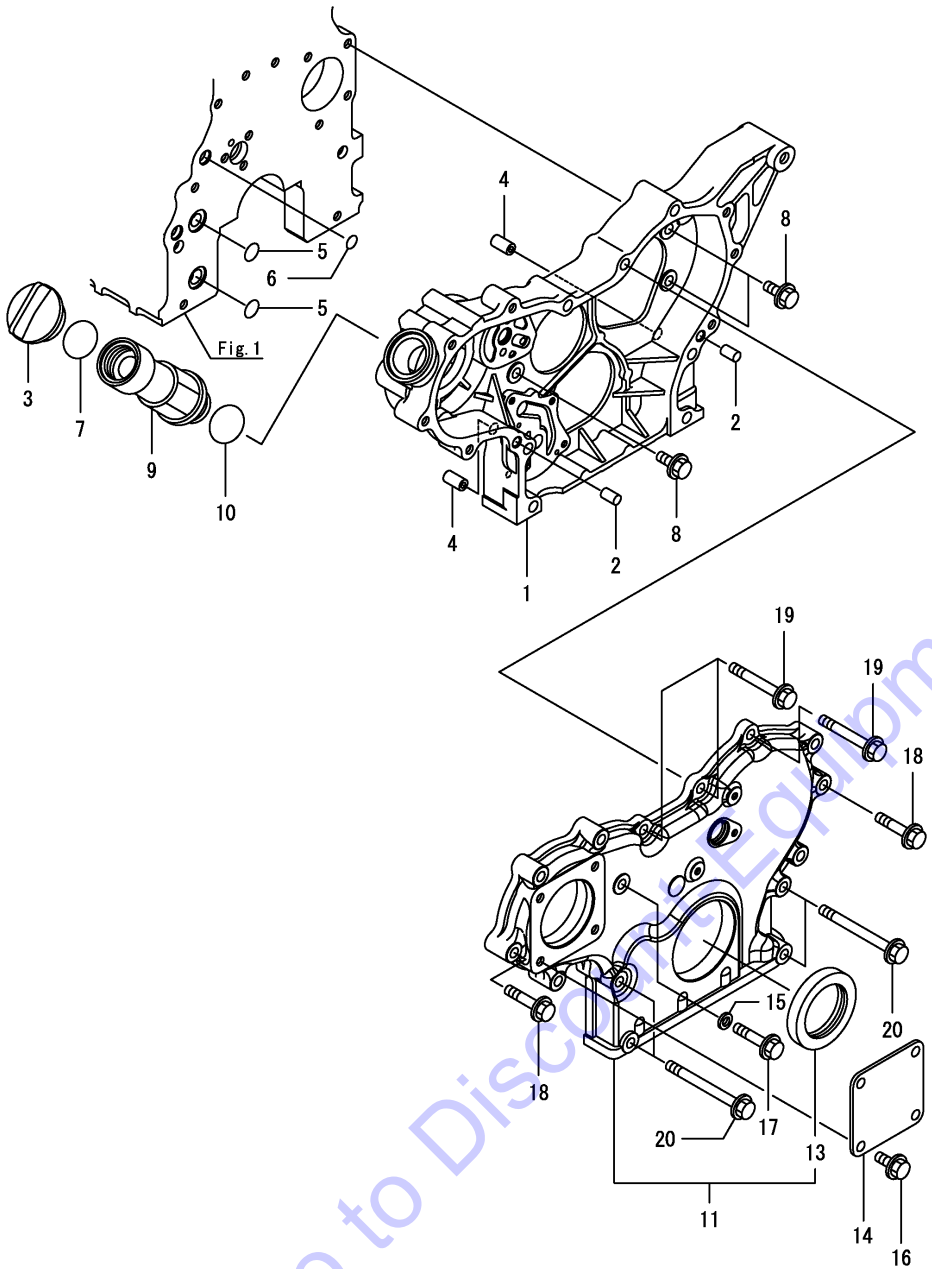

No.	Lev.	Parts No.	Description	Q'ty (A)	(B)	(C)	(D)	(E)	(F)	I	R
1	1	129A00-01500	CASE, GEAR	1							
2	1	129100-01580	PIN, PARALLEL 8X16	2							
3	1	124160-01751	CAP, FILLER	1							
4	1	129795-01950	PIPE, KNOCK L=18	2							
5	1	119609-32040	O-RING, P16	2							
6	1	119624-32040	O-RING, P12.0	1							
7	1	24311-000320	O-RING, 1AP32.0	1							
8	1	26106-080162	BOLT, M8X 16 PLATED	3							
9	1	171031-11741	PIPE, FILLER	1							
10	1	24311-000320	O-RING, 1AP32.0	1							
11	1	129A00-01550	COVER ASSY, CASE	1							
13	2	119934-01800	SEAL, OIL	1							
14	1	124240-01871	COVER,HYDRAULIC PUMP	1							
15	1	22190-080002	WASHER, SEAL 8	1							
16	1	26106-080162	BOLT, M8X 16 PLATED	4							
17	1	26106-080352	BOLT, M8X 35 PLATED	1							
18	1	26106-080402	BOLT, M8X 40 PLATED	7							
19	1	26106-080602	BOLT, M8X 60 PLATED	3							
20	1	26106-080852	BOLT, M8X 85 PLATED	4							

N:Old $\xleftarrow[\text{No}]{\text{Yes}}$ New, Q:Old $\xleftarrow[\text{Yes}]{\text{No}}$ New, R:Old $\xleftarrow[\text{Yes}]{\text{Yes}}$ New, S:Old $\xleftarrow[\text{No}]{\text{No}}$ New, W:Add, Z:Discontinued, F:Interchangeable by set, K:Q'ty Change

Copyright (C) 2020 YANMAR GLOBAL CS CO., LTD. All RightsReserved.

Go to Discount Equipment.com to order your parts

Fig.3. FLYWHEEL HOUSING & OIL SUMP

(A)=4TNV88C-DHKS1
(B)=
(C)=
(D)=
(E)=
(F)=

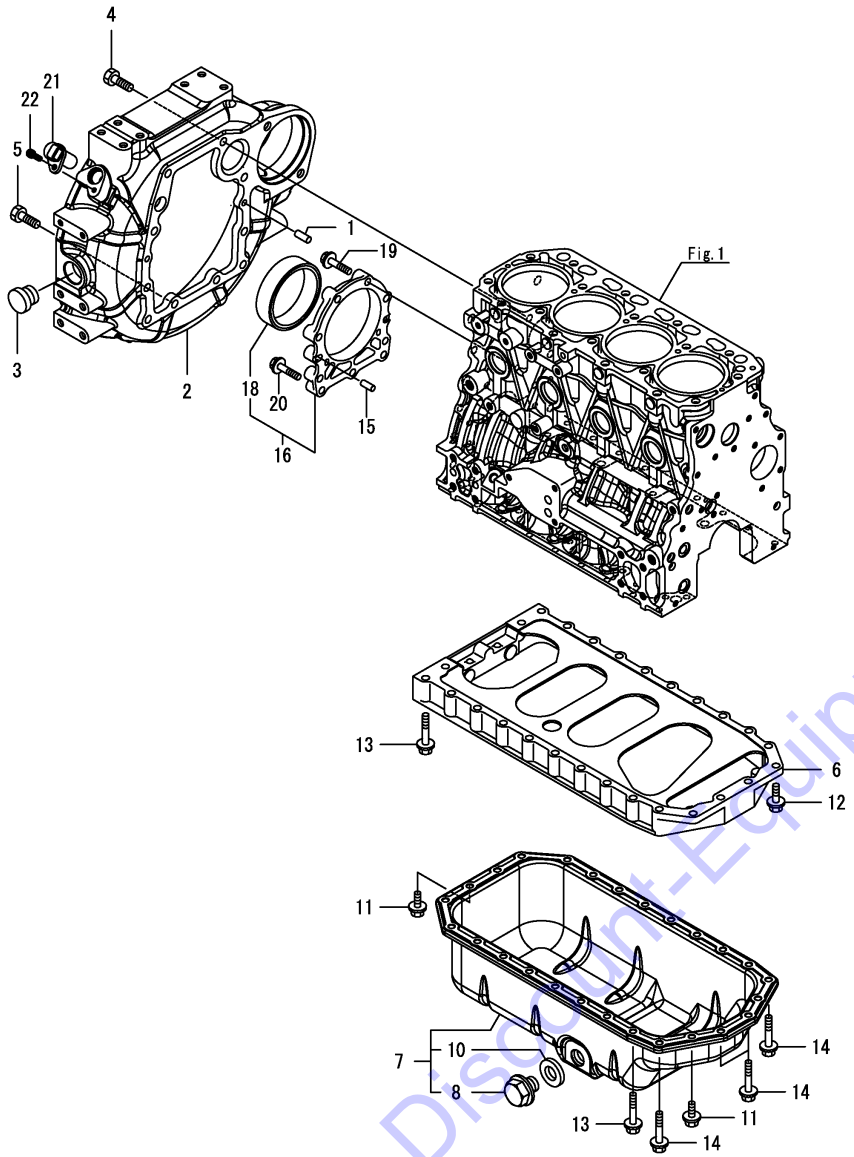

No.	Lev.	Parts No.	Description	Q'ty (A)	(B)	(C)	(D)	(E)	(F)	I	R
1	1	129100-01580	PIN, PARALLEL 8X16	2							
2	1	129A00-01602	HOUSING, FLYWHEEL	1							
3	1	119620-01750	CAP, WHEEL COVER	1							
4	1	26206-100252	BOLT, M10X 25 PLATED	6							
5	1	26206-100302	BOLT, M10X 30 PLATED	4							
6	1	129400-01730	SPACER, OIL PAN	1							
7	1	129688-01780	OIL PAN ASSY	1							
8	2	119640-01640	PLUG, DRAIN M22	1							
10	2	22190-220002	WASHER, SEAL 22	1							
11	1	26106-080162	BOLT, M8X 16 PLATED	4							
12	1	26106-080252	BOLT, M8X 25 PLATED	2							
13	1	26106-080452	BOLT, M8X 45 PLATED	20							
14	1	26106-080502	BOLT, M8X 50 PLATED	4							
15	1	129100-01580	PIN, PARALLEL 8X16	2							
16	1	129648-01600	CASE ASSY, OIL SEAL	1							
18	2	129648-01780	SEAL, OIL	1							
19	1	129486-01670	BOLT, M8X30	6							
20	1	26106-080352	BOLT, M8X 35 PLATED	3							
21	1	129A00-21710	SENSOR, FLYWHEEL	1							1
22	1	26450-060162	BOLT, M6X 16	1							

Remarks
(1)When replacing this part, it is necessary to update the software of the ECU using the designated service tool.
Please refer to the Service Manual for details.

N:Old ←Yes/No→ New, Q:Old ←No/Yes→ New, R:Old ←Yes/Yes→ New, S:Old ←No/No→ New, W:Add, Z:Discontinued, F:Interchangeable by set, K:Q'ty Change

Copyright (C) 2020 YANMAR GLOBAL CS CO., LTD. All RightsReserved.

Go to Discount-Equipment.com to order your parts

Fig.4. CYLINDER HEAD & BONNET

(A)=4TNV88C-DHKS1
(B)=
(C)=
(D)=
(E)=
(F)=

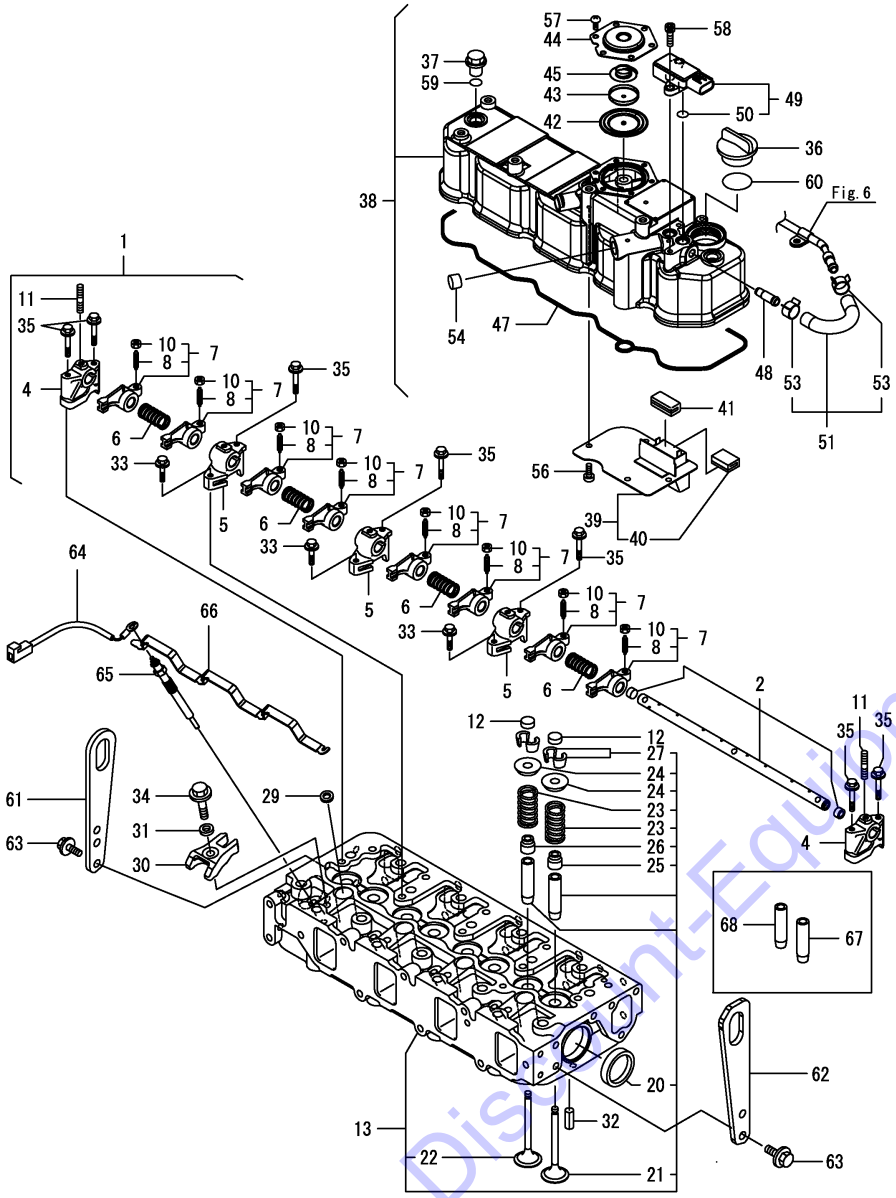

No.	Lev.	Parts No.	Description	Q'ty (A)	(B)	(C)	(D)	(E)	(F)	I	R
1	1	129601-11241	SHAFT ASSY, ROCKER	1							
2	2	129601-11251	SHAFT, ROCKER ARM	1							
4	2	119802-11260	SUPPORT, ROCKER ARM	2							
5	2	119802-11270	SUPPORT, ROCKER ARM	3							
6	2	129150-11280	SPRING, SHAFT	4							
7	2	129004-11650	ARM ASSY, ROCKER	8							
8	3	129150-11230	SCREW, VALVE ADJUST	8							
10	3	129150-11750	NUT, M8XP1.0	8							
11	2	26226-080182	STUD, M8X 18	3							
12	1	129150-11370	CAP, VALVE	8							
13	1	129C20-11700	HEAD ASSY, CYLINDER	1							
20	2	27241-400000	PLUG, 40	2							
21	2	129005-11100	VALVE, INTAKE	4							
22	2	129100-11112	VALVE, EXHAUST	4							
23	2	129795-11120	SPRING, VALVE	8							
24	2	129795-11180	RETAINER, SPRING	8							
25	2	124460-11340	SEAL, VALVE STEM	4							
26	2	129A00-11340	SEAL, VALVE STEM	4							
27	2	27310-080001	COTTER, 8	8							
29	1	129978-11871	GASKET, INJECTOR	4							
30	1	129A00-11900	RETAINER, INJECTOR	4							
31	1	120270-54410	WASHER, INJECTOR	4							
32	1	22351-060012	PIN, SPRING 6.0X12	2							
33	1	26106-080252	BOLT, M8X 25 PLATED	3							
34	1	26106-080352	BOLT, M8X 35 PLATED	4							
35	1	26106-080502	BOLT, M8X 50 PLATED	7							
36	1	124160-01751	CAP, FILLER	1							
37	1	124160-11360	KNOB, BONNET	3							
38	1	129C00-11360	BONNET ASSY, HEAD	1							
39	2	129004-03010	PLATE, BAFFLE	1							
40	1	119802-03070	BAFFLE, BREATHER	1							
41	2	129150-03070	BAFFLE, BREATHER	1							
42	2	123907-03100	DIAPHRAGM, BREATHER	1							
43	2	123907-03110	PLATE, CENTER	1							
44	2	123907-03120	PLATE, BREATHER	1							
45	2	123907-03140	SPRING, DIAPHRAGM	1							
47	2	129C00-11310	GASKET, BONNET	1							
48	2	129A00-11330	JOINT	1							
49	2	129978-12700	SENSOR, PRESSURE	1							1
50	3	129A00-12780	O-RING, EGR SENSOR	2							
51	2	129A00-13360	HOSE ASSY, PRESSURE	1							
53	3	129A00-13380	CLIP, HOSE 14	2							
54	2	119640-61400	PLUG	1							
56	2	22857-500100	SCREW, 5X10	4							
57	2	22857-500100	SCREW, 5X10	6							
58	2	26450-060162	BOLT, M6X 16	2							
59	1	24311-000120	O-RING, 1AP12.0	3							
60	1	24311-000320	O-RING, 1AP32.0	1							
61	1	129900-07900	LIFTER, ENGINE	1							
62	1	129900-07920	LIFTER, ENGINE	1							
63	1	26106-080162	BOLT, M8X 16 PLATED	4							

Remarks
(1)When replacing this part, it is necessary to update the software of the ECU using the designated service tool. Please refer to the Service Manual for details.
(2)Spare parts.

N:Old $\xleftrightarrow[\text{No}]{\text{Yes}}$ New, Q:Old $\xleftrightarrow[\text{Yes}]{\text{No}}$ New, R:Old $\xleftrightarrow[\text{Yes}]{\text{Yes}}$ New, S:Old $\xleftrightarrow[\text{No}]{\text{No}}$ New, W:Add, Z:Discontinued, F:Interchangeable by set, K:Q'ty Change

++ CONTINUE ++

Copyright (C) 2020 YANMAR GLOBAL CS CO., LTD. All RightsReserved.

Go to Discount-Equipment.com to order parts

Fig.4. CYLINDER HEAD & BONNET

(A)=4TNV88C-DHKS1
(B)=
(C)=
(D)=
(E)=
(F)=

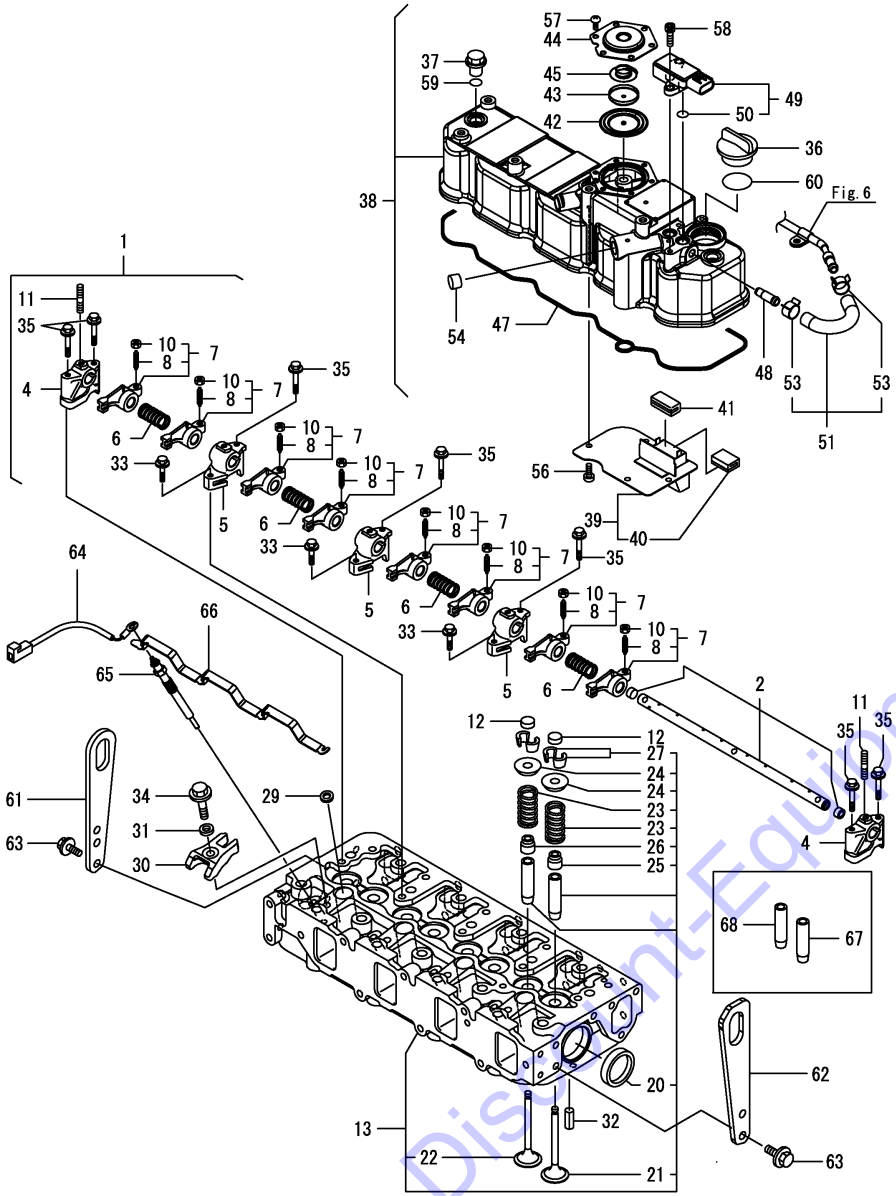

No.	Lev.	Parts No.	Description	Q'ty (A)	(B)	(C)	(D)	(E)	(F)	I	R
64	1	119803-77830	HARNESS, WIRE	1							
65	1	129008-77800	PLUG, GLOW	4							
66	1	129C00-77820	CONNECTOR, GLOW PLUG	1							
67	1	120130-11860	GUIDE, VALVE	4							2
68	1	129150-11810	GUIDE, VALVE	4							2

Remarks
(1)When replacing this part, it is necessary to update the software of the ECU using the designated service tool. Please refer to the Service Manual for details.
(2)Spare parts.

N:Old $\xleftarrow[\text{No}]{\text{Yes}}$ New, Q:Old $\xleftarrow[\text{Yes}]{\text{No}}$ New, R:Old $\xleftarrow[\text{Yes}]{\text{Yes}}$ New, S:Old $\xleftarrow[\text{No}]{\text{No}}$ New, W:Add, Z:Discontinued, F:Interchangeable by set, K:Q'ty Change

Copyright (C) 2020 YANMAR GLOBAL CS CO., LTD. All RightsReserved.

Go to Discount-Equipment.com to order your parts

Fig.5. SUCTION MANIFOLD

(A)=4TNV88C-DHKS1
(B)=
(C)=
(D)=
(E)=
(F)=

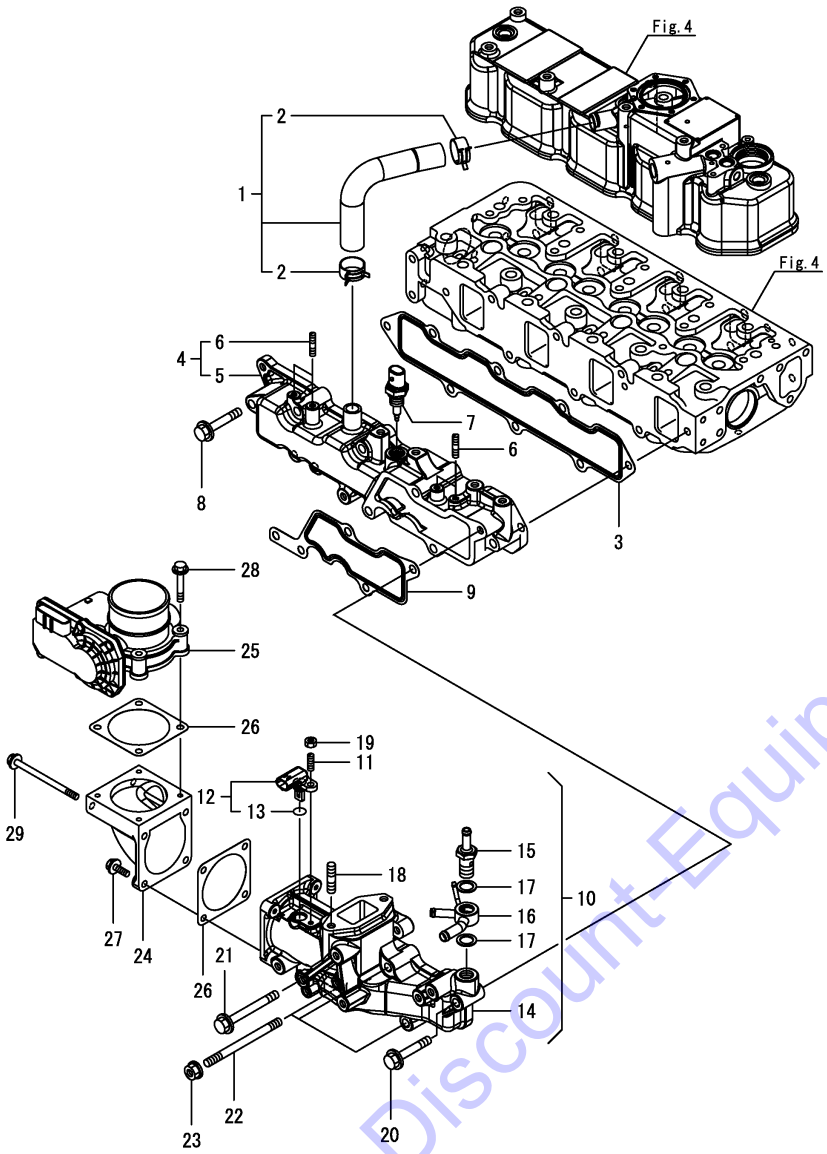

No.	Lev.	Parts No.	Description	Q'ty (A)	(B)	(C)	(D)	(E)	(F)	I	R
1	1	129005-03080	HOSE ASSY, BREATHER	1							
2	2	129410-03990	CLAMP, HOSE 21.5	2							
3	1	129C00-12110	GASKET, MANIFOLD	1							
4	1	129C00-12150	MANIFOLD ASSY,INTAKE	1							
5	2	129C00-12100	MANIFOLD, INTAKE	1							
6	2	26216-060202	STUD, M6X 20	4							
7	1	129A00-12721	SENSOR,AIR TEMP	1							1
8	1	26106-080502	BOLT, M8X 50 PLATED	5							
9	1	129A00-12810	GASKET, COLLECTOR	1							
10	1	129A00-12851	COLLECTOR ASSY	1							
11	2	119660-01570	STUD, M6X12	1							
12	2	129A00-12711	SENSOR, TEMPERATURE	1							
13	3	129A00-12790	O-RING, TEMP SENSOR	1							
14	2	129A00-12830	COLLECTOR, INTAKE	1							
15	2	129A00-59110	JOINT, HOSE M14	1							
16	2	129A00-59120	JOINT, HOSE 14	1							
17	2	22190-140002	WASHER, SEAL 14	2							
18	2	26216-080302	STUD, M8X 30	2							
19	2	26716-060002	NUT, M6	1							
20	1	26106-080502	BOLT, M8X 50 PLATED	1							
21	1	26106-080752	BOLT, M8X 75 PLATED	1							
22	1	26216-081052	STUD, M8X105	3							
23	1	26306-080002	NUT, M8	3							
24	1	129A00-12820	BEND, INTAKE	1							
25	1	129A00-12900	THROTTLE, INTAKE	1							1
26	1	129A00-12910	GASKET, THROTTLE	2							
27	1	26106-060202	BOLT, M6X 20 PLATED	2							
28	1	26106-060402	BOLT, M6X 40 PLATED	4							
29	1	26106-060902	BOLT, M6X 90 PLATED	2							

Remarks
(1)When replacing this part, it is necessary to update the software of the ECU using the designated service tool.
Please refer to the Service Manual for details.

N:Old $\xleftrightarrow[\text{No}]{\text{Yes}}$ New, Q:Old $\xleftrightarrow[\text{Yes}]{\text{No}}$ New, R:Old $\xleftrightarrow[\text{Yes}]{\text{Yes}}$ New, S:Old $\xleftrightarrow[\text{No}]{\text{No}}$ New, W:Add, Z:Discontinued, F:Interchangeable by set, K:Q'ty Change

Copyright (C) 2020 YANMAR GLOBAL CS CO., LTD. All RightsReserved.

Go to Discount-Equipment.com to order your parts

Fig.6. EXHAUST MANIFOLD

(A)=4TNV88C-DHKS1
(B)=
(C)=
(D)=
(E)=
(F)=

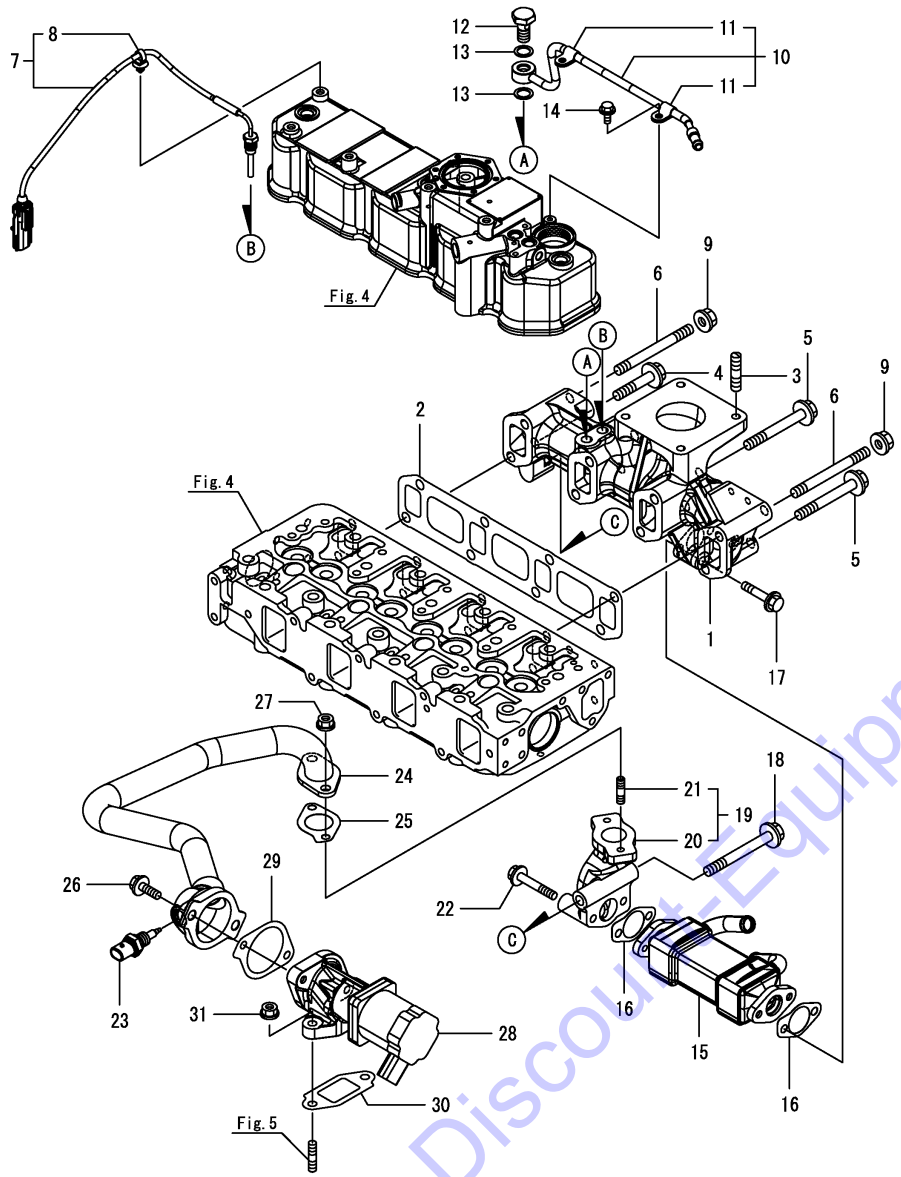

No.	Lev.	Parts No.	Description	Q'ty (A)	(B)	(C)	(D)	(E)	(F)	I	R
1	1	129C00-13100	MANIFOLD, EXHAUST	1							
2	1	129C00-13110	GASKET, MANIFOLD	1							
3	1	123900-13130	STUD, M10X22	4							
4	1	129A01-13601	BOLT, M10X50 10.9T	1							
5	1	129F01-13630	BOLT, M10X80 10.9T	5							
6	1	129A01-13700	STUD, 10X80 10.9	2							
7	1	129A00-13770	SENSOR, TEMPERATURE	1							1
8	2	129A00-91200	CLIP, BAND	1							
9	1	26306-100002	NUT, M10	2							
10	1	129A00-13300	PIPE ASSY, PRESSURE	1							
11	2	23297-080061	CLAMP, A8X 6	2							
12	1	129A00-13350	BOLT, PIPE JOINT	1							
13	1	23414-120000	GASKET, 12X1.0	2							
14	1	26106-060122	BOLT, M6X 12 PLATED	2							
15	1	129A00-13400	COOLER, EGR	1							
16	1	129A00-13410	GASKET, EGR COOLER	2							
17	1	129F01-13600	BOLT, M10X90 10.9T	1							
18	1	129E00-13620	BOLT, M8X40 10.9	2							
19	1	129A00-13851	PIPE, EGR OUTLET	1							
20	2	129A00-13861	PIPE, EGR OUTLET	1							
21	2	129418-18320	STUD, M8X20	2							
22	1	26106-080502	BOLT, M8X 50 PLATED	2							
23	1	129A00-13752	SENSOR,EGR GAS TEMP	1							1
24	1	129C00-13800	PIPE, EGR	1							
25	1	129927-13810	GASKET, EGR PIPE	1							
26	1	26106-080252	BOLT, M8X 25 PLATED	2							
27	1	26306-080002	NUT, M8	2							
28	1	129C00-13901	VALVE, EGR	1							1
29	1	129A00-13910	GASKET, EGR-V INLET	1							
30	1	129A00-13920	GASKET, EGR-V OUTLET	1							
31	1	26306-080002	NUT, M8	2							

Remarks
(1)When replacing this part, it is necessary to update the software of the ECU using the designated service tool.
Please refer to the Service Manual for details.

N:Old ←Yes/No→ New, Q:Old ←No/Yes→ New, R:Old ←Yes/Yes→ New, S:Old ←No/No→ New, W:Add, Z:Discontinued, F:Interchangeable by set, K:Q'ty Change

Copyright (C) 2020 YANMAR GLOBAL CS CO., LTD. All RightsReserved.

Go to Discount-Equipment.com to order your parts

Fig.7. DIESEL PARTICULATE FILTER(DPF)

(A)=4TNV88C-DHKS1
(B)=
(C)=
(D)=
(E)=
(F)=

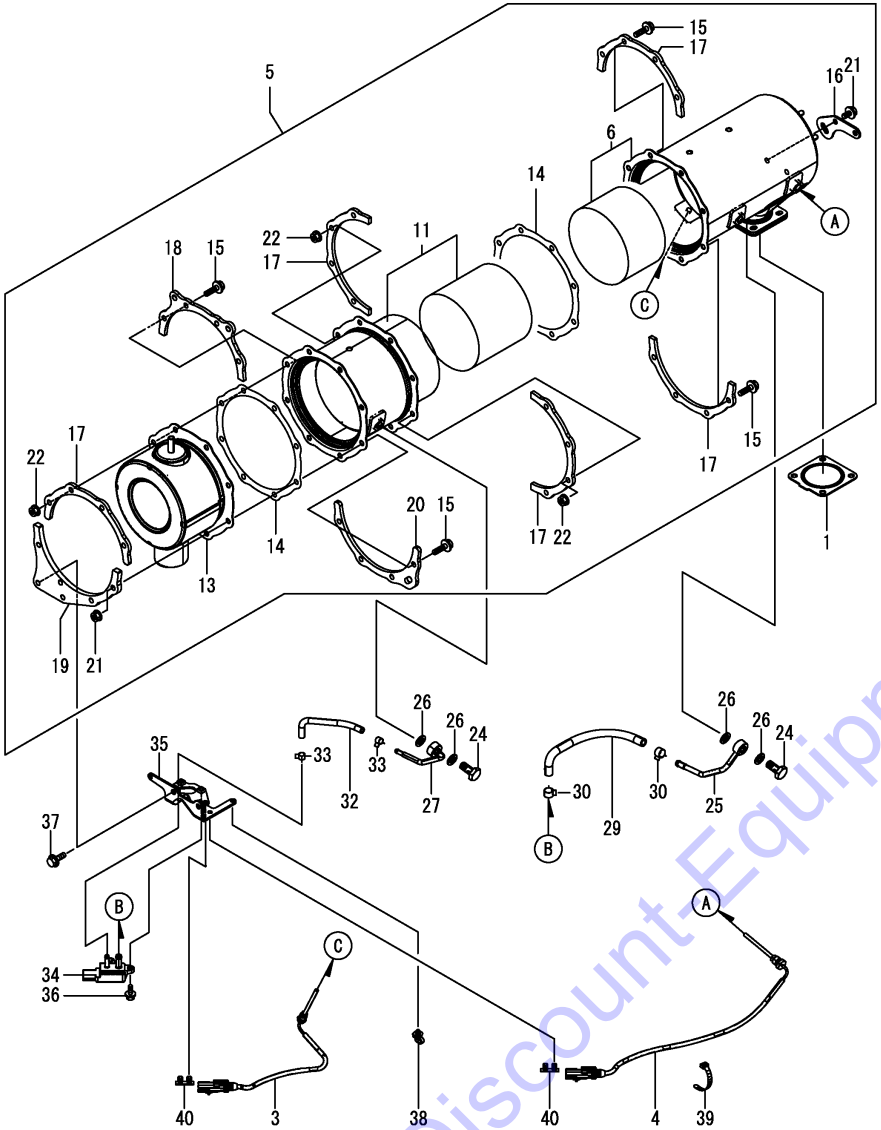

No.	Lev.	Parts No.	Description	Q'ty (A)	(B)	(C)	(D)	(E)	(F)	I	R
1	1	129930-13201	GASKET, SILENCER	1							
3	1	129C00-13870	SENSOR, ATD TEMP.DS+	1							1
4	1	129C00-13880	SENSOR, ATD TEMP.DS+	1							1
5	1	129C20-16090	DPF ASSY	1							1
6	2	129C20-16290	CASE, DOC	1							1
11	2	129C00-16400	CASE, SOOT FILTER	1							1
13	2	129C22-16500	SILENCER, DPF	1							
14	2	129A00-16600	GASKET, DPF	2							
15	2	129A00-16610	BOLT, M8X28 10.9T	16							
16	2	129C01-16690	LIFTER, DPF	1							
17	2	129A00-16700	STIFFENER, DPF A	5							
18	2	129C20-16700	STIFFENER, DPF B	1							
19	2	129A00-16730	STIFFENER, DPF C	1							
20	2	129A00-16740	STIFFENER, DPF C	1							
21	2	26106-080142	BOLT, M8X 14 PLATED	2							
22	2	26306-080002	NUT, M8	16							
24	1	129A00-13350	BOLT, PIPE JOINT	2							
25	1	129A00-17300	PIPE, SENSOR	1							
26	1	129A00-17311	GASKET, SENSOR	4							
27	1	129A00-17350	PIPE, SENSOR	1							
29	1	129C00-17500	HOSE,PRES EXH	1							
30	1	129A00-17520	CLIP, HOSE	2							
32	1	129A00-17551	HOSE, PRESSURE	1							
33	1	129A00-17570	CLIP, HOSE	2							
34	1	129978-17700	SENSOR, PRESSURE	1							1
35	1	129A00-17760	BRACKET, SENSOR	1							
36	1	26106-060162	BOLT, M6X 16 PLATED	2							
37	1	26106-080202	BOLT, M8X 20 PLATED	2							
38	1	129A00-91200	CLIP, BAND	1							
39	1	129C00-91200	BAND	1							
40	1	129A00-91430	CLIP, CONNECTOR	2							

Remarks
(1)When replacing this part, it is necessary to update the software of the ECU using the designated service tool.
Please refer to the Service Manual for details.

N:Old ←Yes/No→ New, Q:Old ←No/Yes→ New, R:Old ←Yes/Yes→ New, S:Old ←No/No→ New, W:Add, Z:Discontinued, F:Interchangeable by set, K:Q'ty Change

Copyright (C) 2020 YANMAR GLOBAL CS CO., LTD. All RightsReserved.

Go to Discount-Equipment.com to order your parts

Fig.8. CAMSHAFT & DRIVING GEAR

(A)=4TNV88C-DHKS1 (D)=
(B)= (E)=
(C)= (F)=

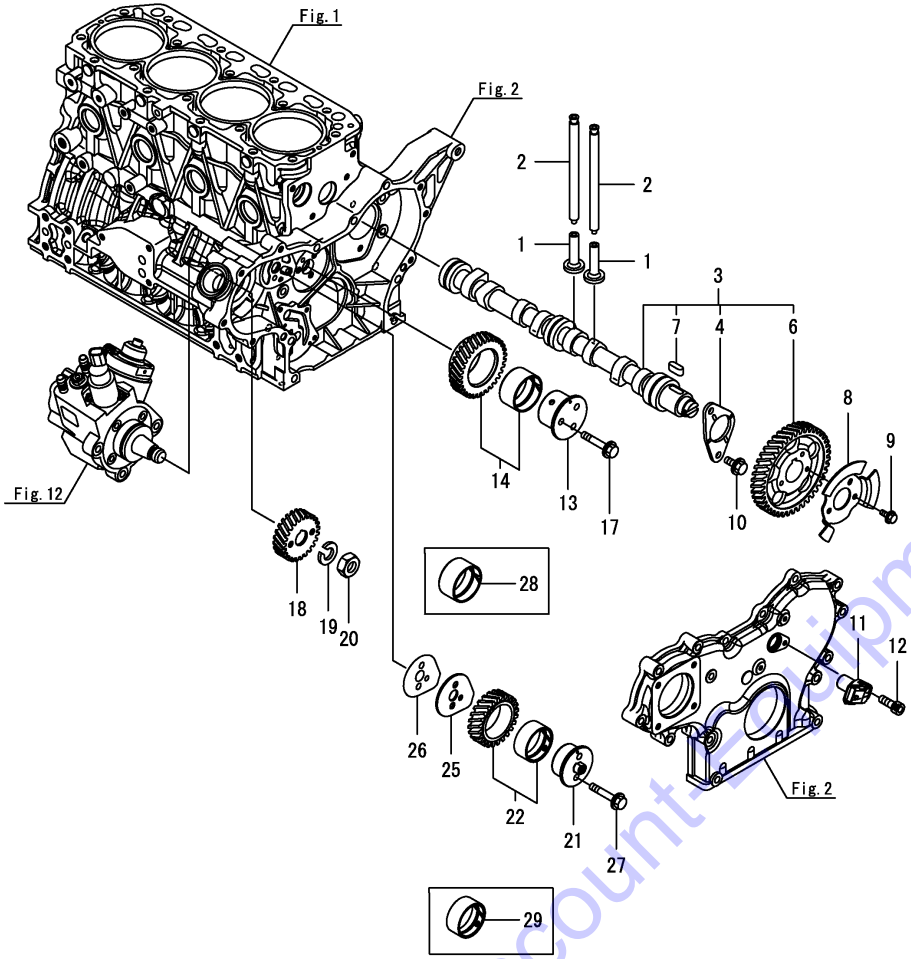

No.	Lev.	Parts No.	Description	Q'ty (A)	(B)	(C)	(D)	(E)	(F)	I	R
1	1	129150-14200	TAPPET	8							
2	1	129150-14400	ROD, PUSH L=178	8							
3	1	129C00-14580	CAMSHAFT ASSY	1							
4	2	129150-02450	METAL, THRUST	1							
6	2	129A00-14100	GEAR, CAMSHAFT	1							
7	2	22512-070140	KEY, 7X 14	1							
8	1	129A00-14701	PULSER, CAMSHAFT	1							
9	1	26106-060102	BOLT, M6X 10 PLATED	3							
10	1	26106-080142	BOLT, M8X 14 PLATED	2							
11	1	129A00-14710	SENSOR, ROTATION	1							
12	1	26450-060162	BOLT, M6X 16	1							
13	1	129A00-25050	SHAFT, IDLE GEAR A	1							
14	1	129A00-25110	GEAR ASSY, IDLE A	1							
17	1	26106-080452	BOLT, M8X 45 PLATED	3							
18	1	129A00-25900	GEAR, SUPPLY PUMP	1							
19	1	22217-180000	WASHER, SPRING 18	1							
20	1	26776-180002	NUT, LOCK M18	1							
21	1	129A00-25060	SHAFT, IDLE GEAR B	1							
22	1	129A00-25120	GEAR ASSY, IDLE B	1							
25	1	129A00-25200	PLATE, IDLE SHAFT B	1							
26	1	129A00-25210	GASKET, IDLE SHAFT B	1							
27	1	26106-080402	BOLT, M8X 40 PLATED	2							
28	1	119802-25071	BUSH, IDLE GEAR	1							1
29	1	129A00-25080	BUSH, IDLE GEAR B	1							1

Remarks
(1)Spare parts.

N:Old $\frac{\text{Yes}}{\text{No}}$ New, Q:Old $\frac{\text{No}}{\text{Yes}}$ New, R:Old $\frac{\text{Yes}}{\text{Yes}}$ New, S:Old $\frac{\text{No}}{\text{No}}$ New, W:Add, Z:Discontinued, F:Interchangeable by set, K:Q'ty Change

Copyright (C) 2020 YANMAR GLOBAL CS CO., LTD. All RightsReserved.

Go to Discount-Equipment.com for your parts

Fig.9. CRANKSHAFT & PISTON

(A)=4TNV88C-DHKS1 (D)=
(B)= (E)=
(C)= (F)=

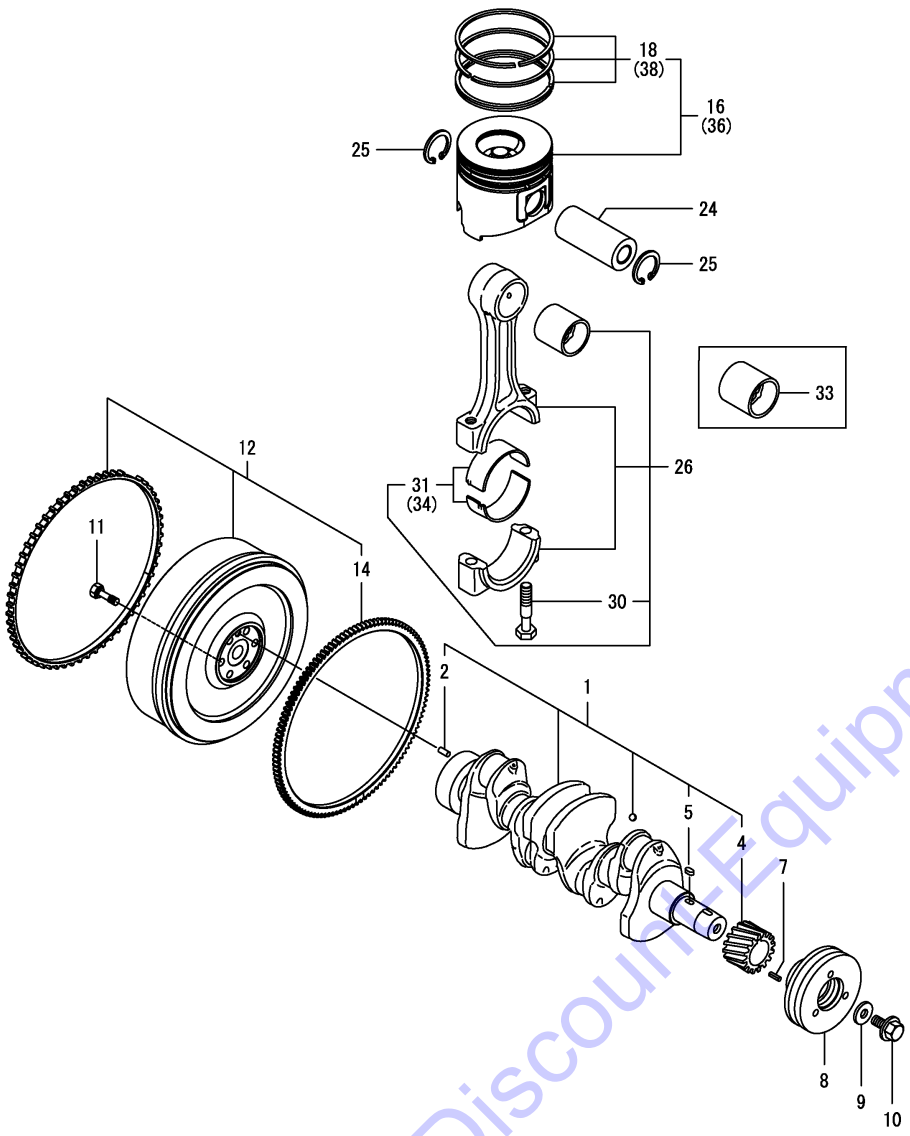

No.	Lev.	Parts No.	Description	Q'ty (A)	(B)	(C)	(D)	(E)	(F)	I	R
1	1	129604-21000	CRANKSHAFT ASSY	1							
2	2	129100-01580	PIN, PARALLEL 8X16	1							
4	2	119803-21200	GEAR, CRANKSHAFT	1							
5	2	22512-070140	KEY, 7X 14	1							
7	1	22351-030010	PIN, SPRING 3.0X10	1							
8	1	119802-21650	V-PULLEY, CRANKSHAFT	1							
9	1	129795-21661	WASHER, 14	1							
10	1	121850-21680	BOLT, V-PULLEY	1							
11	1	121111-21501	BOLT, FLYWHEEL	6							
12	1	129C20-21560	FLYWHEEL ASSY	1							
14	2	119865-21600	GEAR, RING Z=116	1							
16	1	129C00-22080	PISTON ASSY	4							
18	2	129A00-22500	RING SET, PISTON	4							
24	1	129202-22300	PIN, PISTON D26 L70	4							
25	1	22252-000260	RING, 26	8							
26	1	729402-23100	ROD ASSY, CONNECTING	4							
30	2	121550-23200	BOLT, CONNECTING ROD	8							
31	2	129150-23601	METAL ASSY,CRANK PIN	4							
33	1	129100-23910	METAL, PISTON PIN	4							1
34	1	129150-23611	METAL, CRANK PIN .25	4							2
36	1	129C00-22900	PISTON ASSY, 0.25 OS	4							3
38	2	129A00-22950	RING SET, PISTON .25	4							3

Remarks
(1)Spare parts.
(2)Under-sized(U.S.=0.25) parts.
(3)Over-sized(O.S.=0.25) parts.

N:Old $\frac{\text{Yes}}{\text{No}}$ New, Q:Old $\frac{\text{No}}{\text{Yes}}$ New, R:Old $\frac{\text{Yes}}{\text{Yes}}$ New, S:Old $\frac{\text{No}}{\text{No}}$ New, W:Add, Z:Discontinued, F:Interchangeable by set, K:Q'ty Change

Copyright (C) 2020 YANMAR GLOBAL CS CO., LTD. All RightsReserved.

Go to DiscountEquipment.com to order your parts

Fig.10. LUB. OIL SYSTEM

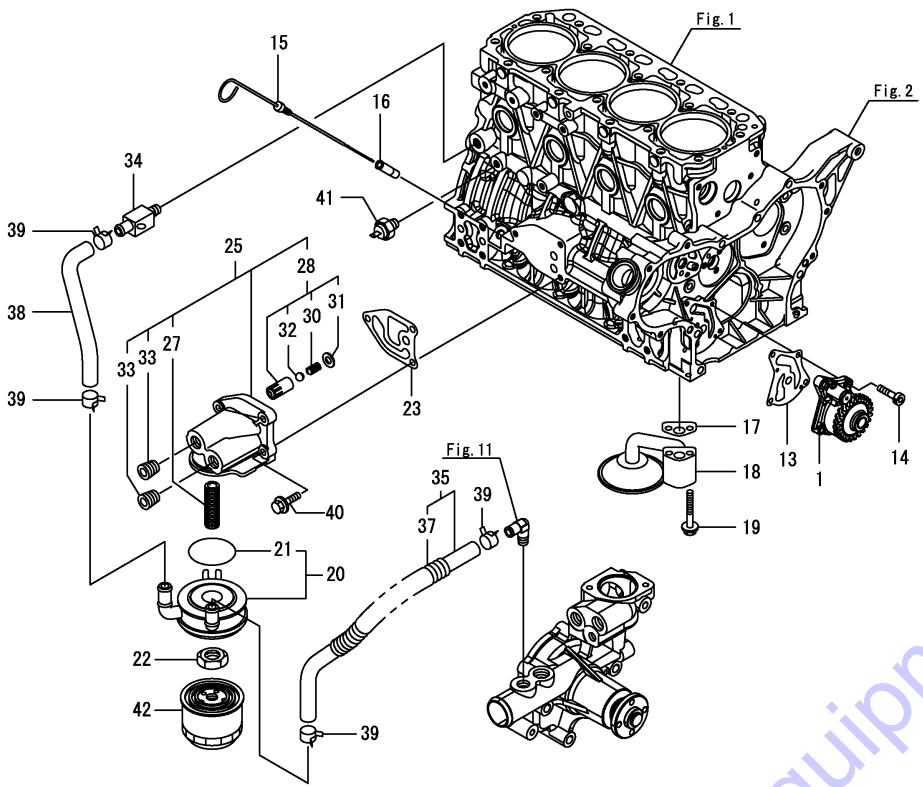

(A)=4TNV88C-DHKS1 (D)=
(B)= (E)=
(C)= (F)=

No.	Lev.	Parts No.	Description	Q'ty (A)	(B)	(C)	(D)	(E)	(F)	I	R
1	1	129C00-32000	PUMP ASSY, OIL	1							
13	1	129486-32020	GASKET, PUMP	1							
14	1	26450-060252	BOLT, M6X 25	4							
15	1	129004-34802	DIPSTICK, OIL	1							
16	1	121520-34810	GUIDE, DIPSTICK	1							
17	1	129150-35042	GASKET, INLET PIPE	1							
18	1	129436-35070	PIPE ASSY, OIL INLET	1							
19	1	26106-080552	BOLT, M8X 55 PLATED	2							
20	1	129067-33011	COOLER ASSY, OIL	1							
21	2	129508-33050	O-RING	1							
22	1	129417-33111	NUT, OIL COOLER	1							
23	1	129103-35122	GASKET, BRACKET	1							
25	1	129688-35170	BRACKET ASSY, FILTER	1							
27	2	129417-35150	STUD, M20X67	1							
28	2	129553-35500	VALVE ASSY, BYPASS	1							
30	3	129553-35520	SPRING, VALVE	1							
31	3	129553-35530	RETAINER, SPRING	1							
32	3	24190-130002	BALL, STEEL 13/32	1							
33	2	23875-040000	PLUG, R04	2							
34	1	129006-44480	JOINT, R02	1							
35	1	129467-49040	HOSE ASSY, WATER	1							
37	2	129165-49060	TUBE, CORRUGATED	1							
38	1	129615-49050	PIPE, COOLER INLET	1							
39	1	23000-022000	CLAMP, 22	4							
40	1	26106-080252	BOLT, M8X 25 PLATED	3							
41	1	119761-39450	SWITCH, HYDRAULIC	1							
42	1	129150-35153	FILTER ASSY, D80X80L	1							1

Remarks
(1)Spare parts.

N:Old $\overset{\text{Yes}}{\underset{\text{No}}{\leftrightarrow}}$ New, Q:Old $\overset{\text{No}}{\underset{\text{Yes}}{\leftrightarrow}}$ New, R:Old $\overset{\text{Yes}}{\underset{\text{Yes}}{\leftrightarrow}}$ New, S:Old $\overset{\text{No}}{\underset{\text{No}}{\leftrightarrow}}$ New, W:Add, Z:Discontinued, F:Interchangeable by set, K:Q'ty Change

Copyright (C) 2020 YANMAR GLOBAL CS CO., LTD. All RightsReserved.

Go to Discount-Equipment.com to order your parts

Fig.11. COOLING WATER SYSTEM

(A)=4TNV88C-DHKS1
(B)=
(C)=
(D)=
(E)=
(F)=

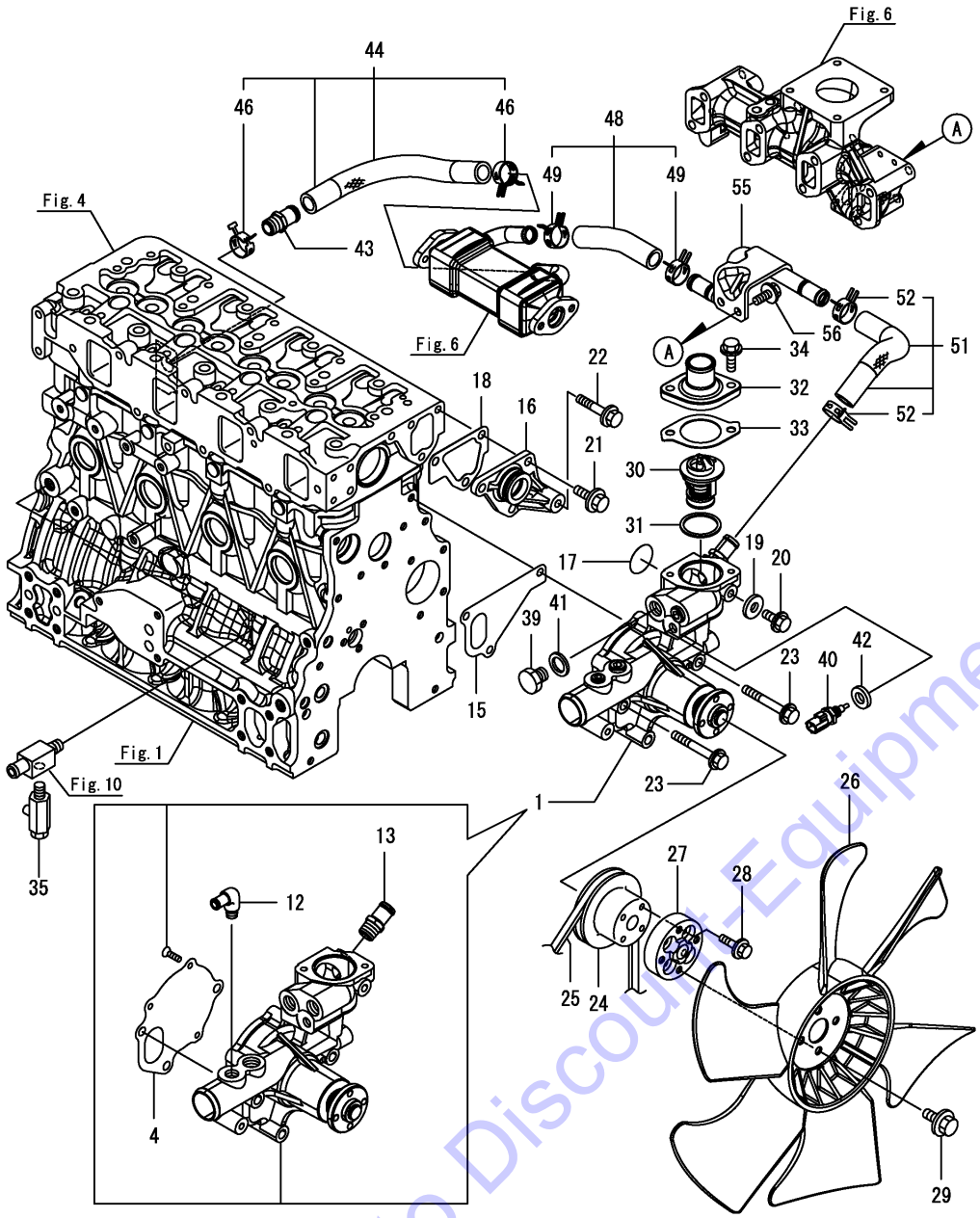

No.	Lev.	Parts No.	Description	Q'ty (A)	(B)	(C)	(D)	(E)	(F)	I	R
1	1	129A01-42001	PUMP ASSY, CW	1							
4	2	129100-42051	GASKET, WATER PUMP	1							
12	2	129103-49301	ELBOW, PT1/4	1							
13	2	129928-49420	JOINT	1							
15	1	129486-42021	GASKET, WATER PUMP	1							
16	1	129004-42040	JOINT, WATER PIPE	1							
17	1	129486-42140	O-RING, G30	1							
18	1	124395-49840	GASKET, THERMOSTAT	1							
19	1	23414-080000	GASKET, 8X1.0	1							
20	1	26106-080122	BOLT, M8X 12 PLATED	1							
21	1	26106-080162	BOLT, M8X 16 PLATED	3							
22	1	26106-080452	BOLT, M8X 45 PLATED	1							
23	1	26106-080602	BOLT, M8X 60 PLATED	3							
24	1	129550-42350	V-PULLEY, PUMP	1							
25	1	129612-42350	V-BELT, A38	1							
26	1	129916-44740	FAN, COOLING D=430	1							
27	1	129648-44771	SPACER, FAN 18MM	1							
28	1	26106-060222	BOLT, M6X 22 PLATED	4							
29	1	26106-080162	BOLT, M8X 16 PLATED	4							
30	1	129155-49801	THERMOSTAT, 71C	1							
31	1	129150-49811	GASKET, THERMOSTAT	1							
32	1	129350-49530	COVER, THERMOSTAT	1							
33	1	129795-49551	GASKET, COVER	1							
34	1	26106-080222	BOLT, M8X 22 PLATED	2							
35	1	119620-49290	COCK ASSY, 1/4	1							
39	1	121450-42450	PLUG, M16	1							
40	1	129927-44900	SENSOR, TEMPERATURE	1							1
41	1	124465-44950	GASKET, 16	1							
42	1	22190-120002	WASHER, SEAL 12	1							
43	1	129928-49420	JOINT	1							
44	1	129A00-49610	PIPE ASSY, EGR-C IN	1							
46	2	129960-03990	CLAMP, HOSE 19.8	2							
48	1	129C00-49610	PIPE ASSY, OUTLET A	1							
49	2	129960-03990	CLAMP, HOSE 19.8	2							
51	1	129C00-49620	PIPE ASSY, OUTLET B	1							
52	2	129960-03990	CLAMP, HOSE 19.8	2							
55	1	129C23-49700	PIPE ASSY, WATER	1							
56	1	26106-080162	BOLT, M8X 16 PLATED	2							

Remarks
(1)When replacing this part, it is necessary to update the software of the ECU using the designated service tool.
Please refer to the Service Manual for details.

N:Old ←Yes/No→ New, Q:Old ←No/Yes→ New, R:Old ←Yes/Yes→ New, S:Old ←No/No→ New, W:Add, Z:Discontinued, F:Interchangeable by set, K:Q'ty Change

Copyright (C) 2020 YANMAR GLOBAL CS CO., LTD. All RightsReserved.

Go to Discount-Equipment.com to order your parts

Fig.12. FUEL SUPPLY PUMP

(A)=4TNV88C-DHKS1
(B)=
(C)=
(D)=
(E)=
(F)=

No.	Lev.	Parts No.	Description	Q'ty (A)	(B)	(C)	(D)	(E)	(F)	I	R
1	1	129C28-51000	PUMP ASSY, FUEL	1							1
2	2	129A00-51100	VALVE ASSY	1							1
3	3	129A00-51110	RING, SEAL	1							
4	3	129A00-51120	O-RING, MPROP	1							
5	2	129A00-51130	BOLT, MPROP	2							
6	2	129A00-51200	SENSOR, TEMPERATURE	1							1
7	2	129A00-51900	O-RING, FUEL PUMP	1							
8	1	26106-080302	BOLT, M8X 30 PLATED	3							

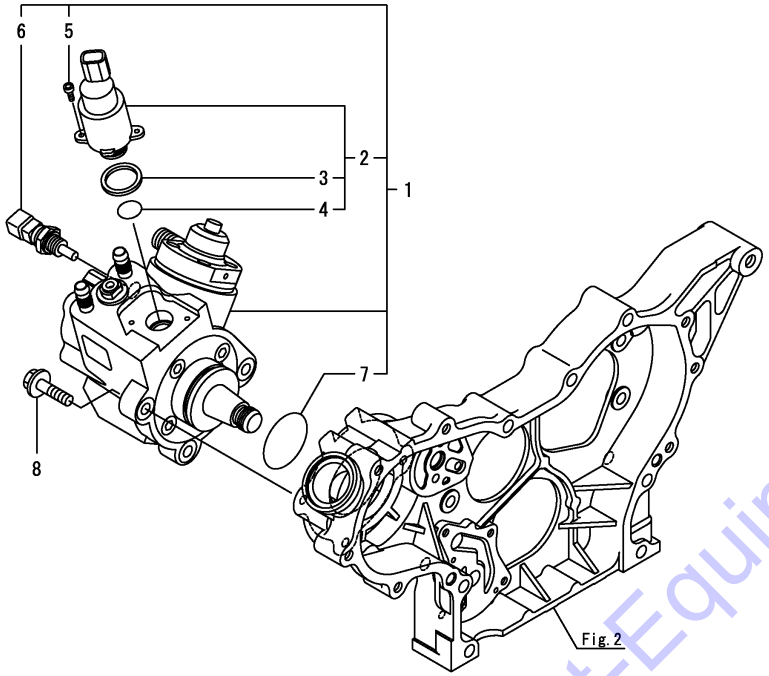

Remarks
(1)When replacing this part, it is necessary to update the software of the ECU using the designated service tool.
Please refer to the Service Manual for details.

N:Old $\xleftrightarrow[\text{No}]{\text{Yes}}$ New, Q:Old $\xleftrightarrow[\text{Yes}]{\text{No}}$ New, R:Old $\xleftrightarrow[\text{Yes}]{\text{Yes}}$ New, S:Old $\xleftrightarrow[\text{No}]{\text{No}}$ New, W:Add, Z:Discontinued, F:Interchangeable by set, K:Q'ty Change

Copyright (C) 2020 YANMAR GLOBAL CS CO., LTD. All RightsReserved.

Go to Discount-Equipment.com to order your parts

Fig.13. FUEL INJECTION VALVE

(A)=4TNV88C-DHKS1
(B)=
(C)=
(D)=
(E)=
(F)=

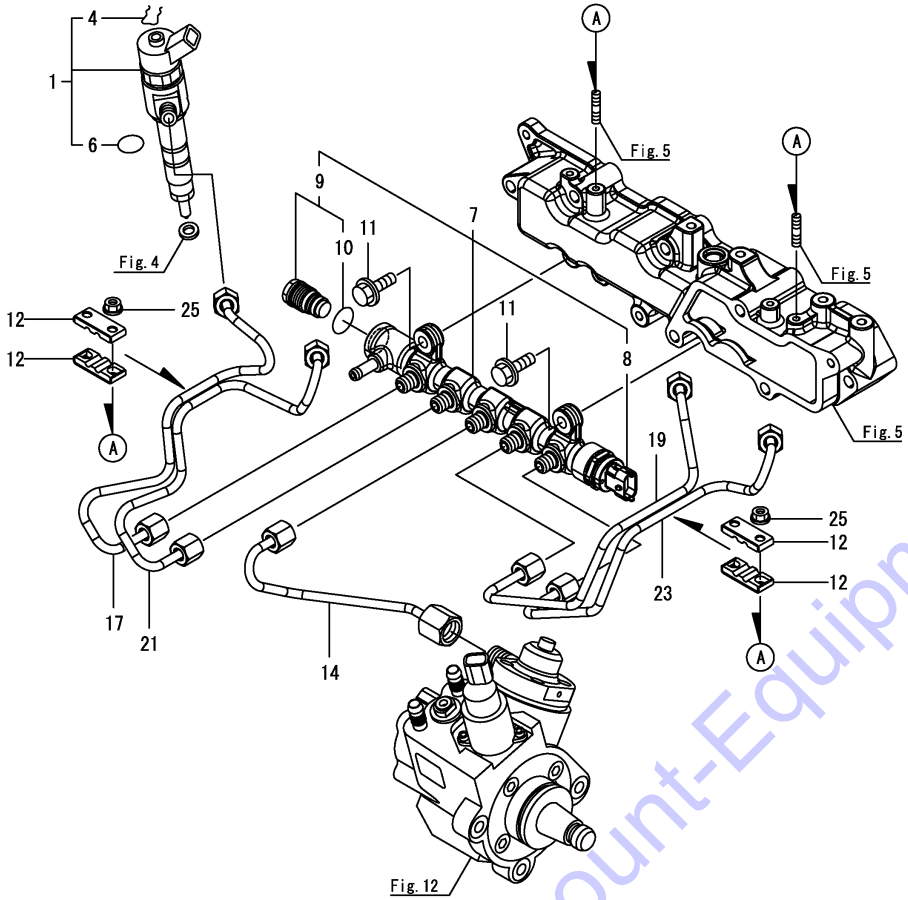

No.	Lev.	Parts No.	Description	Q'ty (A)	(B)	(C)	(D)	(E)	(F)	I	R
1	1	129A00-53100	INJECTOR, CR	4							1
4	2	129A00-53200	RING, RETAINING	4							
6	2	129C28-53300	O-RING	4							
7	1	129C00-57000	COMMON RAIL ASSY	1							1
8	2	129A00-57100	SENSOR, PRESSURE	1							1
9	2	129A00-57200	VALVE ASSY, PLV4	1							1
10	3	129A00-57210	O-RING, PLV4	1							
11	1	26106-080252	BOLT, M8X 25 PLATED	2							
12	1	122780-59100	RETAINER, PIPE	4							
14	1	129A00-59700	PIPE ASSY, RAIL IN	1							
17	1	129C00-59810	PIPE ASSY, INJECTION	1							
19	1	129A00-59820	PIPE ASSY, INJECTION	1							
21	1	129C00-59820	PIPE ASSY, INJECTION	1							
23	1	129A00-59830	PIPE ASSY, INJECTION	1							
25	1	26366-060002	NUT, M6	4							

Remarks
(1)When replacing this part, it is necessary to update the software of the ECU using the designated service tool.
Please refer to the Service Manual for details.

N:Old ◄Yes/No► New, Q:Old ◄No/Yes► New, R:Old ◄Yes/Yes► New, S:Old ◄No/No► New, W:Add, Z:Discontinued, F:Interchangeable by set, K:Q'ty Change

Copyright (C) 2020 YANMAR GLOBAL CS CO., LTD. All RightsReserved.

Go to Discount-Equipment.com to order your parts

Fig.14. FUEL PIPE

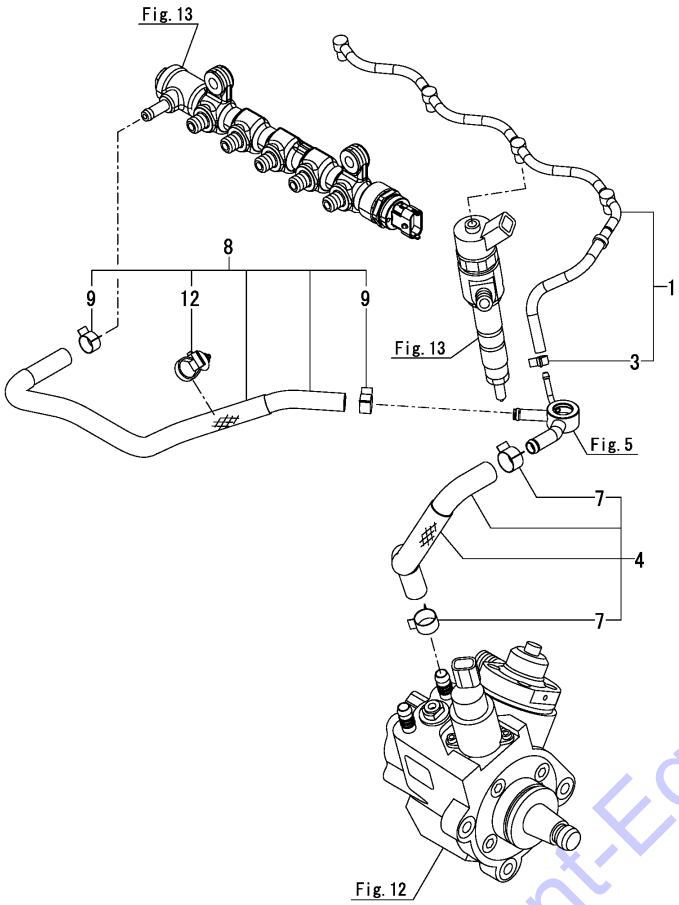

(A)=4TNV88C-DHKS1 (D)=
(B)= (E)=
(C)= (F)=

No.	Lev.	Parts No.	Description	Q'ty (A)	(B)	(C)	(D)	(E)	(F)	I	R
1	1	129677-59501	PIPE ASSY, RETURN	1							
3	2	23080-007000	CLAMP, 7	1							
4	1	129A00-59020	PIPE ASSY, RETURN	1							
7	2	23080-015000	CLAMP, 15	2							
8	1	129C00-59030	PIPE ASSY, RETURN	1							
9	2	114270-59010	CLAMP, HOSE 12	2							
12	2	129A00-91200	CLIP, BAND	1							

N:Old $\xleftarrow[\text{No}]{\text{Yes}}$ New, Q:Old $\xleftarrow[\text{Yes}]{\text{No}}$ New, R:Old $\xleftarrow[\text{Yes}]{\text{Yes}}$ New, S:Old $\xleftarrow[\text{No}]{\text{No}}$ New, W:Add, Z:Discontinued, F:Interchangeable by set, K:Q'ty Change

Copyright (C) 2020 YANMAR GLOBAL CS CO., LTD. All RightsReserved.

Go to Discount-Equipment.com to order your parts

Fig.15. STARTER MOTOR

(A)=4TNV88C-DHKS1 (D)=
(B)= (E)=
(C)= (F)=

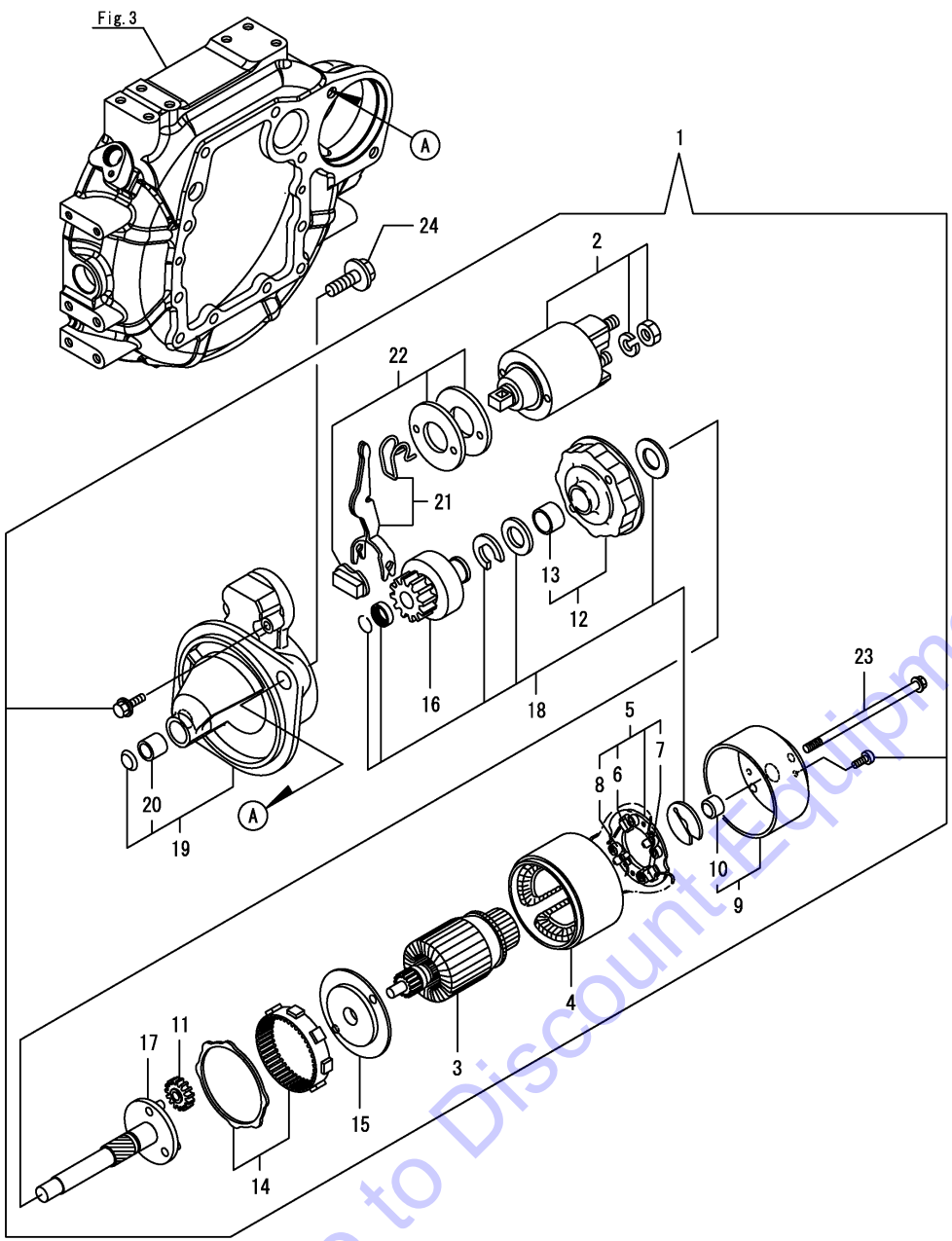

No.	Lev.	Parts No.	Description	Q'ty (A)	(B)	(C)	(D)	(E)	(F)	I	R
1	1	129242-77010	STARTER, 1.7	1							
2	2	129698-77020	SWITCH ASSY, MAGNET	1							
3	2	129242-77100	ARMATURE ASSY	1							
4	2	129242-77110	YOKE ASSY	1							
5	2	129242-77120	HOLDER ASSY, BRUSH	1							
6	3	129242-77130	BRUSH, -	2							
7	3	129242-77140	BRUSH SET	1							
8	3	129242-77150	SPRING, BRUSH	4							
9	2	129242-77160	COVER ASSY, STARTER	1							
10	3	129242-77170	METAL, REAR COVER	1							
11	2	118400-77170	GEAR, PLANETARY	3							
12	2	129242-77180	BRACKET, CENTER P	1							
13	3	129698-77190	BRACKET, CENTER	1							
14	2	129698-77200	GEAR, INTERNAL	1							
15	2	129242-77210	BRACKET, CENTER A	1							
16	2	129698-77220	PINION ASSY	1							
17	2	129698-77230	SHAFT, PINION	1							
18	2	129698-77250	WASHER SET	1							
19	2	129242-77260	CASE ASSY, GEAR	1							
20	3	X2114535200	METAL, STARTER	1							
21	2	129242-77270	LEVER SET, SHIFT	1							
22	2	129242-77280	COVER KIT, DUST	1							
23	2	124195-77770	BOLT, THROUGH	2							
24	1	26106-120252	BOLT, M12X 25 PLATED	2							

N:Old ←Yes/No→ New, Q:Old ←No/Yes→ New, R:Old ←Yes/Yes→ New, S:Old ←No/No→ New, W:Add, Z:Discontinued, F:Interchangeable by set, K:Q'ty Change

Copyright (C) 2020 YANMAR GLOBAL CS CO., LTD. All RightsReserved.

Go to Discount-Equipment.com to order your parts

Fig.16. GENERATOR

(A)=4TNV88C-DHKS1
(B)=
(C)=
(D)=
(E)=
(F)=

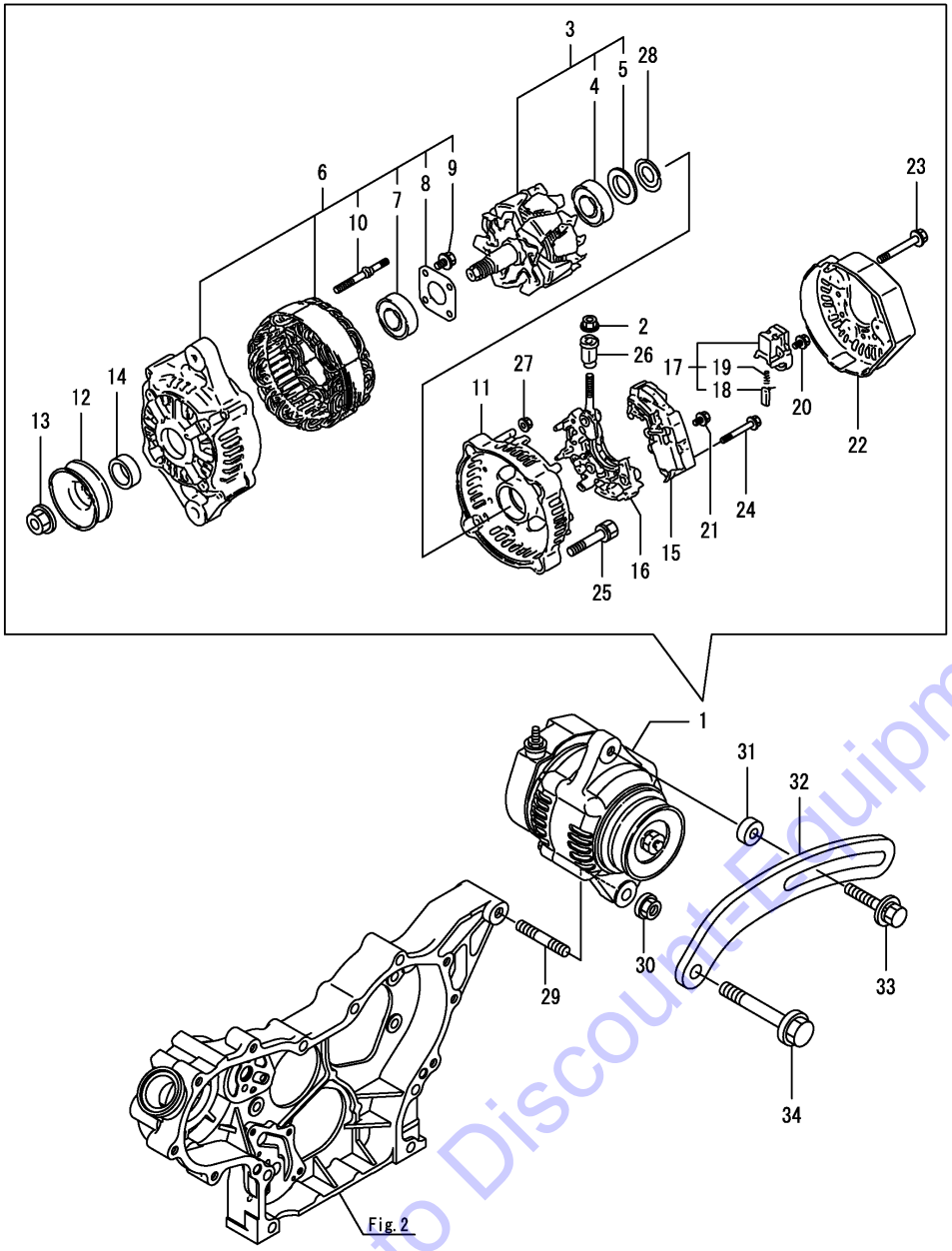

No.	Lev.	Parts No.	Description	Q'ty (A)	(B)	(C)	(D)	(E)	(F)	I	R
1	1	129423-77210	ALTERNATOR, 12V-40A	1							
2	2	129240-79310	NUT	1							
3	2	119620-77380	ROTOR ASSY	1							
4	3	123501-79240	BEARING, BALL	1							
5	3	119620-79250	COVER, BEARING	1							
6	2	119620-77421	FRAME ASSY, DRIVE	1							
7	3	119620-79200	BEARING, BALL	1							
8	3	119620-79210	PLATE, RETAINER	1							
9	3	119620-79220	SCREW	4							
10	3	119620-79230	STUD	2							
11	2	119620-77440	FRAME ASSY, REAR	1							
12	2	119620-77461	PULLEY, GENERATOR	1							
13	2	119620-77471	NUT	1							
14	2	119620-77490	COLLAR	1							
15	2	129423-77730	REGULATOR ASSY	1							
16	2	119620-79260	HOLDER ASSY	1							
17	2	129052-79270	HOLDER ASSY, BRUSH	1							
18	3	119620-77480	BRUSH ASSY, SUB	2							
19	3	119620-79280	SPRING	2							
20	2	119620-79290	SCREW	6							
21	2	119620-79300	SCREW	1							
22	2	129240-79300	COVER	1							
23	2	119620-79310	BOLT	3							
24	2	119620-79320	SCREW, W/WASHER	2							
25	2	119620-79330	BOLT	2							
26	2	119620-79340	BUSH, INSULATION	1							
27	2	119620-79350	NUT	2							
28	2	119620-79360	WASHER, THRUST	1							
29	1	129795-01900	BOLT, M10X33	1							
30	1	26306-100002	NUT, M10	1							
31	1	119940-77270	SPACER, GENERATOR	1							
32	1	119802-77330	ADJUSTER, BELT	1							
33	1	129972-77341	BOLT, ADJUSTER L=50	1							
34	1	26106-080452	BOLT, M8X 45 PLATED	1							

N:Old ←Yes/No→ New, Q:Old ←No/Yes→ New, R:Old ←Yes/Yes→ New, S:Old ←No/No→ New, W:Add, Z:Discontinued, F:Interchangeable by set, K:Q'ty Change

Copyright (C) 2020 YANMAR GLOBAL CS CO., LTD. All RightsReserved.

Go to Discount-Equipment.com to order your parts

Fig.17. ELECTRONIC CONTROL UNIT (ECU)

(A)=4TNV88C-DHKS1 (D)=
(B)= (E)=
(C)= (F)=

No.	Lev.	Parts No.	Description	Q'ty (A)	(B)	(C)	(D)	(E)	(F)	I	R
1	1	129C20-75061	ECU ASSY,4-88C-DHKS	1							1
12	1	129A00-75910	ECU ASSY,SERVICE YMR	1							2

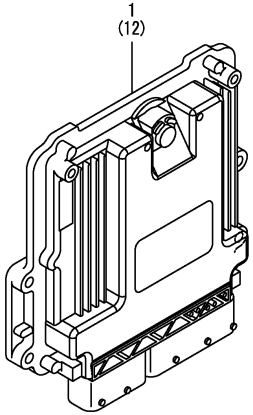

Remarks
(1)Eco ECU
This part cannot be ordered.
Replace the part using a Service ECU with the proper engine information installed.
(2)Service ECU
When replacing this part, it is necessary to update the software of the ECU using the designated service tool.
Please refer to the Service Manual for details.

N:Old ◄Yes/No► New, Q:Old ◄No/Yes► New, R:Old ◄Yes/Yes► New, S:Old ◄No/No► New, W:Add, Z:Discontinued, F:Interchangeable by set, K:Q'ty Change

Copyright (C) 2020 YANMAR GLOBAL CS CO., LTD. All RightsReserved.

Go to Discount-Equipment.com to order your parts

Fig.18. ELECTRIC PARTS

(A)=4TNV88C-DHKS1
(B)=
(C)=
(D)=
(E)=
(F)=

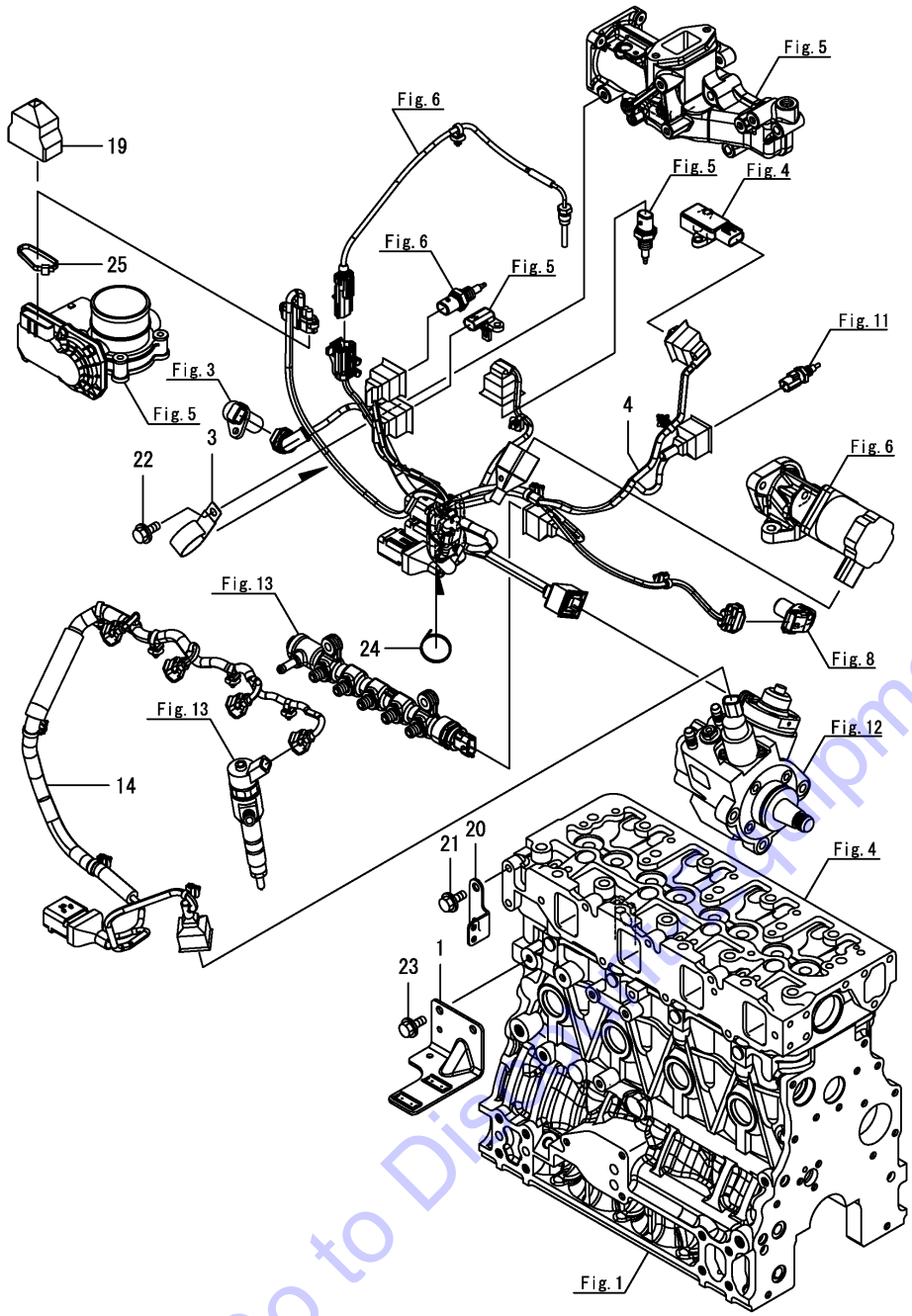

No.	Lev.	Parts No.	Description	Q'ty (A)	(B)	(C)	(D)	(E)	(F)	I	R
1	1	129A00-77930	BRACKET, CONNECTOR	1							
3	1	129928-79700	CLAMP, 150-M8	1							
4	1	129C00-91223	HARNESS, B T4	1							
14	1	129C00-91232	HARNESS, C T4	1							
19	1	129A00-91451	BOOT, CAP TYPE	1							
20	1	129A00-91600	BRACKET, HARNESS	1							
21	1	26106-080122	BOLT, M8X 12 PLATED	2							
22	1	26106-080122	BOLT, M8X 12 PLATED	1							
23	1	26106-080122	BOLT, M8X 12 PLATED	2							
24	1	29621-100000	BAND, TR100	1							
25	1	29621-200000	BAND	1							

N:Old ◄Yes/No► New, Q:Old ◄No/Yes► New, R:Old ◄Yes/Yes► New, S:Old ◄No/No► New, W:Add, Z:Discontinued, F:Interchangeable by set, K:Q'ty Change

Copyright (C) 2020 YANMAR GLOBAL CS CO., LTD. All RightsReserved.

Go to Displayequipment.com to order your parts

Fig.19. ACCESSORY

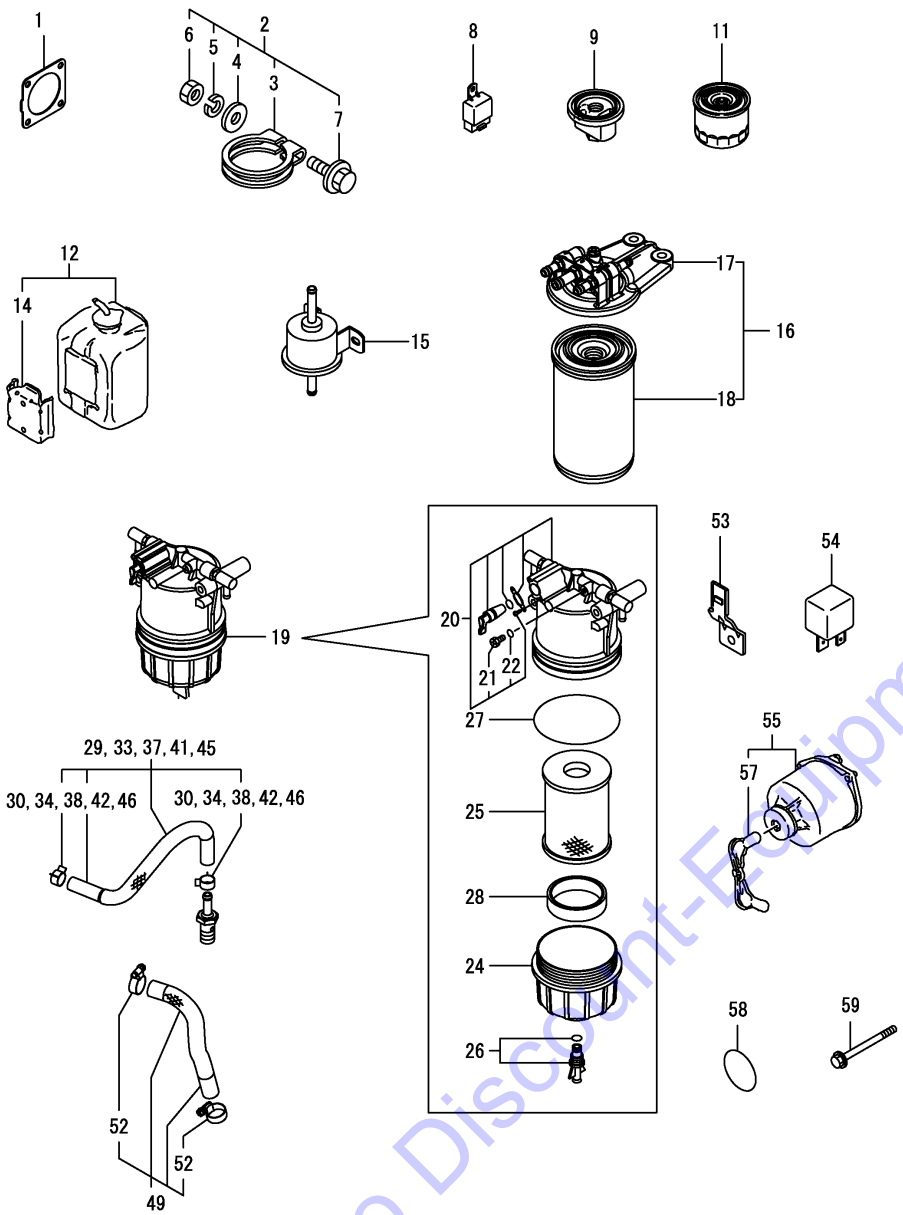

(A)=4TNV88C-DHKS1
(B)=
(C)=
(D)=
(E)=
(F)=

No.	Lev.	Parts No.	Description	Q'ty (A)	(B)	(C)	(D)	(E)	(F)	I	R
1	1	128300-13230	GASKET, SILENCER	1							
2	1	129640-13590	CLAMP ASSY	1							
3	2	129640-13580	CLAMP	1							
4	2	22117-100000	WASHER, 10	1							
5	2	22217-100000	WASHER, SPRING 10	1							
6	2	26106-100652	BOLT, M10X 65 PLATED	1							
7	2	26706-100002	NUT, M10	1							
8	1	172B02-17150	RELAY, CA TYPE C	1							
9	1	129238-35111	PLUG	1							
11	1	129150-35153	FILTER ASSY, D80X80L	1							
12	1	720445-44200	TANK ASSY, SUB	1							
14	2	120445-44540	BRACKET, SUB TANK	1							
15	1	129612-52100	PUMP, FUEL FEED	1							
16	1	129A00-55600	FILTER ASSY, FUEL	1							
17	2	129A00-55610	BRACKET ASSY, FILTER	1							
18	2	129A00-55800	FILTER, FUEL	1							
19	1	129E22-55700	FILTER ASSY,FUEL PRE	1							
20	2	129E00-55710	BODY ASSY	1							
21	3	129A00-55751	PLUG, AIR VENT	1							
22	3	129A00-55760	O-RING	1							
24	2	129A00-55720	CUP, CLEAR	1							
25	2	129A00-55730	ELEMENT, FUEL FILTER	1							
26	2	129242-55740	PLUG, DRAIN	1							
27	2	129A00-55740	O-RING	1							
28	2	129A00-55770	FLOAT	1							
29	1	129C21-59010	HOSE ASSY, FUEL	1							
30	2	114270-59010	CLAMP, HOSE 12	2							
33	1	129C21-59020	HOSE ASSY, FUEL	1							
34	2	114270-59010	CLAMP, HOSE 12	2							
37	1	129C21-59030	HOSE ASSY, FUEL	1							
38	2	114270-59010	CLAMP, HOSE 12	2							
41	1	129C21-59040	HOSE ASSY, FUEL	1							
42	2	114270-59010	CLAMP, HOSE 12	2							
45	1	129C21-59050	HOSE ASSY, FUEL	1							
46	2	114270-59010	CLAMP, HOSE 12	2							
49	1	129C21-59060	HOSE ASSY, FUEL	1							
52	2	23080-015000	CLAMP, 15	2							
53	1	129927-77910	BRACKET, CONNECTOR	2							
54	1	129927-77920	RELAY, ISO 70A	2							
55	1	129115-91250	SWITCH ASSY, STARTER	1							
57	2	129115-91270	KEY ASSY	1							
58	1	24321-000600	O-RING, 1AG60.0	1							
59	1	26106-080952	BOLT, M8X 95 PLATED	2							

Remarks
(1)Optional parts.

N:Old $\xleftrightarrow[\text{No}]{\text{Yes}}$ New, Q:Old $\xleftrightarrow[\text{Yes}]{\text{No}}$ New, R:Old $\xleftrightarrow[\text{Yes}]{\text{Yes}}$ New, S:Old $\xleftrightarrow[\text{No}]{\text{No}}$ New, W:Add, Z:Discontinued, F:Interchangeable by set, K:Q'ty Change

Copyright (C) 2020 YANMAR GLOBAL CS CO., LTD. All RightsReserved.

Go to Discount-Equipment.com to order your parts

Fig.20. GASKET SET

(A)=4TNV88C-DHKS1 (D)=
(B)= (E)=
(C)= (F)=

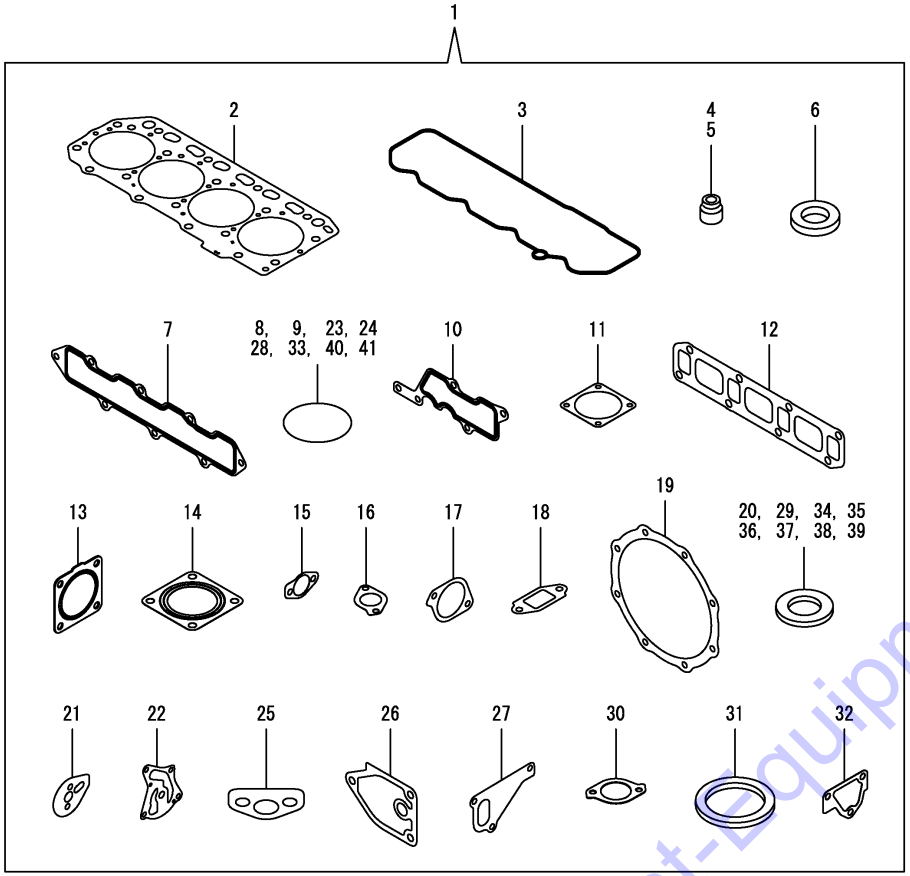

No.	Lev.	Parts No.	Description	Q'ty (A)	(B)	(C)	(D)	(E)	(F)	I	R
1	1	129C20-92620	GASKET SET	1							1
2	2	129685-01350	GASKET, HEAD	1							
3	2	129C00-11310	GASKET, BONNET	1							
4	2	124460-11340	SEAL, VALVE STEM	4							
5	2	129A00-11340	SEAL, VALVE STEM	4							
6	2	129978-11871	GASKET, INJECTOR	4							
7	2	129C00-12110	GASKET, MANIFOLD	1							
8	2	129A00-12780	O-RING, EGR SENSOR	2							
9	2	129A00-12790	O-RING, TEMP SENSOR	1							
10	2	129A00-12810	GASKET, COLLECTOR	1							
11	2	129A00-12910	GASKET, THROTTLE	2							
12	2	129C00-13110	GASKET, MANIFOLD	1							
13	2	129930-13201	GASKET, SILENCER	1							
14	2	128300-13230	GASKET, SILENCER	1							
15	2	129A00-13410	GASKET, EGR COOLER	2							
16	2	129927-13810	GASKET, EGR PIPE	1							
17	2	129A00-13910	GASKET, EGR-V INLET	1							
18	2	129A00-13920	GASKET, EGR-V OUTLET	1							
19	2	129A00-16600	GASKET, DPF	2							
20	2	129A00-17311	GASKET, SENSOR	4							
21	2	129A00-25210	GASKET, IDLE SHAFT B	1							
22	2	129486-32020	GASKET, PUMP	1							
23	2	119609-32040	O-RING, P16	2							
24	2	119624-32040	O-RING, P12.0	1							
25	2	129150-35042	GASKET, INLET PIPE	1							
26	2	129150-35111	GASKET, BRACKET	1							
27	2	129486-42021	GASKET, WATER PUMP	1							
28	2	129486-42140	O-RING, G30	1							
29	2	124465-44950	GASKET, 16	1							
30	2	129795-49551	GASKET, COVER	1							
31	2	129150-49811	GASKET, THERMOSTAT	1							
32	2	124395-49840	GASKET, THERMOSTAT	1							
33	2	129A00-51900	O-RING, FUEL PUMP	1							
34	2	22190-080002	WASHER, SEAL 8	1							
35	2	22190-120002	WASHER, SEAL 12	1							
36	2	22190-140002	WASHER, SEAL 14	2							
37	2	22190-220002	WASHER, SEAL 22	1							
38	2	23414-080000	GASKET, 8X1.0	1							
39	2	23414-120000	GASKET, 12X1.0	2							
40	2	24311-000120	O-RING, 1AP12.0	3							
41	2	24311-000320	O-RING, 1AP32.0	3							

Remarks
(1)Optional parts.

N:Old $\overset{\text{Yes}}{\underset{\text{No}}{\leftrightarrow}}$ New, Q:Old $\overset{\text{No}}{\underset{\text{Yes}}{\leftrightarrow}}$ New, R:Old $\overset{\text{Yes}}{\underset{\text{Yes}}{\leftrightarrow}}$ New, S:Old $\overset{\text{No}}{\underset{\text{No}}{\leftrightarrow}}$ New, W:Add, Z:Discontinued, F:Interchangeable by set, K:Q'ty Change

Copyright (C) 2020 YANMAR GLOBAL CS CO., LTD. All RightsReserved.

Go to Discount-Equipment.com for your parts

Parts No. Index

Parts No.	Fig. No.	Ref. No.
114270-59010	14	9
	19	30
		34
		38
		42
		46
118400-77170	15	11
119609-32040	2	5
	20	23
119620-01750	3	3
119620-49290	11	35
119620-77380	16	3
119620-77421	16	6
119620-77440	16	11
119620-77461	16	12
119620-77471	16	13
119620-77480	16	18
119620-77490	16	14
119620-79200	16	7
119620-79210	16	8
119620-79220	16	9
119620-79230	16	10
119620-79250	16	5
119620-79260	16	16
119620-79280	16	19
119620-79290	16	20
119620-79300	16	21
119620-79310	16	23
119620-79320	16	24
119620-79330	16	25
119620-79340	16	26
119620-79350	16	27
119620-79360	16	28
119624-32040	2	6
	20	24
119640-01640	3	8
119640-61400	4	54
119660-01570	5	11
119761-39450	10	41
119802-03070	4	40
119802-11260	4	4
119802-11270	4	5
119802-21650	9	8
119802-25071	8	28
119802-77330	16	32
119803-21200	9	4
119803-77830	4	64
119865-21600	9	14
119934-01800	2	13
119940-77270	16	31

Parts No.	Fig. No.	Ref. No.
120130-11860	4	67
120270-54410	4	31
120445-44540	19	14
121111-21501	9	11
121450-42450	11	39
121520-34810	10	16
121550-23200	9	30
121850-21680	9	10
122780-59100	13	12
123501-79240	16	4
123900-13130	6	3
123907-03100	4	42
123907-03110	4	43
123907-03120	4	44
123907-03140	4	45
124060-01050	1	11
124160-01751	2	3
	4	36
124160-01910	1	12
		13
124160-11360	4	37
124195-77770	15	23
124240-01871	2	14
124395-49840	11	18
	20	32
124460-11340	4	25
	20	4
124465-44950	11	41
	20	29
128300-13230	19	1
	20	14
129001-01250	1	4
129001-02931	1	29
129004-03010	4	39
129004-11650	4	7
129004-34802	10	15
129004-42040	11	16
129005-03080	5	1
129005-11100	4	21
129006-44480	10	34
129008-77800	4	65
129052-79270	16	17
129067-33011	10	20
129100-01580	2	2
	3	1
		15
	9	2
129100-11112	4	22
129100-23910	9	33
129100-42051	11	4

Parts No.	Fig. No.	Ref. No.
129103-35122	10	23
129103-49301	11	12
129115-91250	19	55
129115-91270	19	57
129150-01200	1	27
129150-02020	1	6
129150-02450	8	4
129150-02871	1	32
129150-02931	1	24
129150-02941	1	35
129150-03070	4	41
129150-11230	4	8
129150-11280	4	6
129150-11370	4	12
129150-11750	4	10
129150-11810	4	68
129150-14200	8	1
129150-14400	8	2
129150-23601	9	31
129150-23611	9	34
129150-35042	10	17
	20	25
129150-35111	20	26
129150-35153	10	42
	19	11
129150-49811	11	31
	20	31
129155-49801	11	30
129165-49060	10	37
129202-22300	9	24
129238-35111	19	9
129240-79300	16	22
129240-79310	16	2
129242-55740	19	26
129242-77010	15	1
129242-77100	15	3
129242-77110	15	4
129242-77120	15	5
129242-77130	15	6
129242-77140	15	7
129242-77150	15	8
129242-77160	15	9
129242-77170	15	10
129242-77180	15	12
129242-77210	15	15
129242-77260	15	19
129242-77270	15	21
129242-77280	15	22
129350-49530	11	32
129400-01730	3	6

Parts No.	Fig. No.	Ref. No.
129410-03990	5	2
129417-33111	10	22
129417-35150	10	27
129418-18320	6	21
129423-77210	16	1
129423-77730	16	15
129436-35070	10	18
129467-49040	10	35
129486-01670	3	19
129486-32020	10	13
	20	22
129486-42021	11	15
	20	27
129486-42140	11	17
	20	28
129508-33050	10	21
129550-42350	11	24
129553-35500	10	28
129553-35520	10	30
129553-35530	10	31
129601-11241	4	1
129601-11251	4	2
129604-21000	9	1
129612-42350	11	25
129612-52100	19	15
129615-49050	10	38
129640-13580	19	3
129640-13590	19	2
129648-01600	3	16
129648-01780	3	18
129648-44771	11	27
129677-59501	14	1
129685-01350	1	28
	20	2
129688-01780	3	7
129688-35170	10	25
129698-77020	15	2
129698-77190	15	13
129698-77200	15	14
129698-77220	15	16
129698-77230	15	17
129698-77250	15	18
129795-01900	16	29
129795-01950	2	4
129795-02412	1	9
129795-11120	4	23
129795-11180	4	24
129795-21661	9	9
129795-49551	11	33
	20	30

Go to Discount-Equipment.com to order your parts

Parts No. Index

Parts No.	Fig. No.	Ref. No.
129900-07900	4	61
129900-07920	4	62
129916-44740	11	26
129927-13810	6	25
	20	16
129927-44900	11	40
129927-77910	19	53
129927-77920	19	54
129928-49420	11	13
		43
129928-79700	18	3
129930-13201	7	1
	20	13
129960-03990	11	46
		49
		52
129972-77341	16	33
129978-11871	4	29
	20	6
129978-12700	4	49
129978-17700	7	34
129A00-01500	2	1
129A00-01550	2	11
129A00-01602	3	2
129A00-11330	4	48
129A00-11340	4	26
	20	5
129A00-11900	4	30
129A00-12711	5	12
129A00-12721	5	7
129A00-12780	4	50
	20	8
129A00-12790	5	13
	20	9
129A00-12810	5	9
	20	10
129A00-12820	5	24
129A00-12830	5	14
129A00-12851	5	10
129A00-12900	5	25
129A00-12910	5	26
	20	11
129A00-13300	6	10
129A00-13350	6	12
	7	24
129A00-13360	4	51
129A00-13380	4	53
129A00-13400	6	15
129A00-13410	6	16
	20	15

Parts No.	Fig. No.	Ref. No.
129A00-13752	6	23
129A00-13770	6	7
129A00-13851	6	19
129A00-13861	6	20
129A00-13910	6	29
	20	17
129A00-13920	6	30
	20	18
129A00-14100	8	6
129A00-14701	8	8
129A00-14710	8	11
129A00-16600	7	14
	20	19
129A00-16610	7	15
129A00-16700	7	17
129A00-16730	7	19
129A00-16740	7	20
129A00-17300	7	25
129A00-17311	7	26
	20	20
129A00-17350	7	27
129A00-17520	7	30
129A00-17551	7	32
129A00-17570	7	33
129A00-17760	7	35
129A00-21710	3	21
129A00-22500	9	18
129A00-22950	9	38
129A00-25050	8	13
129A00-25060	8	21
129A00-25080	8	29
129A00-25110	8	14
129A00-25120	8	22
129A00-25200	8	25
129A00-25210	8	26
	20	21
129A00-25900	8	18
129A00-49610	11	44
129A00-51100	12	2
129A00-51110	12	3
129A00-51120	12	4
129A00-51130	12	5
129A00-51200	12	6
129A00-51900	12	7
	20	33
129A00-53100	13	1
129A00-53200	13	4
129A00-55600	19	16
129A00-55610	19	17
129A00-55720	19	24

Parts No.	Fig. No.	Ref. No.
129A00-55730	19	25
129A00-55740	19	27
129A00-55751	19	21
129A00-55760	19	22
129A00-55770	19	28
129A00-55800	19	18
129A00-57100	13	8
129A00-57200	13	9
129A00-57210	13	10
129A00-59020	14	4
129A00-59110	5	15
129A00-59120	5	16
129A00-59700	13	14
129A00-59820	13	19
129A00-59830	13	23
129A00-75910	17	12
129A00-77930	18	1
129A00-91200	6	8
	7	38
	14	12
129A00-91430	7	40
129A00-91451	18	19
129A00-91600	18	20
129A01-13601	6	4
129A01-13700	6	6
129A01-42001	11	1
129C00-01560	1	1
129C00-11310	4	47
	20	3
129C00-11360	4	38
129C00-12100	5	5
129C00-12110	5	3
	20	7
129C00-12150	5	4
129C00-13100	6	1
129C00-13110	6	2
	20	12
129C00-13800	6	24
129C00-13870	7	3
129C00-13880	7	4
129C00-13901	6	28
129C00-14580	8	3
129C00-16400	7	11
129C00-17500	7	29
129C00-22080	9	16
129C00-22900	9	36
129C00-32000	10	1
129C00-49610	11	48
129C00-49620	11	51
129C00-57000	13	7

Parts No.	Fig. No.	Ref. No.
129C00-59030	14	8
129C00-59810	13	17
129C00-59820	13	21
129C00-77820	4	66
129C00-91200	7	39
129C00-91223	18	4
129C00-91232	18	14
129C01-16690	7	16
129C20-11700	4	13
129C20-16090	7	5
129C20-16290	7	6
129C20-16700	7	18
129C20-21560	9	12
129C20-75061	17	1
129C20-92620	20	1
129C21-59010	19	29
129C21-59020	19	33
129C21-59030	19	37
129C21-59040	19	41
129C21-59050	19	45
129C21-59060	19	49
129C22-16500	7	13
129C23-49700	11	55
129C28-51000	12	1
129C28-53300	13	6
129E00-13620	6	18
129E00-55710	19	20
129E22-55700	19	19
129F01-13600	6	17
129F01-13630	6	5
171031-11741	2	9
171051-01921	1	5
172B02-17150	19	8
22117-100000	19	4
22190-080002	2	15
	20	34
22190-120002	11	42
	20	35
22190-140002	5	17
	20	36
22190-220002	3	10
	20	37
22217-100000	19	5
22217-180000	8	19
22252-000260	9	25
22351-030010	9	7
22351-060012	4	32
22512-070140	8	7
	9	5
22857-500100	4	56

Go to Discount-Equipment.com to order your parts

Parts No. Index

Parts No.	Fig. No.	Ref. No.
22857-500100	4	57
23000-022000	10	39
23080-007000	14	3
23080-015000	14	7
	19	52
23297-080061	6	11
23414-080000	11	19
	20	38
23414-120000	6	13
	20	39
23875-040000	10	33
24190-130002	10	32
24311-000120	4	59
	20	40
24311-000320	2	7
		10
	4	60
	20	41
24321-000600	19	58
26106-060102	8	9
26106-060122	6	14
26106-060162	7	36
26106-060202	5	27
26106-060222	11	28
26106-060402	5	28
26106-060902	5	29
26106-080122	11	20
	18	21
		22
		23
26106-080142	7	21
	8	10
26106-080162	2	8
		16
	3	11
	4	63
	11	21
		29
		56
26106-080202	7	37
26106-080222	11	34
26106-080252	3	12
	4	33
	6	26
	10	40
	13	11
26106-080302	12	8
26106-080352	2	17
	3	20
	4	34

Parts No.	Fig. No.	Ref. No.
26106-080402	2	18
	8	27
26106-080452	3	13
	8	17
	11	22
	16	34
26106-080502	3	14
	4	35
	5	8
		20
	6	22
26106-080552	10	19
26106-080602	2	19
	11	23
26106-080752	5	21
26106-080852	2	20
26106-080952	19	59
26106-100652	19	6
26106-120252	15	24
26206-100252	3	4
26206-100302	3	5
26216-060202	5	6
26216-080302	5	18
26216-081052	5	22
26226-080182	4	11
26306-080002	5	23
	6	27
		31
	7	22
26306-100002	6	9
	16	30
26366-060002	13	25
26450-060162	3	22
	4	58
	8	12
26450-060252	10	14
26706-100002	19	7
26716-060002	5	19
26776-180002	8	20
27241-120000	1	14
27241-300000	1	10
27241-400000	4	20
27310-080001	4	27
29621-100000	18	24
29621-200000	18	25
720445-44200	19	12
729402-23100	9	26
X2114535200	15	20

Parts No.	Fig. No.	Ref. No.

Parts No.	Fig. No.	Ref. No.

Go to Discount-Equipment.com to order your parts

www.discount-equipment.com

2020年 12月 24日　初版

2024年　8月 20日　改訂

HOKUETSU INDUSTRIES CO., LTD.

Copyright(C)2020 HOKUETSU INDUSTRIES CO., LTD. All Rights Reserved.

Go to Discount-Equipment.com to order your parts

2408-04
CAT.NO.39520 87000

Go to Discount-Equipment.com to order your parts

AIRMAN
HOKUETSU INDUSTRIES CO., LTD.

PARTS FINDER

Search Website by Part Number

Discount Equipment

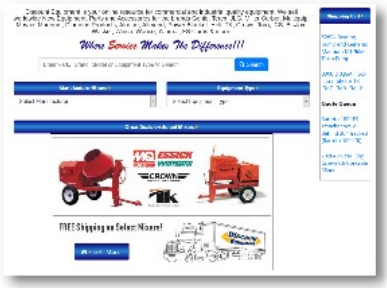

Search Manual Library For Parts Manual & Lookup Part Numbers – Purchase or Request Quote

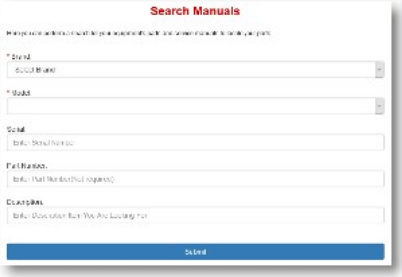

Can't Find Part or Manual? Request Help by Manufacturer, Model & Description

Discount-Equipment.com is your online resource for quality parts & equipment.

Florida: 561-964-4949 Outside Florida TOLL FREE: 877-690-3101

Need parts?

Click on this link: http://www.discount-equipment.com/category/5443-parts/ and choose one of the options to help get the right parts and equipment you are looking for. Please have the machine model and serial number available in order to help us get you the correct parts. If you don't find the part on the website or on one of the online manuals, please fill out the request form and one of our experienced staff members will get back to you with a quote for the right part that your machine needs.

We sell worldwide for the brands: Genie, Terex, JLG, MultiQuip, Mikasa, Essick, Whiteman, Mayco, Toro Stone, Diamond Products, Generac Magnum, Airman, Haulotte, Barreto, Power Blanket, Nifty Lift, Atlas Copco, Chicago Pneumatic, Allmand, Miller Curber, Skyjack, Lull, Skytrak, Tsurumi, Husquvarna Target, Stow, Wacker, Sakai, Mi-T-M, Sullair, Basic, Dynapac, MBW, Weber, Bartell, Bennar Newman, Haulotte, Ditch Runner, Menegotti, Morrison, Contec, Buddy, Crown, Edco, Wyco, Bomag, Laymor, EZ Trench, Bil-Jax, F.S. Curtis, Gehl Pavers, Heli, Honda, ICS/PowerGrit, IHI, Partner, Imer, Clipper, MMD, Koshin, Rice, CH&E, General Equipment ,Amida, Coleman, NAC, Gradall, Square Shooter, Kent, Stanley, Tamco, Toku, Hatz, Kohler, Robin, Wisconsin, Northrock, Oztec, Toker TK, Rol-Air, APT, Wylie, Ingersoll Rand / Doosan, Innovatech, Con X, Ammann, Mecalac, Makinex, Smith Surface Prep,Small Line, Wanco, Yanmar